orval.com.tr

ORVAL HYDRAULIC

PRODUCT CATALOG

ORIGINAL VALVE



ORIGINAL VALVE

ORVAL HYDRAULIC

INDEX

MONOBLOCK DIRECTIONAL CONTROL VALVES

ORV-M40 555
ORV-M45 555
ORV-MS45 555
ORV-M70 555
ORV-M80 555
ORV-M100 555

SECTIONAL VALVES

ORV-PD45 555
ORV-PD60 555
ORV-PD80 555
ORV-PD100 555
ORV-PD120 555
ORV-PD150 555
ORV-PD250 555

SPECIAL TRACTOR VALVES

ORV-TV50 555
ORV-DMF 555
ORV-MF 555
ORV-STEYR 555
ORV-FRD3 555
ORV-FRD5 555
ORV-FIAT 555

SELENOID DIRECTIONAL CONTROL VALVES

ORV-4WE6 555
ORV-4WE10 555

TIPPER VALVE

ORV-KMW 555
ORV-RSV 555
ORV-2B 555
ORV-3B 555
ORV-4B 555
ORV-K 555

HAND PUMP

ORV-HP 555

THREE WAY VALVES

ORV-V 555

ORVAL HYDRAULIC

HAKKIMIZDA

ORVAL HİDROLİK Endüstride ve sanayide kullanılan ve üretilen makine, sistem ve ekipmanları, Tarim aletleri, denizcilik sektörleri, mobil vinçler, çöp kamyonları gibi sektörlerde önemli yer tutan hidrolik yön kontrol valfleri ile ilgili tüm ihtiyaçlarları karşılayabilmek amacıyla 1996 yılında kurulmuştur.

Kurulduğu yıldan bu yana dünyanın ulaşmış olduğu en son teknolojiyi, bu teknolojilerin uygulanması için gerekli bilgi ve ürün tedarikini sağlayarak, faaliyet gösterdiği Hidrolik ürünlerin imalatı konularında faaliyet göstermektedir.

En iyi hizmet, en iyi müşteri memnuniyeti, en iyi piyasa ilişiklerinin sağlanması hedefi ile uzun süreler Türk ve Dünya endüstrisine katkıda bulunmak ve ihtiyaçlara ''Çözüm ortağı, Teknoloji Partneri'' ile buluşturmaktan mutluluk duyarız.

ABOUT US

ORVAL HYDRAULIC was established in 1996 in order to meet all the demands related to hydraulic directional control valves, which have an important role in sectors such as machinery and machine systems and equipment used and produced in industry, agricultural tools, maritime sectors, mobile cranes, garbage trucks.

Since its establishment, it has been operating in the production of hydraulic products, by providing the latest technology that the world has reached, the information and product supply necessary for the application of these technologies.

With the aim of providing the best service, the best customer satisfaction and the best market relations, we are happy to contribute to the Turkish and World industry for a long time and to meet the needs with "Solution Partner, Technology Partner".

ORVAL HYDRAULIC

ORVAL HYDRAULIC

MONOBLOCK DIRECTIONAL CONTROL VALVES

ORV-M40

CE



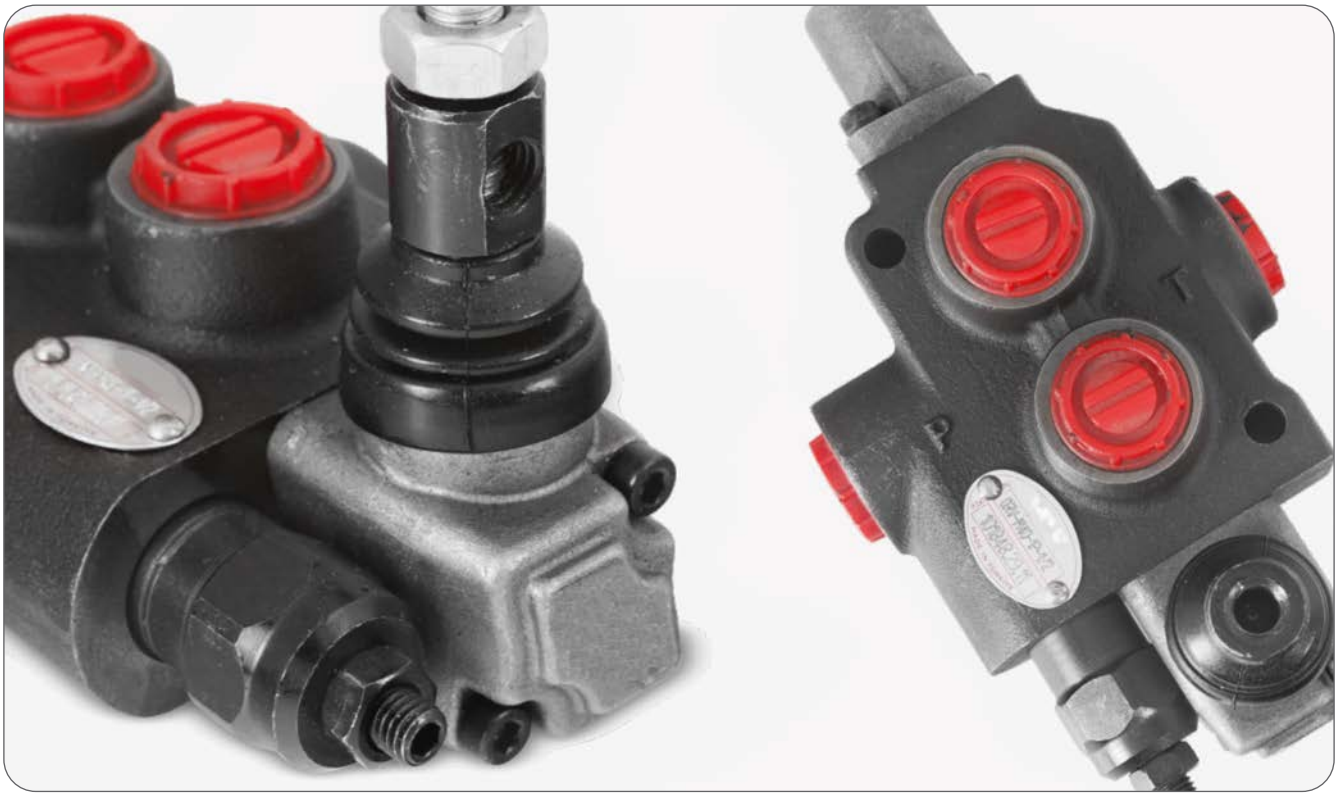

CONTENTS

Working Conditions	3
Dimensional Data	3
Hydraulic Circuit	3
Performance Data And Curve	3
Inlet Relief Options	3
Ordering Codes	3
Spool Options	3
Installation and Maintenance	3
Technical Data	3

Additional Informations

Note: This catalog shows the product in the most standard configurations. For Other Configurations, more detailed information or special request, Please contact Customer Service Dpt.

Warning!: All specifications of this catalog refer to the standard product at this date (01/2011). ORVAL, oriented to a continuous improvement, reserves the right to discontinue, modify or revise the specifications, without notice.

ORVAL IS NOT RESPONSIBLE FOR ANY DAMAGE CAUSED BY
AN INCORRECT USAGE OF THE PRODUCT.

WORKING CONDITIONS

Nominal Flow Rating / Displacement	40 l/min	11 U.S.G.P.M
Maximum Working Pressure	250 Bar	3600 PSI
Max Back Pressure	25 Bar	360 PSI
Oil Temperture with NBR Seals	-20 to 80 C°	4 to 180 F °
with FPM (Viton) Seals	-20 to 100 C°	4 to 200 F °
Oil Viscosity – Operating Range	From 10 to 75 mm2/s	From 10 to 75 cSt
Minumum / Maximum	10 / 400 mm2/s	10 / 400 cSt
Oil Filtration	≤30 µ	
Ambiant Temperture Range	-35 to 60 C°	-11 to 160 F °
Number Of Spools	1	
İnternal Leakage (at 100 bar (1450 PSI), 40C° (110 F°), 46 cSt – A(B)–T)	4 cm3/min	0,24 in3/min
Max. Level Of Contamination	19/16 - ISO 4406	

Not: This catalogue shows technical specifications measured with mineral oil of 46 mm2/s-46 cSt viscosity at 40 C° temparture.

Features

- This valve is only one section for open center and close center hydraulic systems.
- Fitted with a main pressure relief valve.
- Interchangeable spool diametre is 16 mm – 0,63 in.
- Avaible manual and pneumatic spool control kits.

DIMENSIONAL DATA

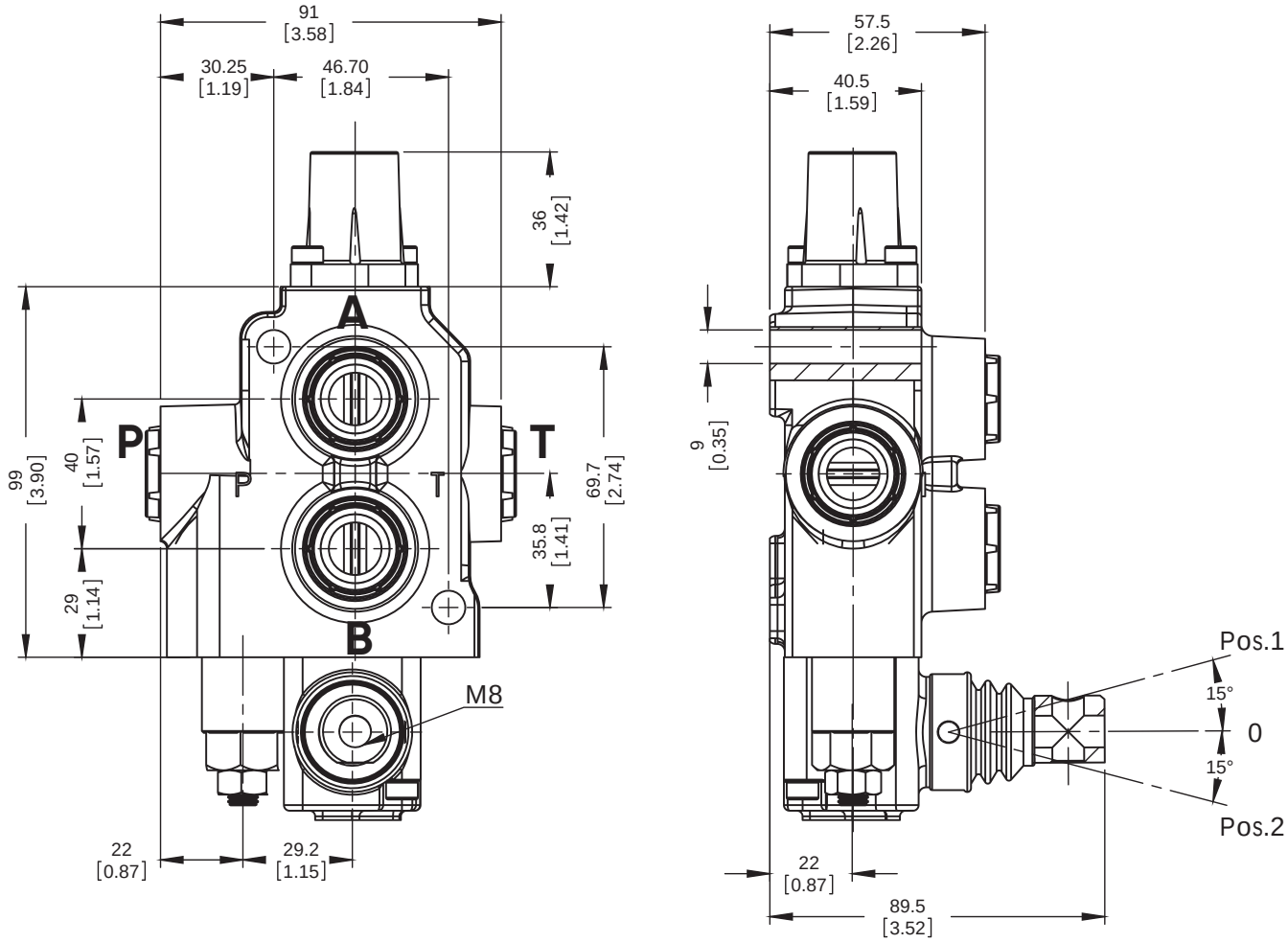

STANDARD THREADS

PORT	BSP (Iso 228) 3/8" Series	BSP (Iso 228) ½"Series	UN-UNF (Iso 11926-1)	Metric (Iso 262)	Kg
P Inlet	G 3/8	G 1/2	3/4-16 UNF	M18x1.5	2,21 Kg
A-B Ports	G 3/8	G 1/2	9/16-18 UNF	M18x1.5	2,21 Kg
T Outlet	G 3/8	G 1/2	3/4-16 UNF	M18x1.5	2,21 Kg
Pneumatic	G 1/4	G 1/4	NPTF 1/8 - 27	NPTF 1/8 - 27	2,21 Kg

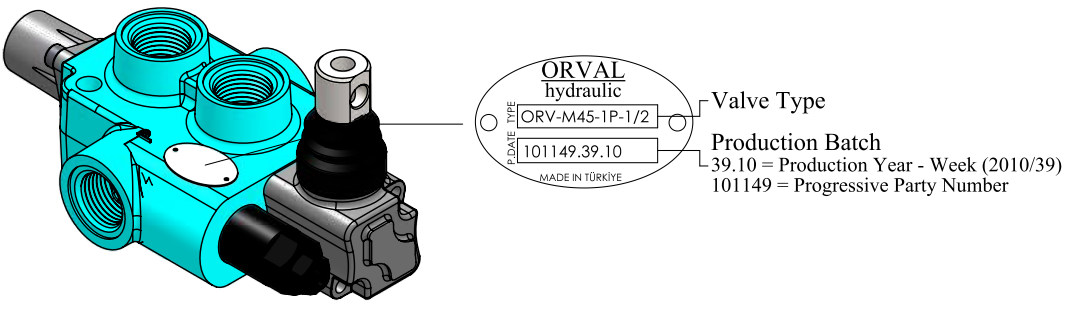

HYDRAULIC CIRCUIT

Standard Configurations With Side Inlet And Outlet Ports (1CP) - LH

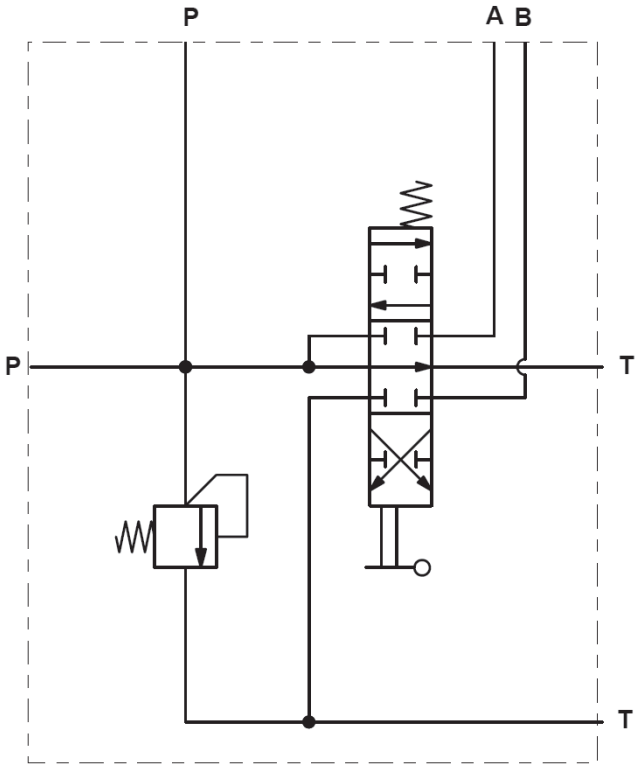

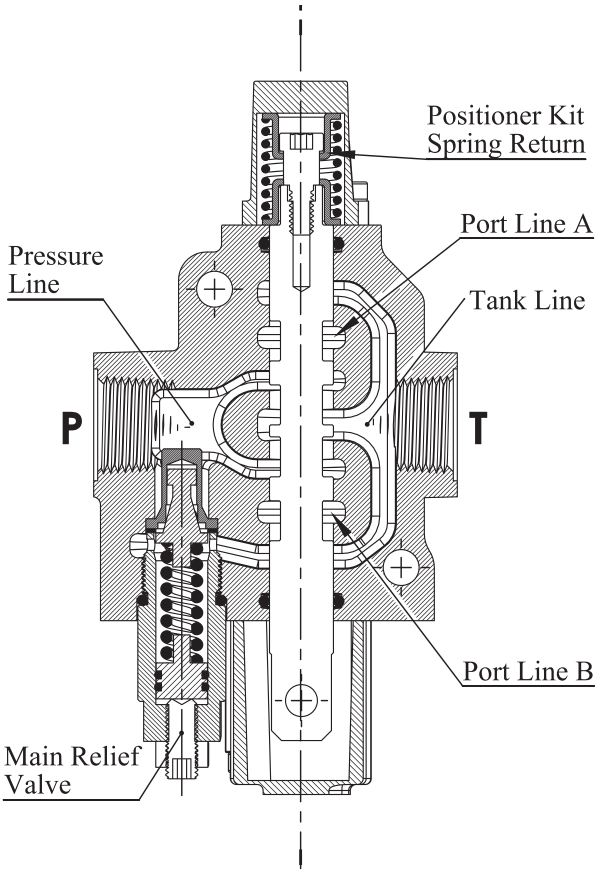

Code: ORV M40-1P / SMR2-120 / 1A-SR-STL

Standard Configurations (1CP) – RH (Right Inlet)

A symetrical body allows the reverse assembly of spool and this with connected control kit (RH Configuration).

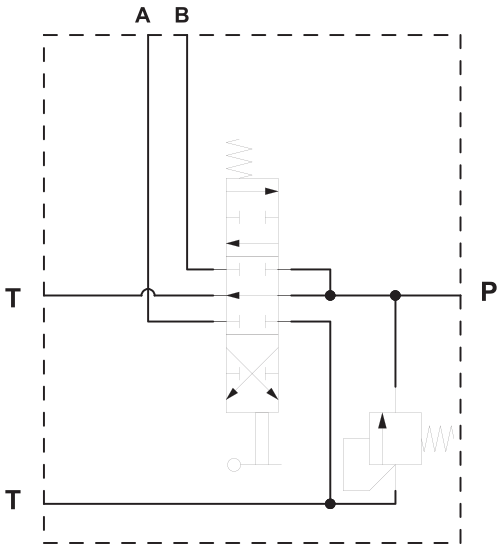

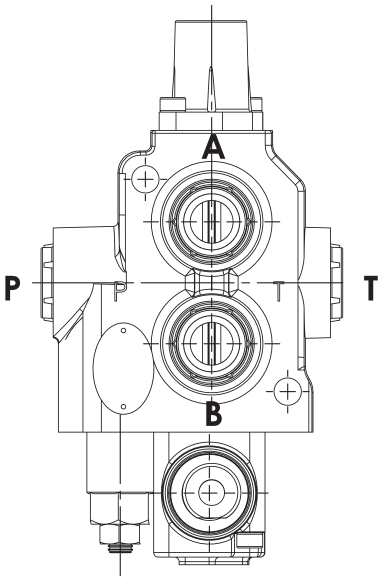

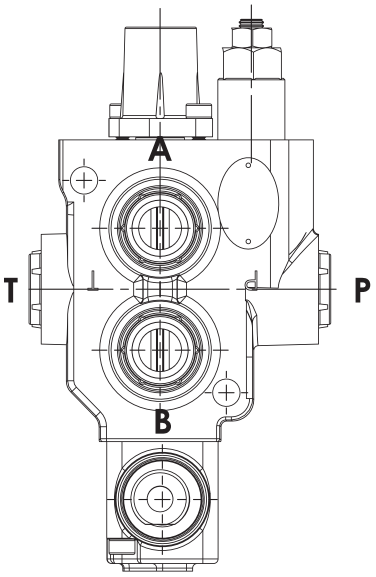

Code: ORV M40-1P / SMR2-120 / (RH)1A-SR-STL

PERFORMANCE DATA AND CURVE

Open Center - Pressure Drop (P-T)

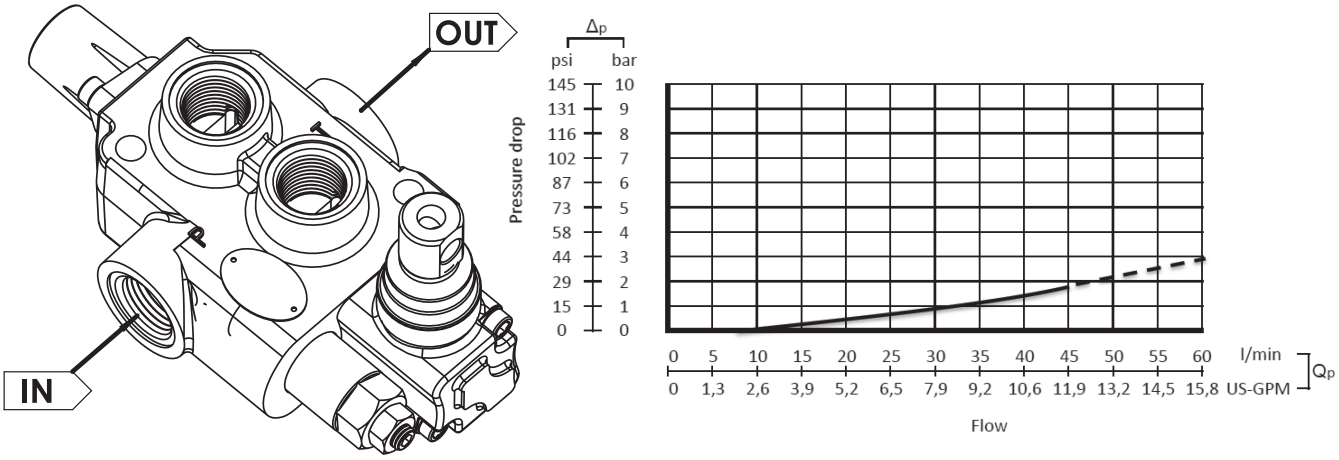

Inlet to Work Port - Pressure Drop (P-A/B)

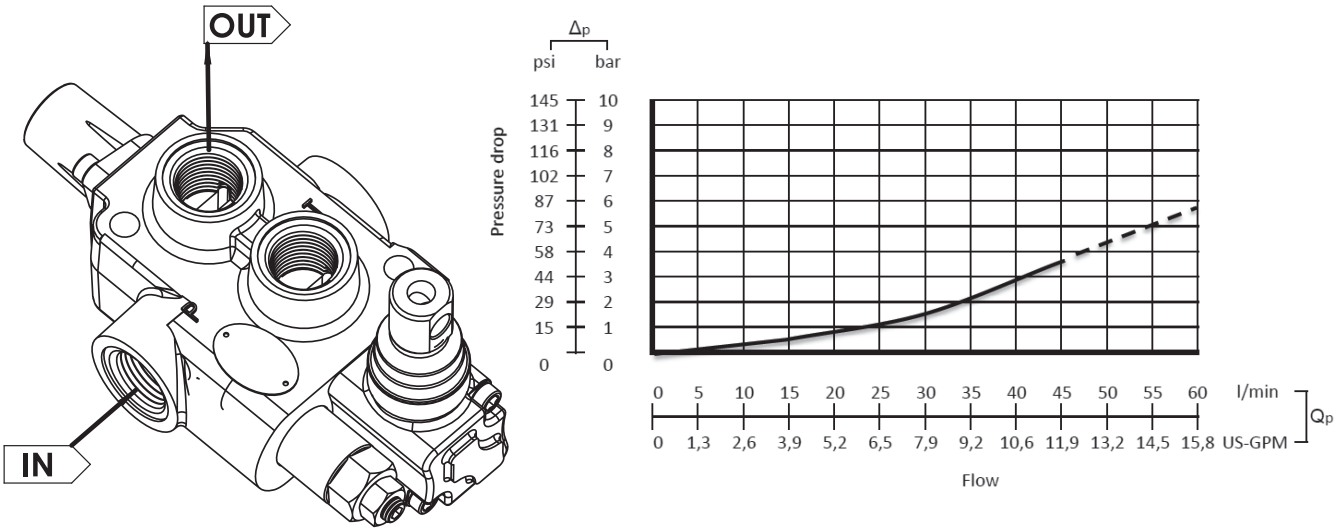

Work Port to Outlet - Pressure Drop (A/B-T)

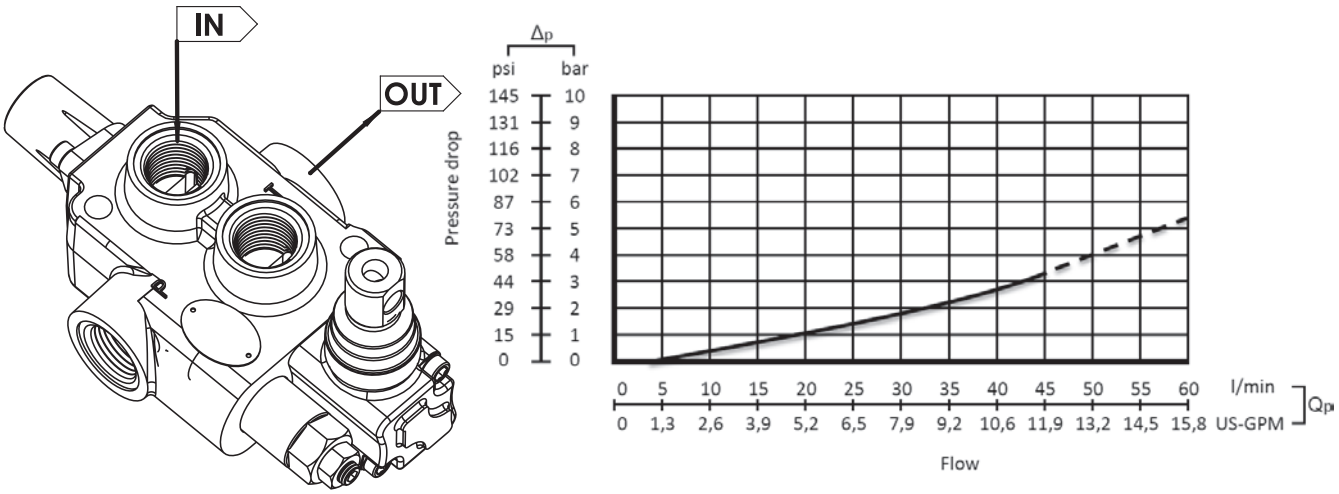

Note: Measured and chart value with spool type 1A.

INLET RELIEF OPTIONS

Direct Pressure Relief Valve

Code:

SMR2 – 120

- Pressure Setting Bar in (Standard 120 bar)
- Standard Main Relief Spring Type -2

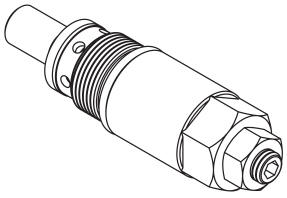

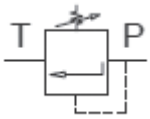

Performance Data

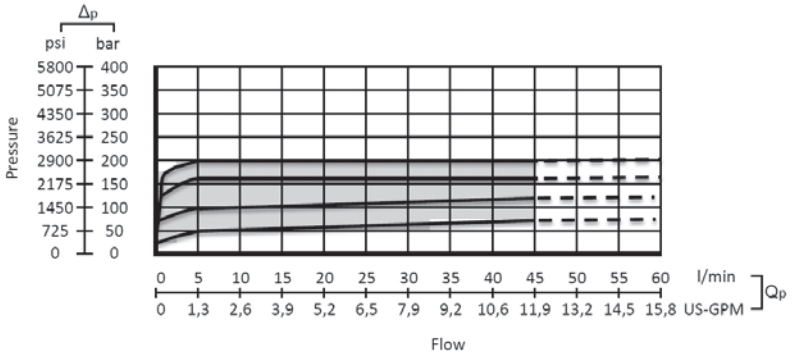

Spring Type Number: 2
Setting= 120 Bar - Range=60-200 Bar

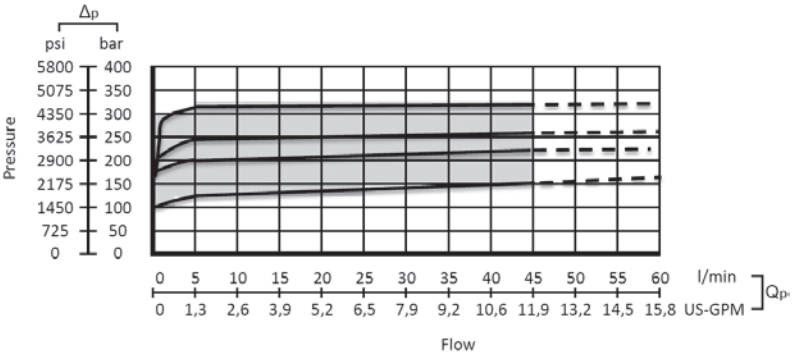

Spring Type Number: 3
Setting= 220 Bar -Range=160-250 Bar

Adjustment Type on Valve

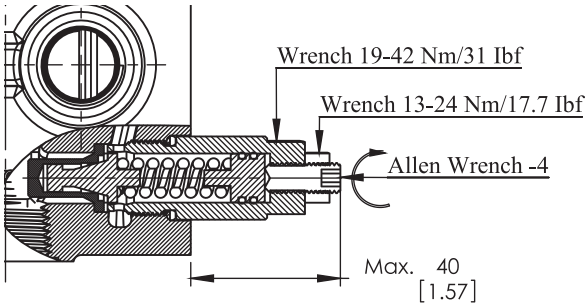

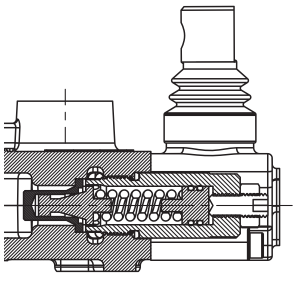

Relief Blanking Plug - WM

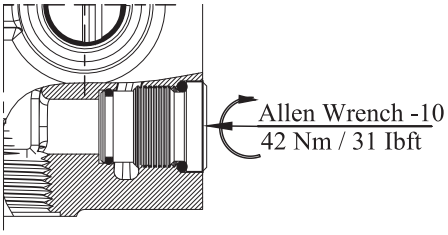

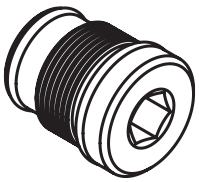

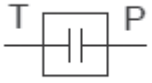

ORDERING CODES

Order Sample

ORV M40-1P / SMR2-120 / 1A-SR-STL / PL1-SGT

1 | 2 | 3 4 5 (1 st Section) | 6 7

1- Valve Type and Body

M40 = Valve Type - (M) - Monoblok
(40) - Max. Flow Rate
1P = Body Section - (1BM140100)

2- Pressure Relief Options

SMR = Standard direct pressure relief valve
SMR1-080 – (2SMR140080)–Range 0-80 bar
Setting 80 bar
SMR2-120 – (2SMR240120)– Range 60-200 bar
Setting 120 bar
SMR3-220 – (2SMR340220)–Range 160-250 bar
Setting 220 bar
SP = Standard relief plug – (2SP040100)

3- Spool Options

1A -(3SM140110) – 3 Positions, Double acting
2A -(3SM140120) – 3 Positions, Double acting
A to tank B Blocked
3A -(3SM140130) – 3 Positions, Double acting
B to tank A blocked
4A -(3SM140140) – 3 Positions, Double acting
A and B tank
5A -(3SM140150) – 3 Positions, Single acting on
A (A to tank)
6A -(3SM140160) – 3 Positions, Single acting on
B (B to tank)

4- Spool Positioners

SR = Spring Return in neutral position – (4SR040100)
D = Detent in position 1, neutral and 2 - (4D040100)

5- Lever Options

STL = Standard Lever – (5STL040100)

6- Port and Output Options "If Required"

PL1(5A) = Plug for single action spool 5A -
G1/2"- (6PL1040112)
PL1(6A) = Plug for single action spool 6A -
G1/2"- (6PL2040112)
*Page 11 for detail spool options.

7- Ports Thread Options

SGT1 = 1/2" Series Port Options - (7P040112)
SGT2 = 3/8" Series Port Options - (7P040138)
UNF = UNF Series Port Options - (7U040100)
M = Metric Series Port Options - (7M040100)
*Page 4 for detail port information.

HandLever

L = Standard HandLever (L=120mmxM8) - (7L040100)

ORDERING CODES

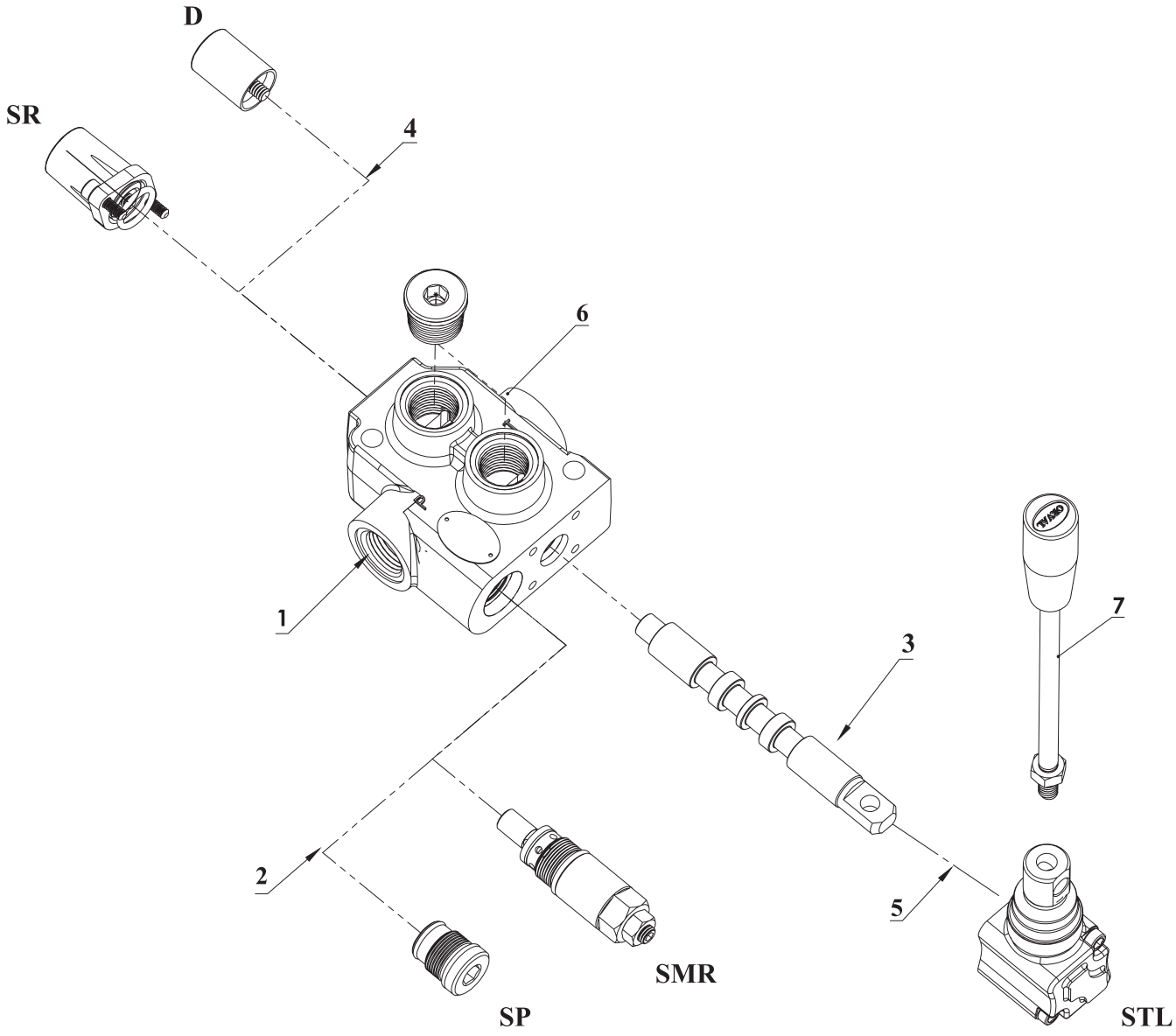

SPOOL OPTIONS

Spool Type - 1A

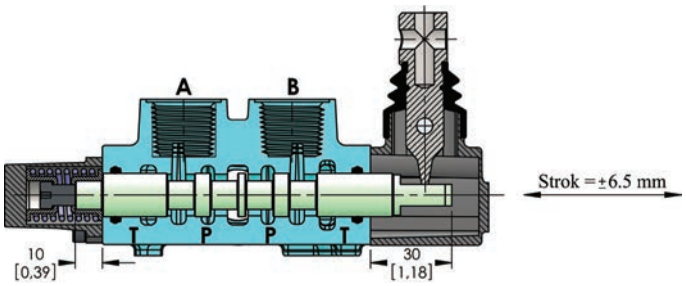

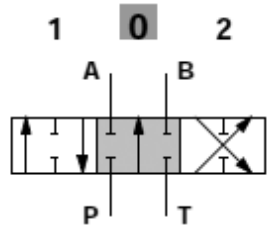

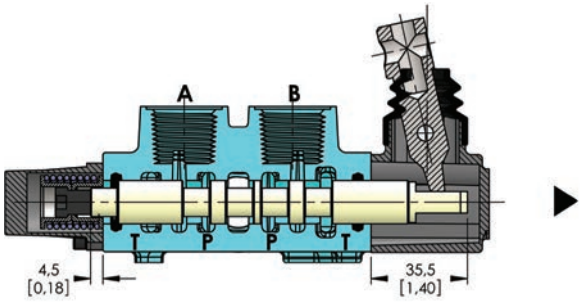

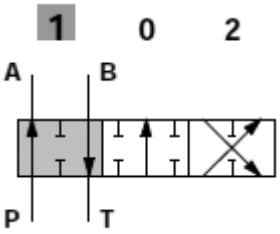

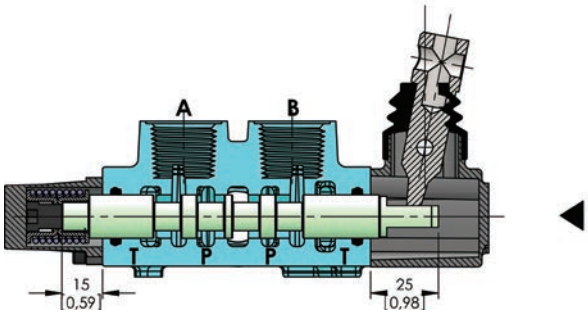

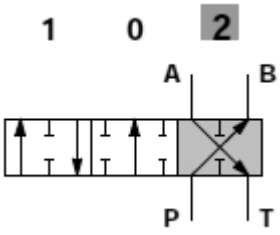

Spool Type - 2A

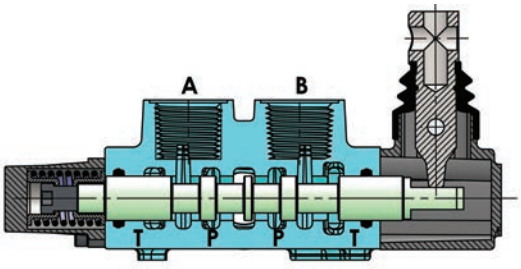

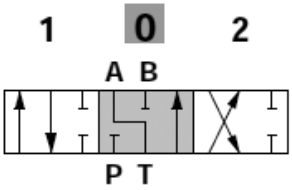

SPOOL OPTIONS

Spool Type - 3A

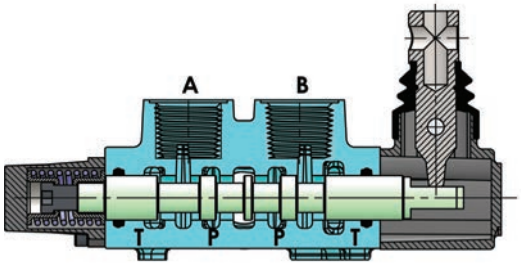

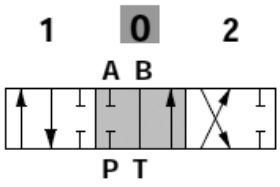

Spool Type - 4A

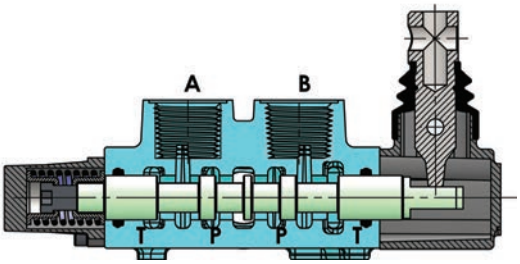

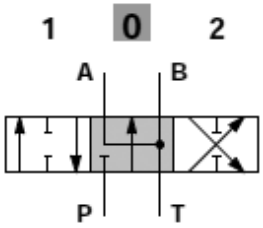

Spool Type - 5A

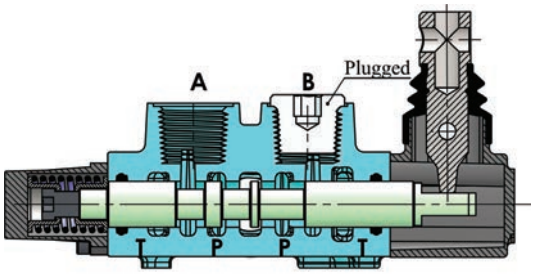

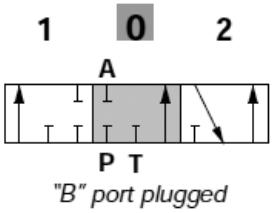

"B" port plugged

Spool Type - 6A

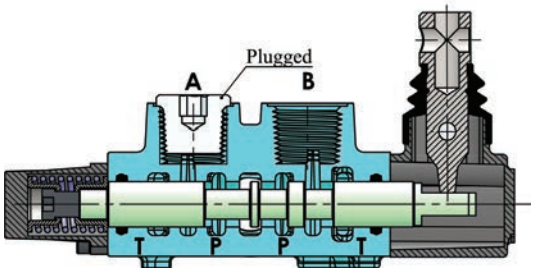

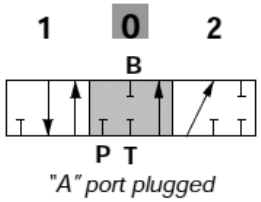

"A" port plugged

SPOOL OPTIONS

Spool Positioners – Side of Return

Kit No: **SR**

Sectional Appearance

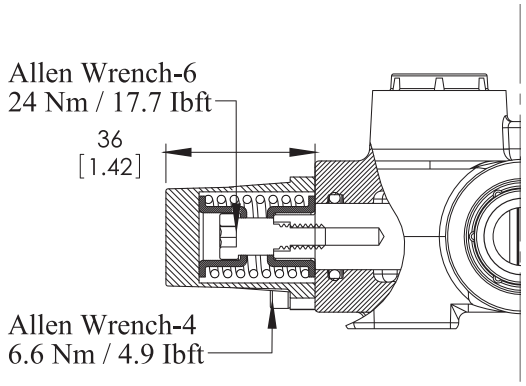

Diagram



Kit No: **D**

Sectional Appearance

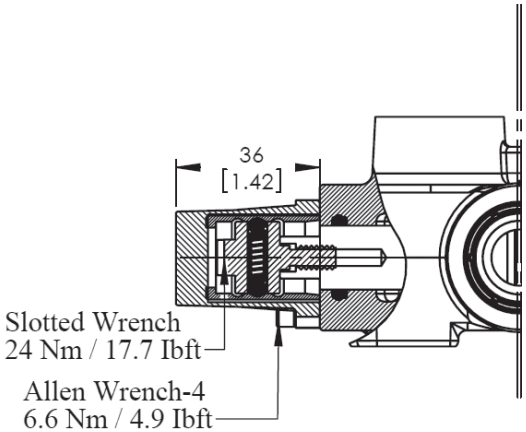

Diagram

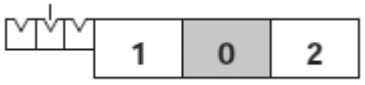

Force - stroke diagram

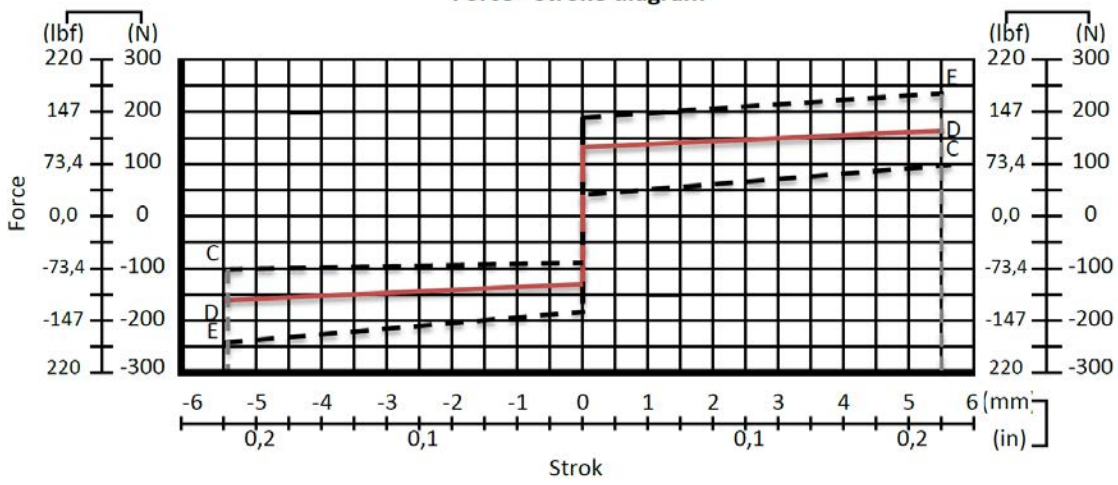

INSTALLATION AND MAINTENANCE

The ORV-M40 valve is assembled and tested as per the technical specification of this catalog. Before the final installation on your equipment, follow the below recommendation:

• The valve can be assembled in any position, in order to prevent body deformation and spool sticking mount the product on a flat surface;

• In order to prevent the possibility of water entering the lever box and spool control kit, do not use high pressure wash down directly on the valve;

• Before painting, ensure plastic port plugs are tightly in place.

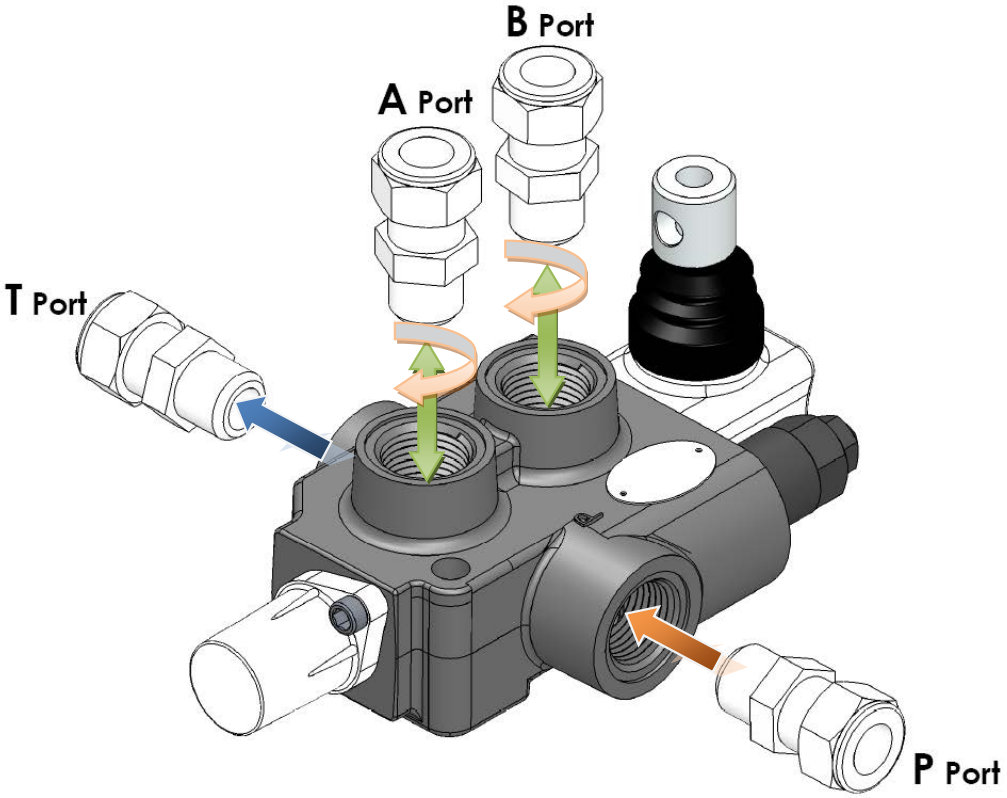

Ports Fitting Tightening Torque - Nm / lbft

Threads Type (Nm / lbft)	P Port	A and B Port	T Port
BSP (ISO 228/1)	G 3/8	G 3/8	G 3/8
With O--Ring seal	35 / 25.8	35 / 25.8	35 / 25.8
With copper washer	40 / 29.5	40 / 29.5	40 / 29.5
With steel and rubber washer	30 / 22.1	30 / 22.1	30 / 22.1
BSP (ISO 228/1)	G 1/2	G 1/2	G 1/2
With O--Ring seal	50 / 36.9	50 / 36.9	50 / 36.9
With copper washer	60 / 44.3	60 / 44.3	60 / 44.3
With steel and rubber washer	60 / 44.3	60 / 44.3	60 / 44.3
UN--UNF (ISO 11926--1)	3/4--16 UNF--2B	9/16--18 UNF--2B	3/4--16 UNF--2B
With O--Ring seal	50 / 36.9	30 / 22.1	50 / 36.9
METRIC (ISO 262)	M18 x 1.5	M18 x 1.5	M18 x 1.5
With O--Ring seal	35 / 25.8	35 / 25.8	35 / 25.8
With copper washer	40 / 29.5	40 / 29.5	40 / 29.5
With steel and rubber washer	40 / 29.5	40 / 29.5	40 / 29.5

TECHNICAL DATA

Ports Dimensional Data

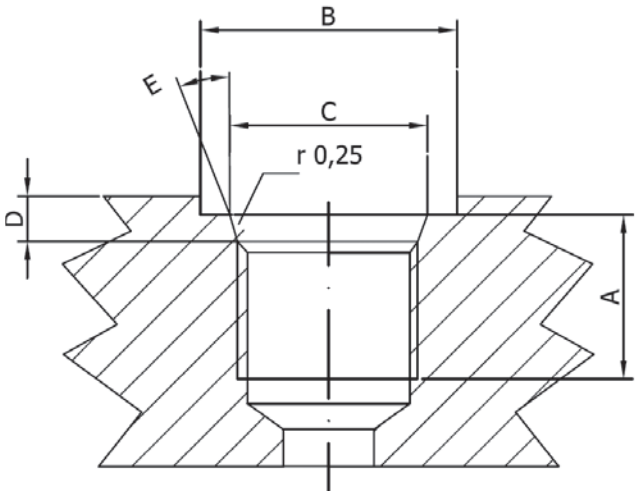

SAE UN-UNF (ISO 725)						
Dimensions		9/16-18 UNF SAE6		3/4-16 UNF SAE8		7/8-14 UNF SAE10
mm	in					
A		13	0,51	15	0,59	17	0,67
B		25	0,83	30	1,18	34	1,34
C		13,6	0,61	20,6	0,81	23,9	0,94
D		2,5	0,10	2,5	0,10	2,5	0,10
E		15°		15°		15°	

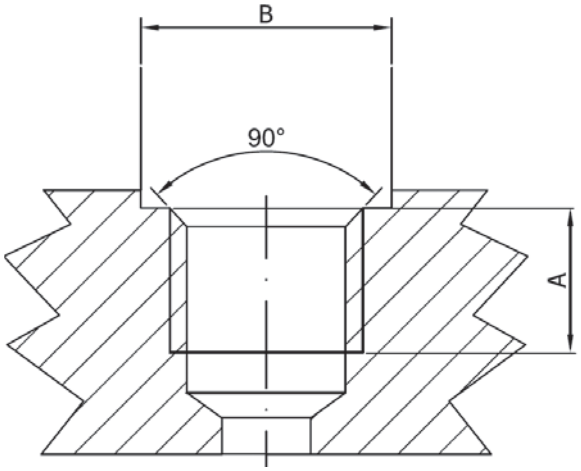

BSP (ISO 228)						
Dimensions		G1/4		G3/8		G1/2
mm	in					
A		14	0,55	14	0,55	16	0,63
B		19	0,75	23	0,91	27	1,06

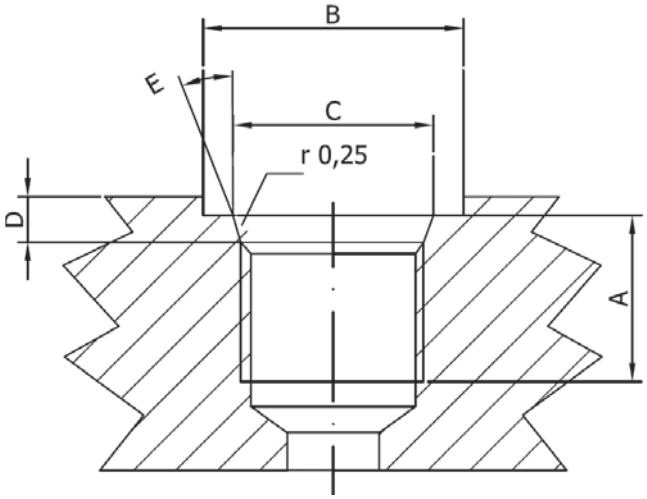

METRIC (ISO 262)					
Dimensions		M18x1,5 ISO 262		M22x1,5 ISO 262	
mm	in				
A		14	0,55	16	0,63
B		27,5	1,08	31,5	1,24

ORVAL HYDRAULIC

MONOBLOCK DIRECTIONAL CONTROL VALVES

ORV-M45

CE

TÜV International Certification
TÜV THÜRINGEN CERT AZAV 15 190 17185 TIC



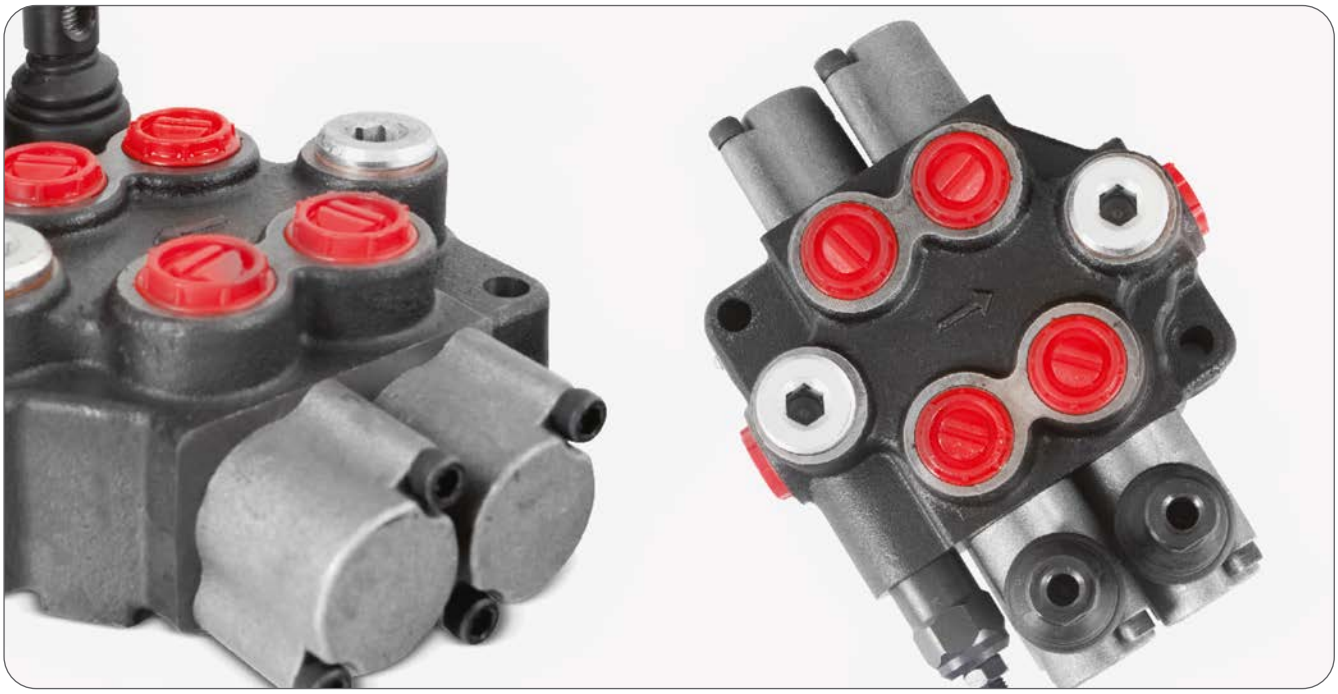

CONTENTS

Working Conditions	3
Dimensional Data	3
Hydraulic Circuit	3
Performance Data And Curve	3
Inlet Relief Options	3
Ordering Codes	3
Spool Options	3
Spool Positioners – Side of Return	3
Spool Positioners – Side of Lever Control	3
Spool Positioners – Side of Lever Control	3
Outlet Port Options	3
Installation and Maintenance	3
Technical Data	3

Additional Informations

Note: This catalog shows the product in the most standard configurations. For Other Configurations, more detailed information or special request, Please contact Customer Service Dpt.
Warning!: All specifications of this catalog refer to the standard product at this date (01/2020). ORVAL, oriented to a continuous improvement, reserves the right to discontinue, modify or revise the specifications, without notice.

ORVAL IS NOT RESPONSIBLE FOR ANY DAMAGE CAUSED BY
AN INCORRECT USE OF THE PRODUCT.

WORKING CONDITIONS

Nominal Flow Rating / Displacement	45 l/min	12 U.S.G.P.M
Maximum Working Pressure	315 Bar	4600 PSI
Max Back Pressure	25 Bar	360 PSI
Oil Temperture with NBR Seals	-20 to 80 C°	-4 to 176 F °
with FPM (Viton) Seals	-20 to 100 C°	-4 to 212 F °
Oil Viscosity – Operating Range	From 10 to 75 mm2/s	From 10 to 75 cSt
Minumum / Maximum	10 / 400 mm2/s	10 / 400 cSt
Oil Filtration	≤30 µ	
Ambiant Temperture Range	-35 to 60 C°	-31 to 140 F °
Number Of Spools	1 to 6	
İnternal Leakage (at 100 bar (1450 PSI), 40C° (110 F°), 46 cSt – A(B)–T)	3 cm3/min	0,18 in3/min
Max. Level Of Contamination	19/16 - ISO 4406	

Not: This catalogue shows technical specifications measured with mineral oil of 46 mm2/s-46 cSt viscosity at 40 C° temparture.

Features

- Simple, compact and heavy duty designed monoblock valves from 1 to 6 sections for open and closed center hydraulic systems.
- Optionaly Carry-Over port only tandem circuit.
- Fitted with a main pressure relief valve.
- Interchangeable spool diametre is 16 mm – 0,63 in.
- Available manual, pneumatic, hydraulic and electro-pneumatic spool control kits.

DIMENSIONAL DATA

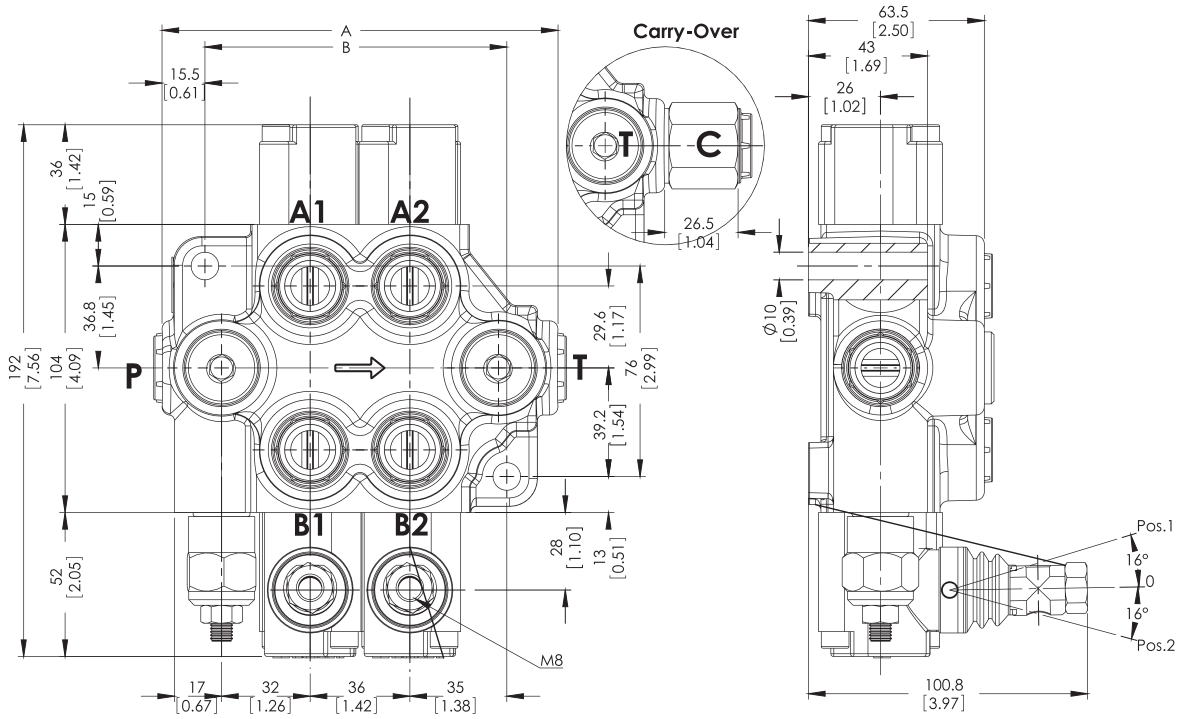

TYPE	A		B		Weight	
	mm	in	mm	in	Kg	lb
ORV-M45-1P	103	4,06	73	2,87	3.18	7,01
ORV-M45-2P	139	5,47	109	4,29	4.84	10,67
ORV-M45-3P	175	6,89	145	5,71	6.50	14,33
ORV-M45-4P	211	8,31	181	7,13	8.16	17,99
ORV-M45-5P	247	9,72	217	8,54	9.82	21,65
ORV-M45-6P	283	11,14	253	9,96	11.48	25,31

STANDARD THREADS

PORT	BSP (Iso 228) 3/8" Series	BSP (Iso 228) ½"Series	UN-UNF (Iso 11926-1)	Metric (Iso 262)
P Inlet	G 3/8	G 1/2	3/4-16 UNF	M18x1.5
A-B Ports	G 3/8	G 1/2	9/16-18 UNF	M18x1.5
T Outlet	G 1/2	G 1/2	3/4-16 UNF	M18x1.5
Pneumatic	G 1/4	G 1/4	NPTF 1/8 - 27	NPTF 1/8 - 27

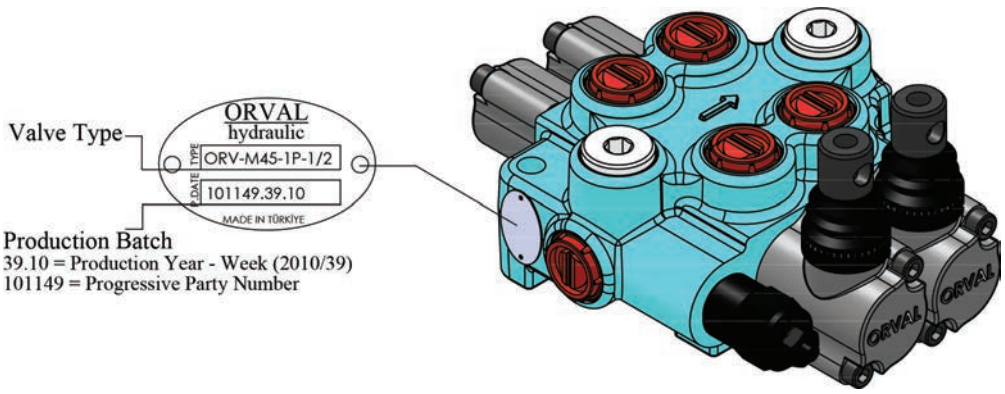

HYDRAULIC CIRCUIT

Standard Configurations With Side Inlet And Outlet Ports - LH

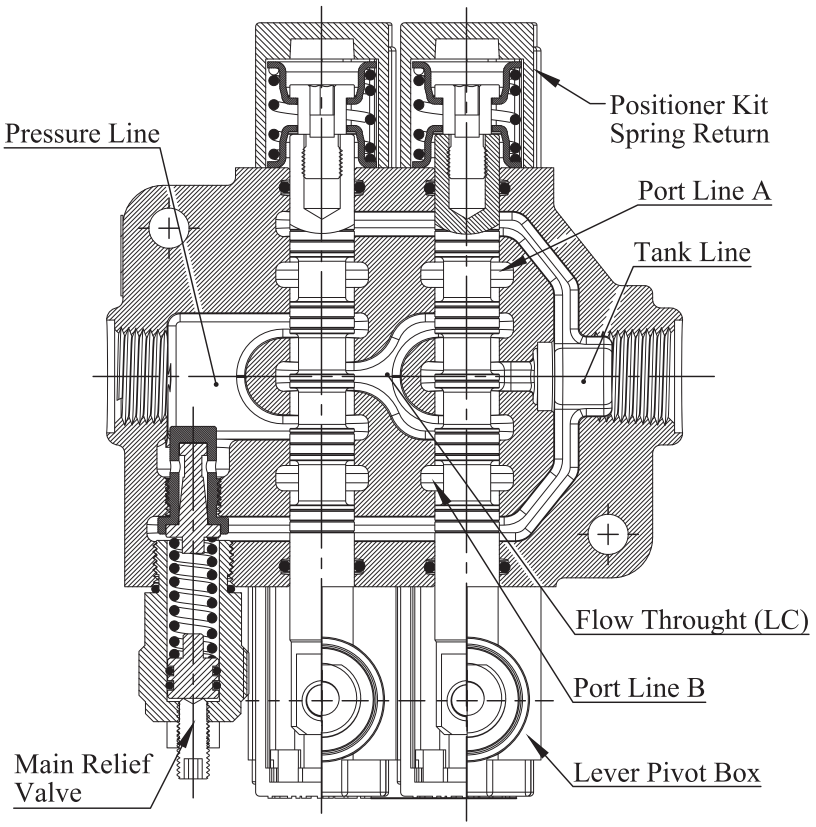

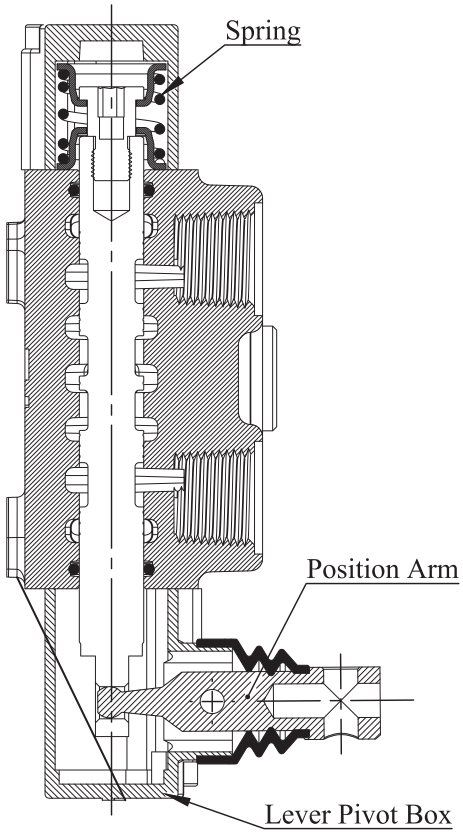

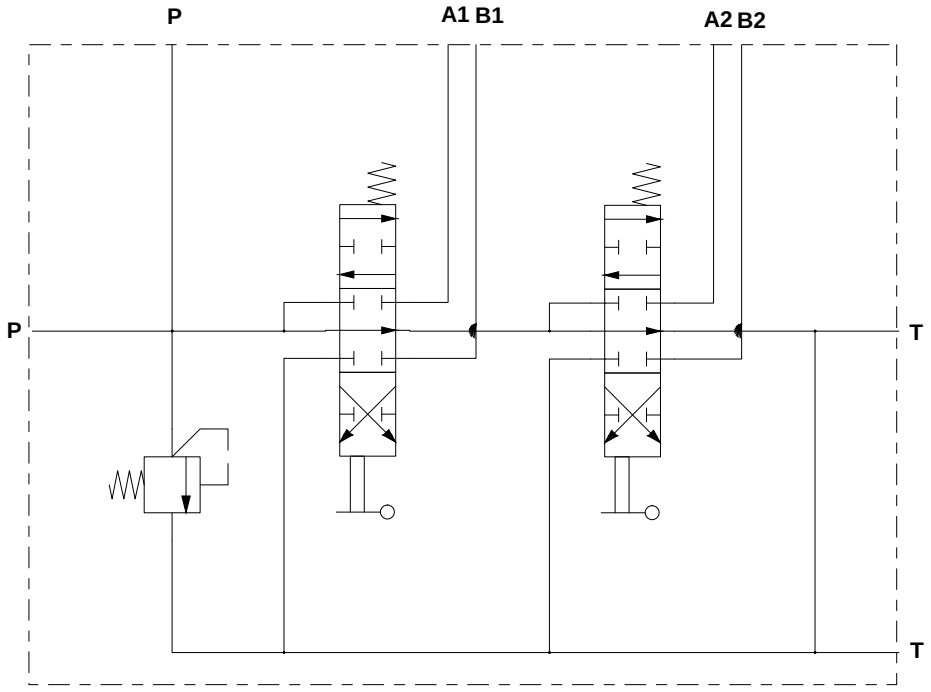

Code: ORV M45-2P / SMR2-120 / 1A-SR-STL/1A-SR-STL/PA1/SGT

Standard Configurations With Side Inlet And Outlet Ports - RH (Right Inlet)

A symetrical body allows the reverse assembly of spool and this with connected control kit (RH Configuration).

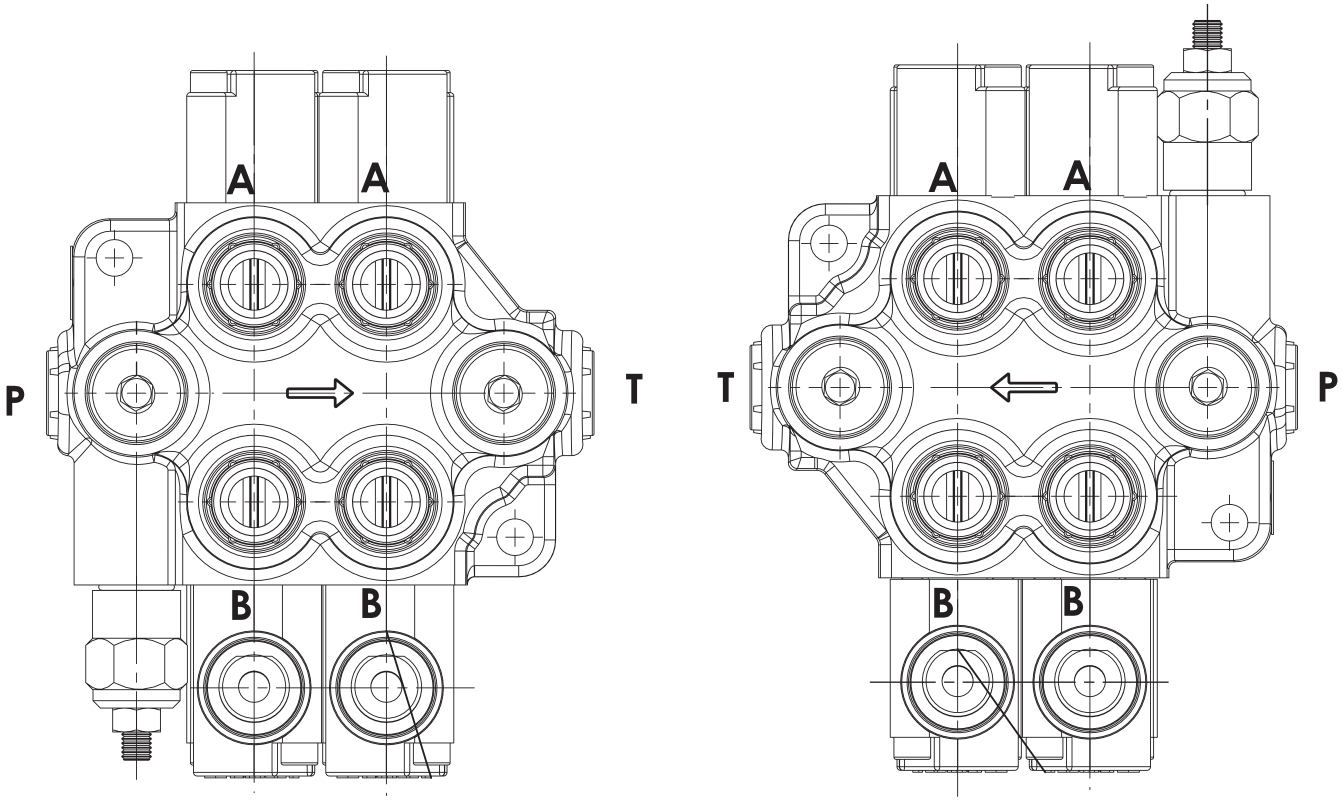

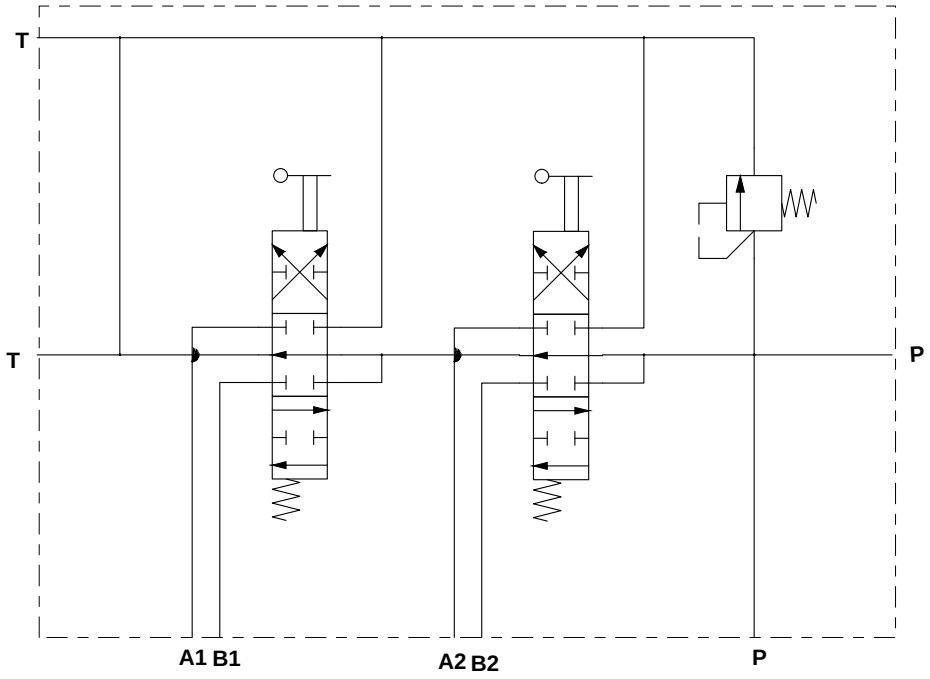

Code: ORV M45-2P / SMR2-120 / (RH) 1A-SR-STL/1A-SR-STL/PA1/SGT

PERFORMANCE DATA AND CURVE

Open Center - Pressure Drop (P-T)

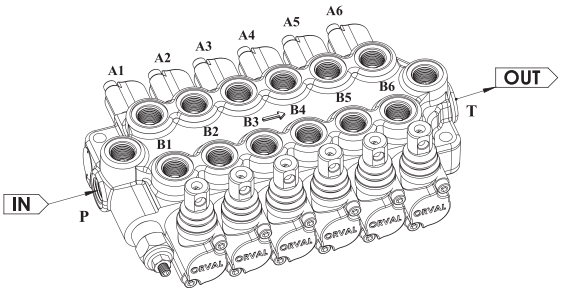

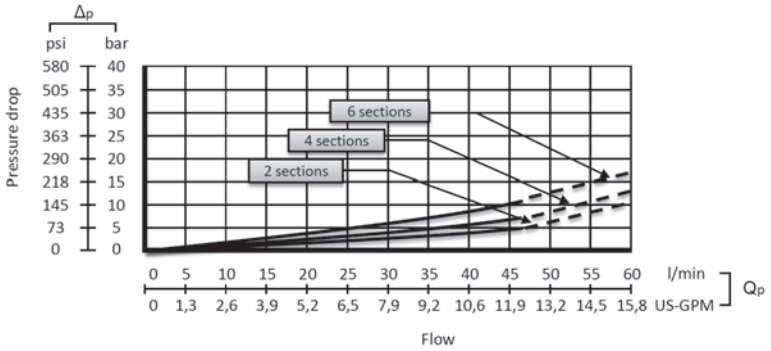

Inlet to Work Port - Pressure Drop (P-A/B)

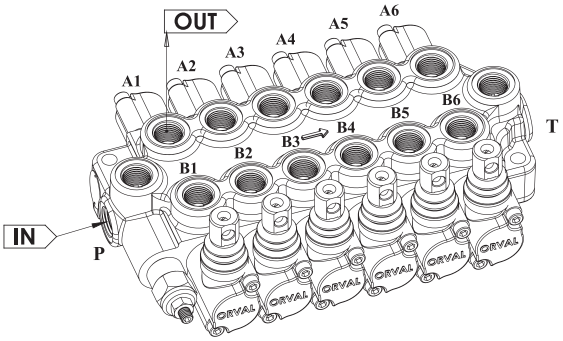

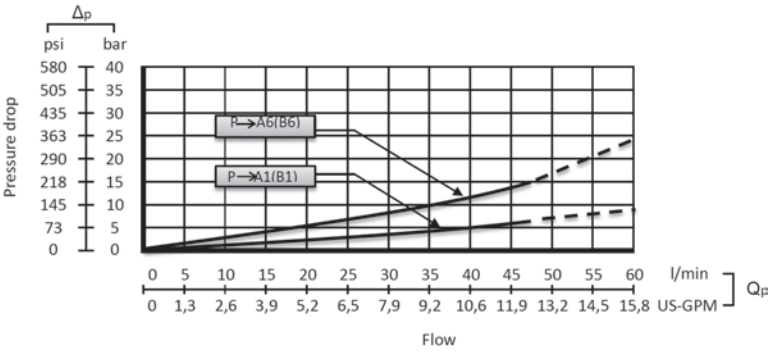

Work Port to Outlet - Pressure Drop (A/B-T)

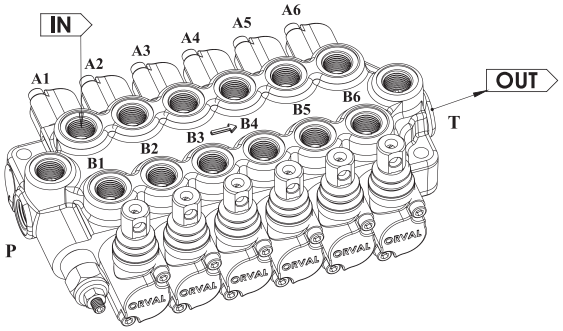

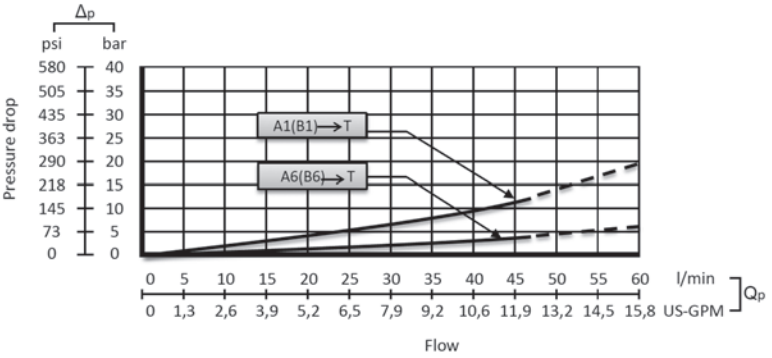

Note: Measured and chart value with spool type 1A.

INLET RELIEF OPTIONS

Direct Pressure Relief Valve

Code:

SMR2 – 120

- Pressure Setting Bar in (Standard 120 bar)
- Standard Main Relief Spring Type -2

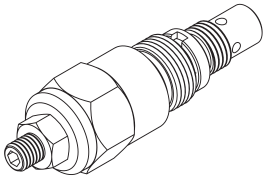

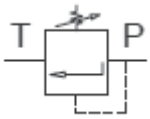

Performance Data

Spring Type Number: 3
Setting= 220 Bar -Range=160-315 Bar

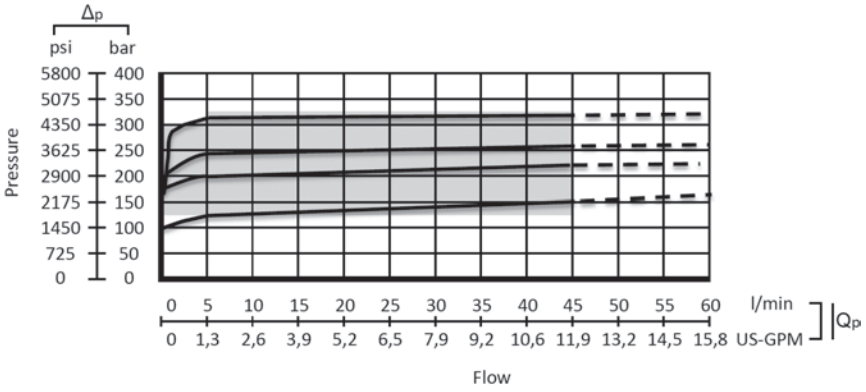

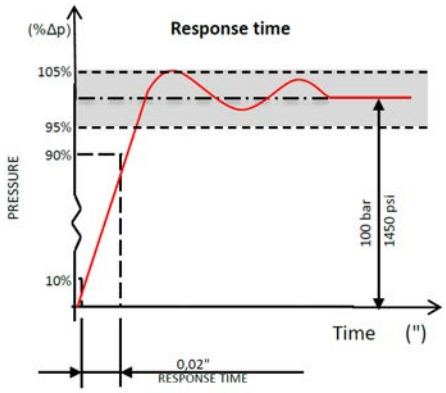

Adjustment Type on Valve

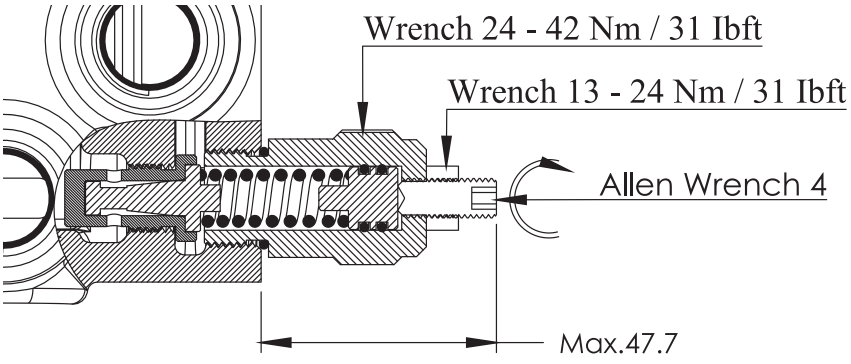

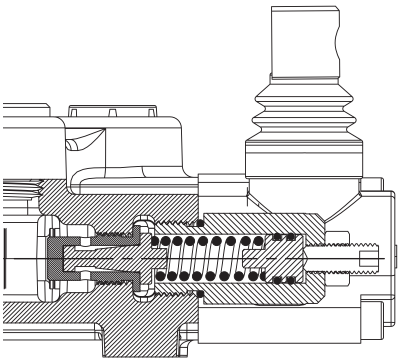

Relief Blanking Plug - WM

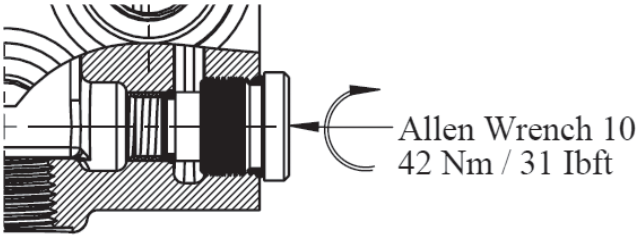

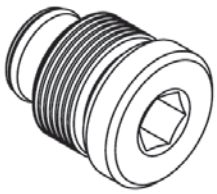

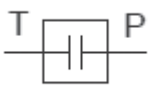

ORDERING CODES

Order Example

ORV M45-2P / SMR2-120 / 1A-SR-STL / 1A-45P-STL / CO - PL1 - P1 /SGT

1 | 2 | 3 4 5 (1 st Section) | Following Section | 6 7 8 9 (Output Section)

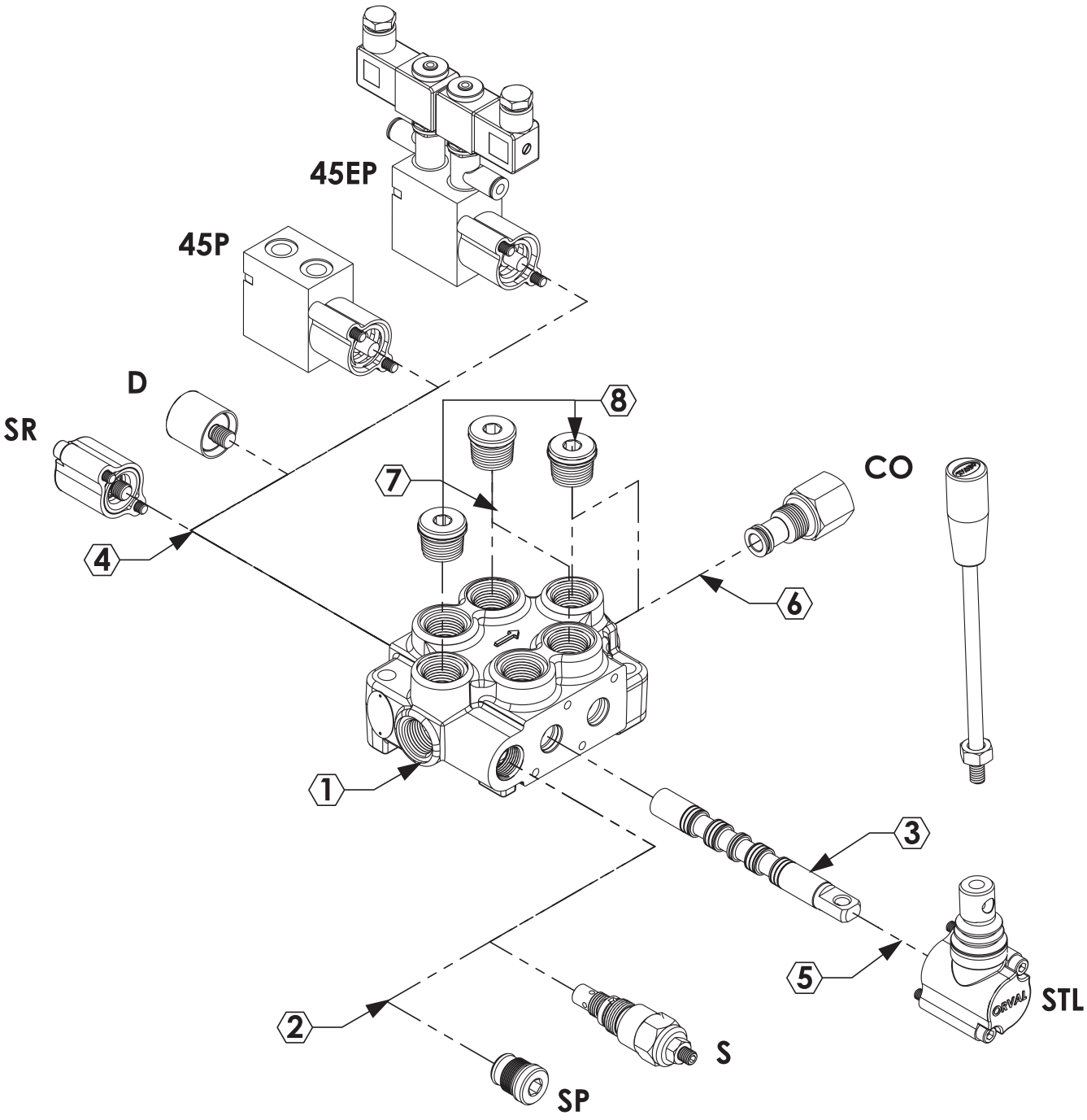

ORDERING CODES

1- Valve Type and Body

M45 = Valve Type - (M) - Monoblok
(45) - Max. Flow Rate
1P = Body for 1 Section - (1BM145100)
2P = Body for 2 Sections - (1BM245100)
3P = Body for 3 Sections - (1BM345100)
4P = Body for 4 Sections - (1BM445100)
5P = Body for 5 Sections - (1BM545100)
6P = Body for 6 Sections - (1BM645100)

2- Pressure Relief Options

SMR = Standard direct pressure relief valve
SMR1-080 – (2SMR145080)–Range 0-80 bar
Setting 80 bar
SMR2-120 – (2SMR245120)–Range 60-200 bar
Setting 120 bar
SMR3-220 – (2SMR345220)–Range 160-315 bar
Setting 220 bar
SP = Standard relief plug – (2SP045100)

3- Spool Options

1A -(3SM145110) – 3 Positions, Double acting
2A -(3SM145120) – 3 Positions, Double acting
A to tank B Blocked
3A -(3SM145130) – 3 Positions, Double acting
B to tank A blocked
4A -(3SM145140) – 3 Positions, Double acting
A and B tank
5A -(3SM145150) – 3 Positions, Single acting on
A (A to tank)
6A -(3SM145160) – 3 Positions, Single acting on
B (B to tank)

4- Spool Positioners

SR = Spring Return in neutral position –
(4SR045100)
D = Detent in position 1, neutral and 2 -
(4D045100)
45P = ON/OFF Pneumatic – (445P045100)
45EP = 12 /24 VDC ON/OFF electro-pneumatic –
(445EP045112)

5- Lever Options

STL = Standard Lever – (5STL045100)

6- Output Options

PA1(T) =G1/2" Top output plug- (6PL1040112)
PA1(S) =G1/2" Side output plug- (6PL1040112)
CO =G1/2" Carry–Over Connector – (6CO045100)

7- Ports Plug Options "If Required"

PL1(5A) =Plug for single action spool for 5A
G1/2 –(6PL1040112)
PL1(6A) =Plug for single action spool for 6A
G1/2 –(6PL1040112)
PL2(5A) =Plug for single action spool for 5A
G3/8- (7PL2045138)
PL2(6A) =Plug for single action spool for 6A
G3/8- (7PL2045138)
*Page 13 for detail spool options.

8- Ports Input Plug Options

PI1(T) = G1/2 Top input – (6PL1040112)
PI1(S) = G1/2 Side input – (6PL1040112)
PI2(T) = G3/8 Top input – (7PL2045138)
PI2(S) = G3/8 Side input – (7PL2045138)

9- Ports Thread Options

SGT1 = 1/2" Series Port Options - (9P045112)
SGT2 = 3/8" Series Port Options - (9P045138)
UNF = UNF Series Port Options - (9U045138)
M = Metric Series Port Options - (9M045138)
*Page 4 for detail port information.

HandLever

L = Standard HandLever (L=120mmxM8) - (7L040100)
HL = Remote Cable Kit – (80HL80100)

SPOOL OPTIONS

Spool Type - 1A

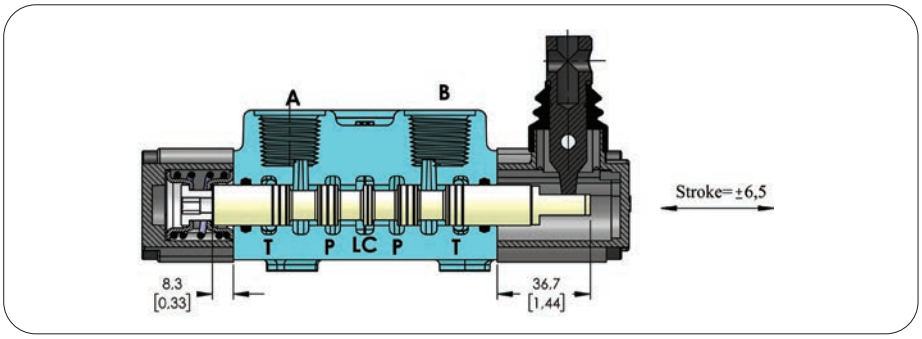

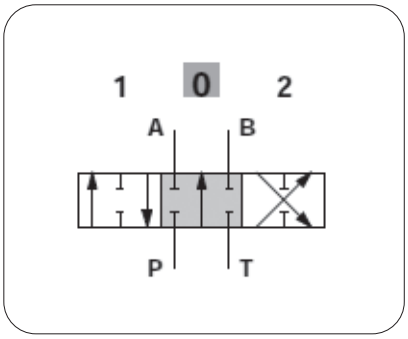

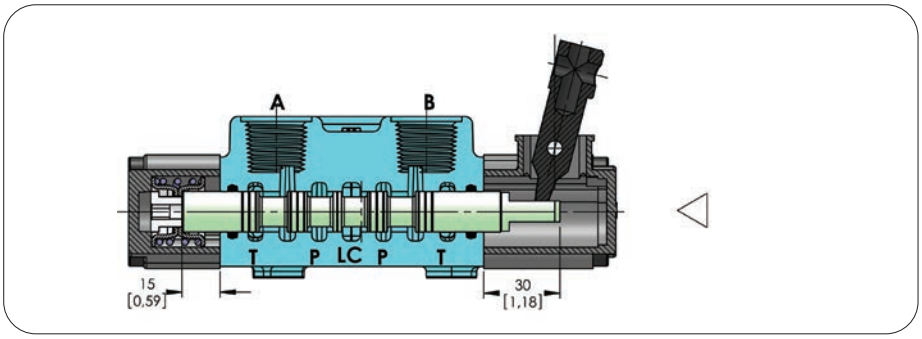

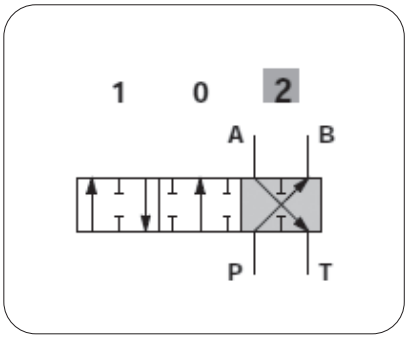

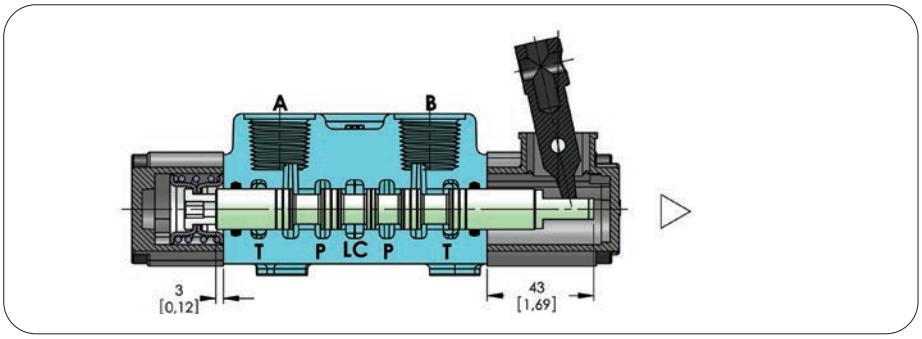

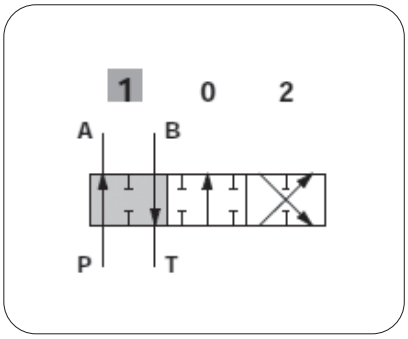

Performance Curve And Data

Spool metering P → A

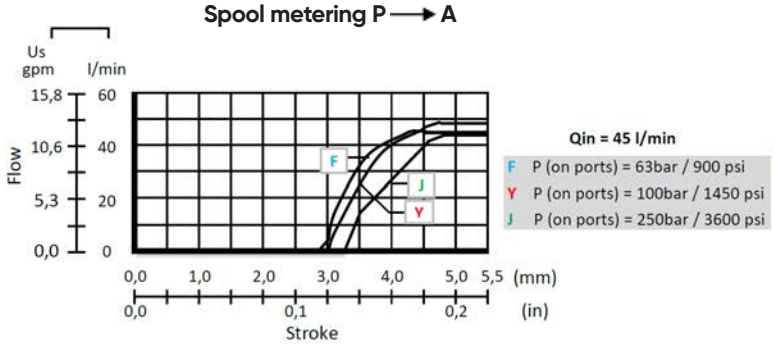

Qin = 45 l/min

F P (on ports) = 63bar / 900 psi
Y P (on ports) = 100bar / 1450 psi
J P (on ports) = 250bar / 3600 psi

Spool metering A → T

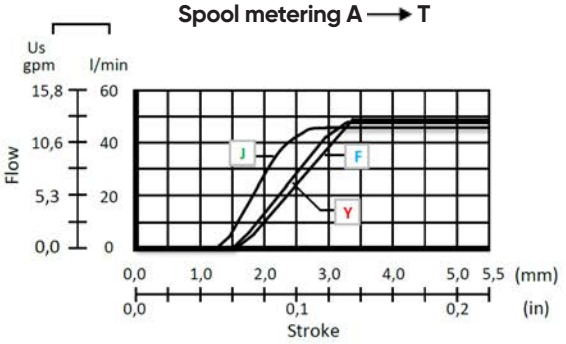

SPOOL OPTIONS

Spool Type - 2A

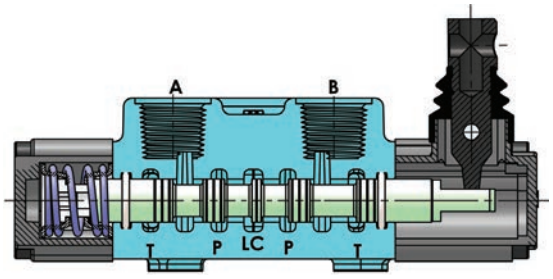

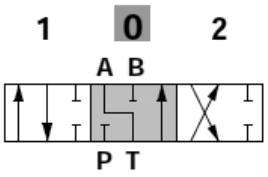

Spool Type - 3A

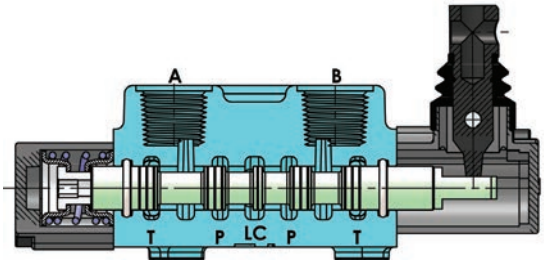

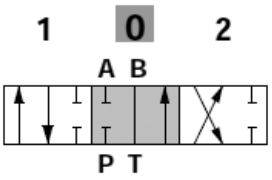

Spool Type - 4A

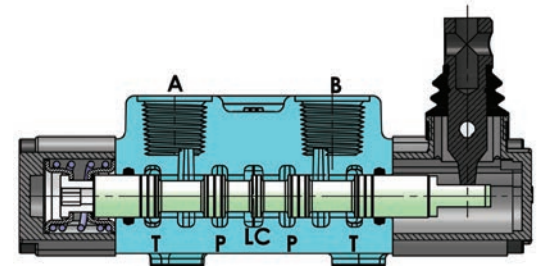

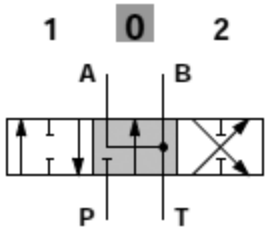

Spool Type - 5A

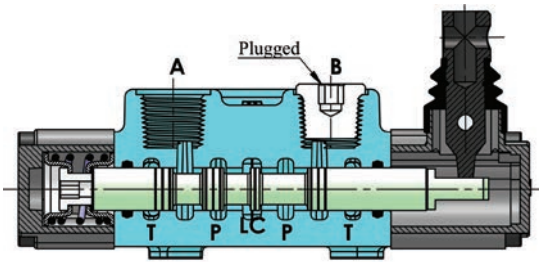

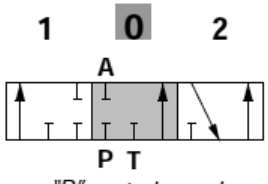

"B" port plugged

Spool Type - 6A

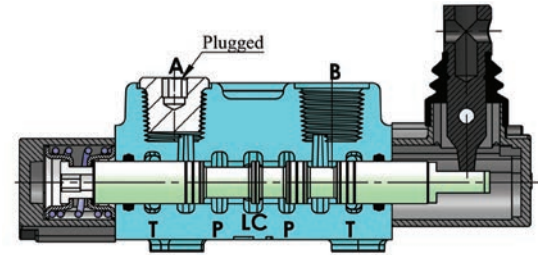

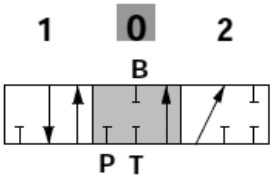

"A" port plugged

SPOOL POSITIONERS – SIDE OF RETURN

With Spring Return in Neutral Position

Kit No: **SR**

Sectional Appearance

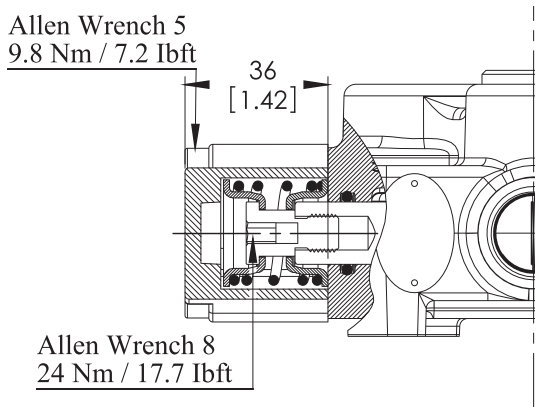

Diagram

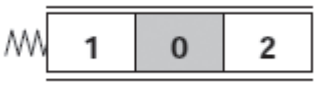

With Detent

Kit No: **D**

Sectional Appearance

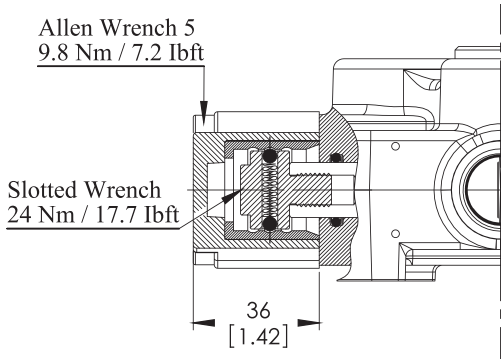

Diagram

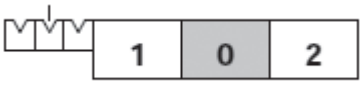

Force - stroke diagram

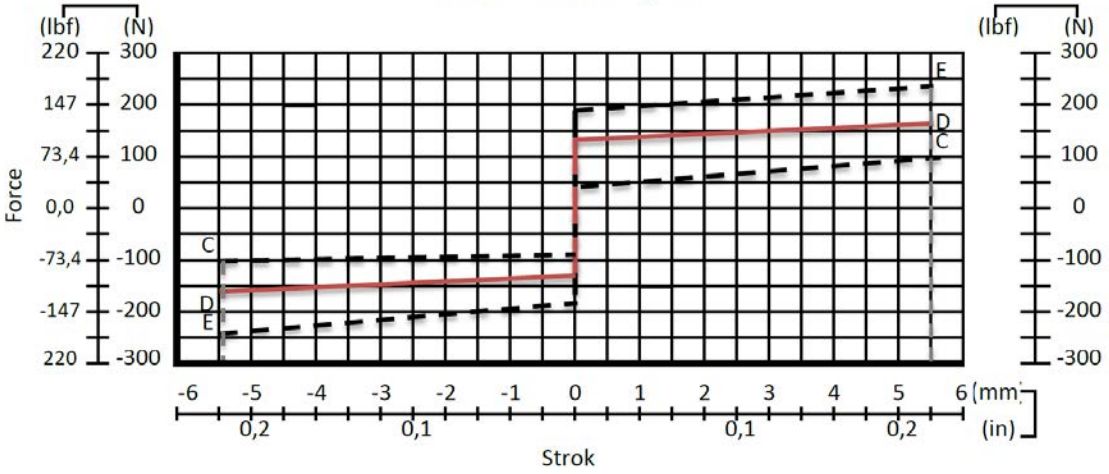

SPOOL POSITIONERS – SIDE OF RETURN

ON/OFF Pneumatic Control

Kit No: **45P**

Sectional Appearance

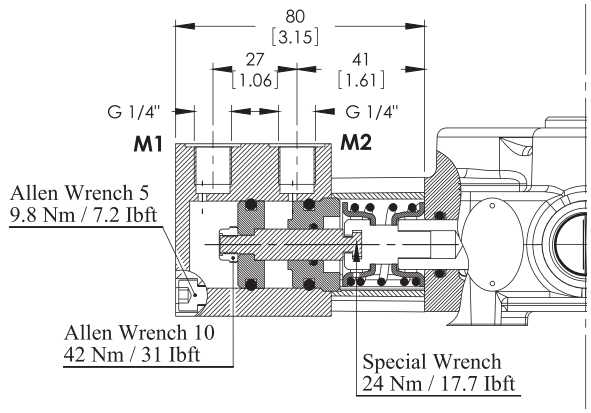

Diagram

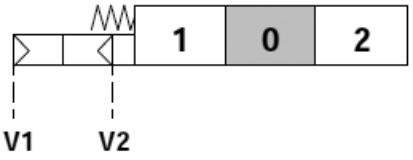

Operating Features

Pilot Pressure .....: 6 Bar (Max. 10) / 87 Psi (Max. 145)

ON/OFF Electro-Pneumatic Control

Kit No: **45EP**

Sectional Appearance

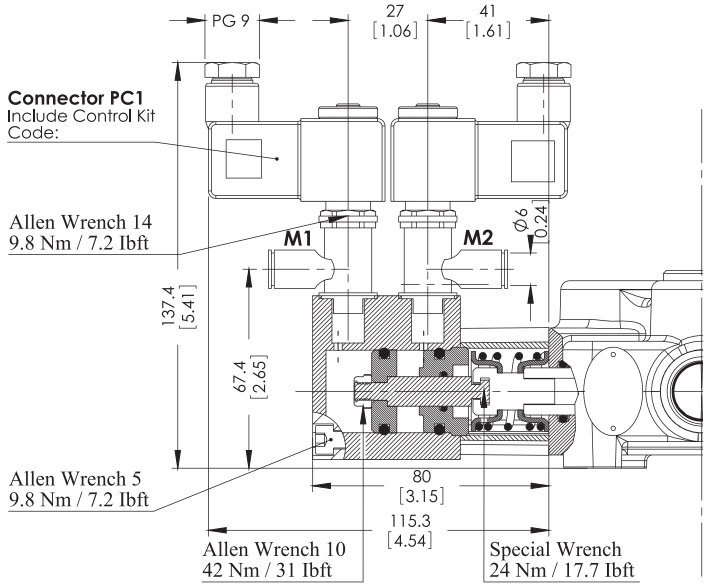

Diagram

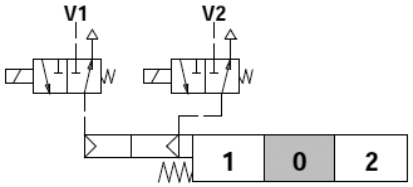

Operating Features

Pilot Pressure .....: 6 Bar (Max. 10) / 87 Psi (Max. 145)

Selenoid Operating Features

Nominal Voltage.....: 12VDC / 24 VDC

Power Rating.....: 6 W

SPOOL POSITIONERS – SIDE OF LEVER CONTROL

Lever Controls

Kit No: **STL - L0**

Sectional Appearance

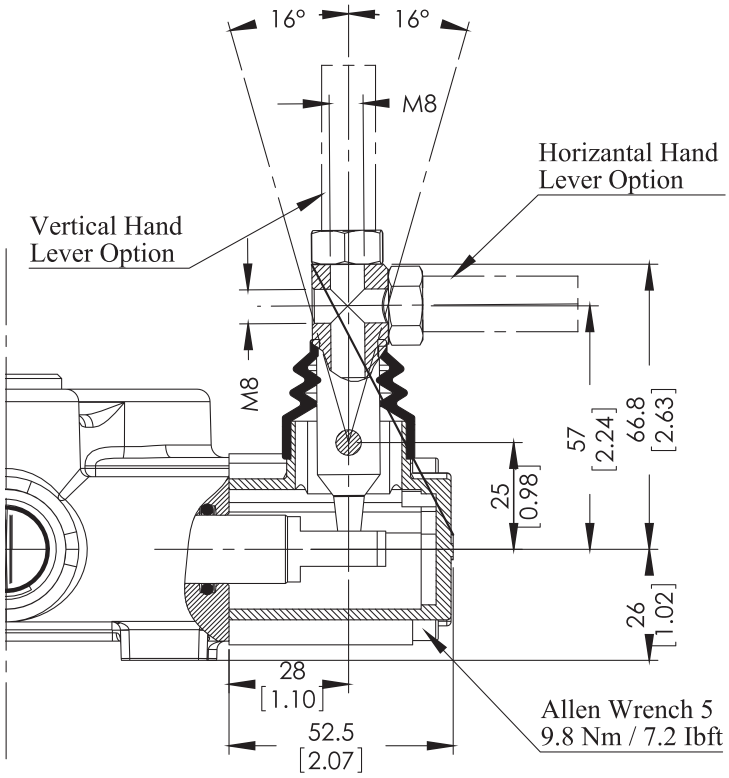

Diagram

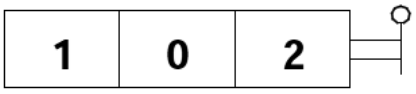

Kit No: **STL - L180**

Sectional Appearance

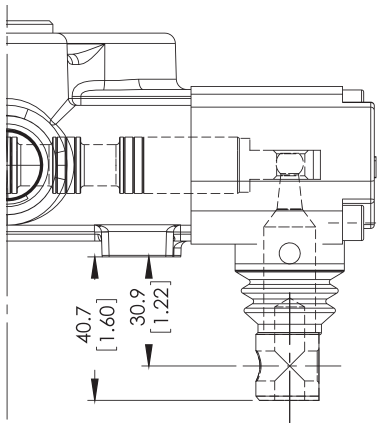

Diagram

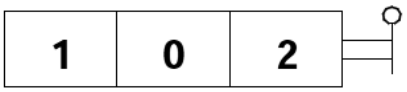

Note: Arm lever pivot box is aluminium cap protected. And it can be rotated 180º.

SPOOL POSITIONERS – SIDE OF LEVER CONTROL

Lever Controls - Cable Control

Kit No: **HL**

Sectional Appearance | Diagram

Waterproof cap prearranged for remote control with flexible cable.

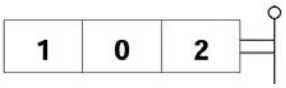

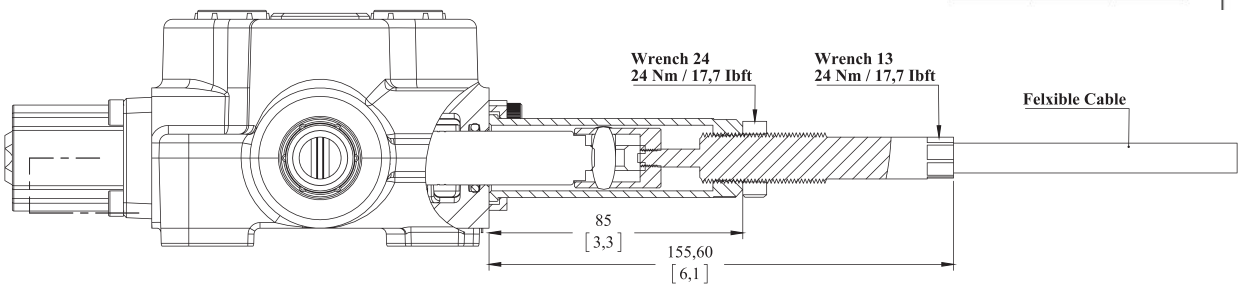

Note: Remote cable control has several options. Please indicte the cable length demanded and contact our sales department.

Example Operation

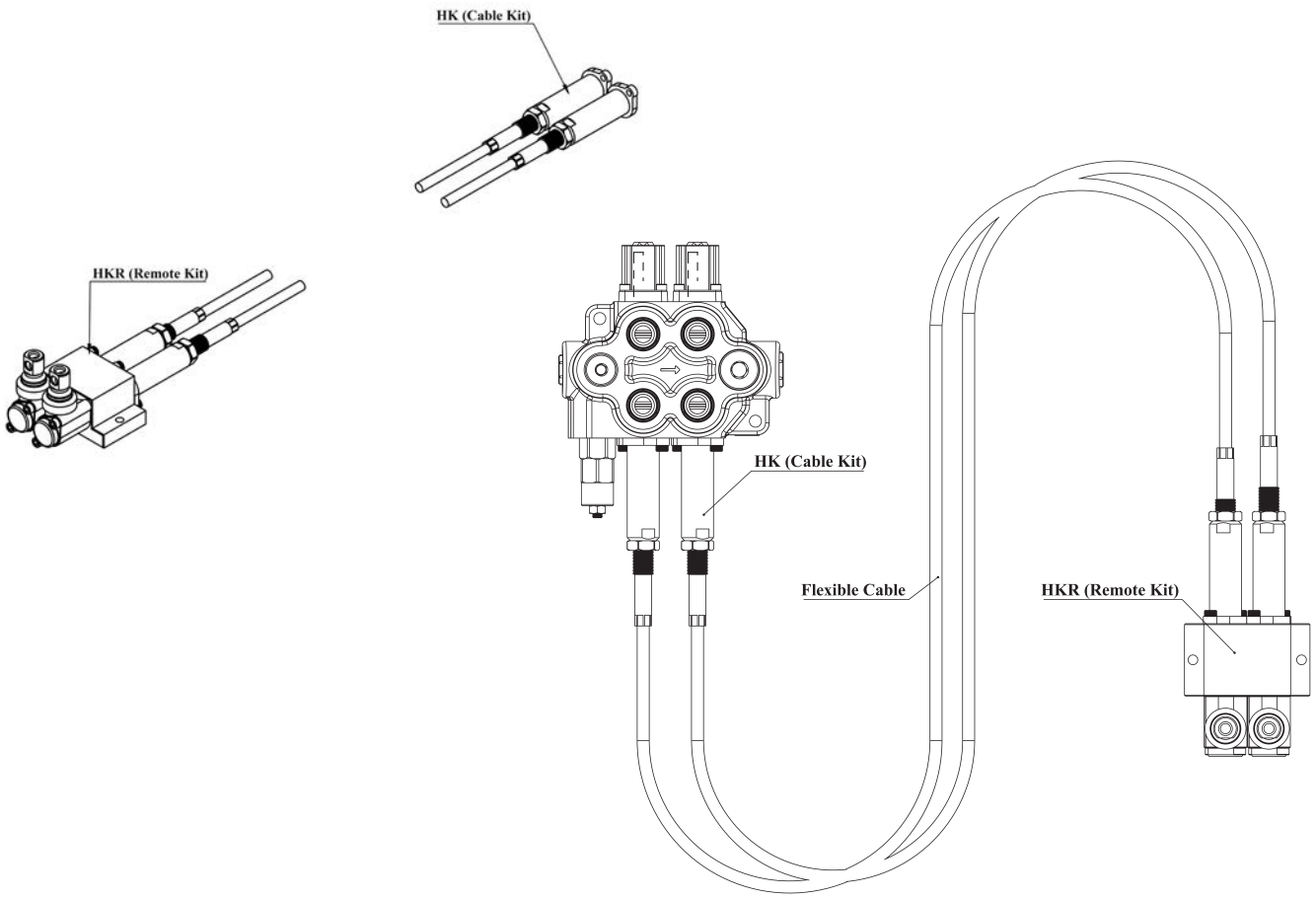

OUTLET PORT OPTIONS

Carry - Over Connection

Kit No: **CO**

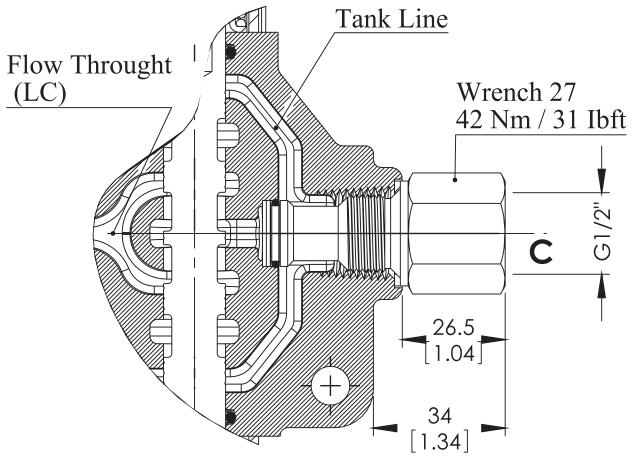

Sectional Appearance

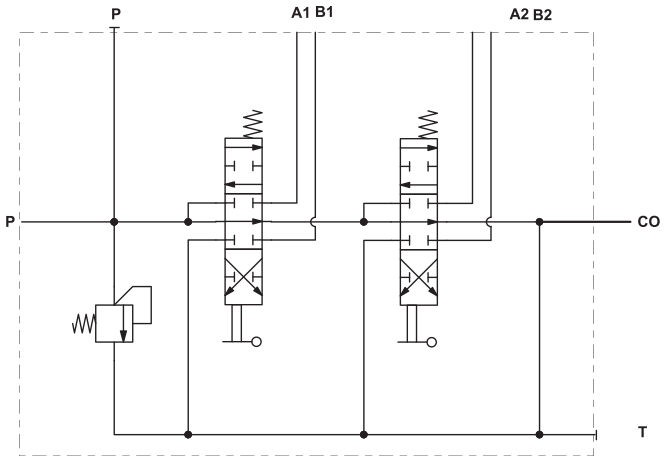

Hydraulic Circuit

Code: ORV M45-2P / SMR2-120 / 1A-SR-STL/ 1A-SR-STL/CO-PA1/SGT

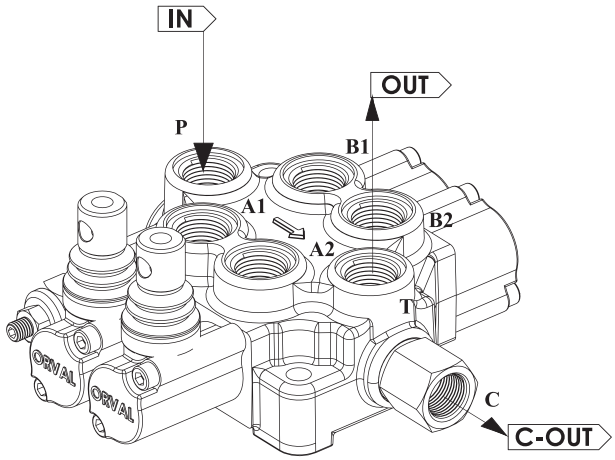

Direction of Port Connectted

SGT : See page 5 for Standard center.

INSTALLATION AND MAINTENANCE

The ORV M45 valve is assembled and tested as per the technical specification of this catalog. Before the final installation on your equipment, follow the below recommendation:

• The valve can be assembled in any position, in order to prevent body deformation and spool sticking, mount the product on a flat surface;

• In order to prevent the possibility of water entering to the lever box and spool control kit, do not use high pressure wash down directly on the valve;

• Before painting, ensure plastic port plugs are tightly in place.

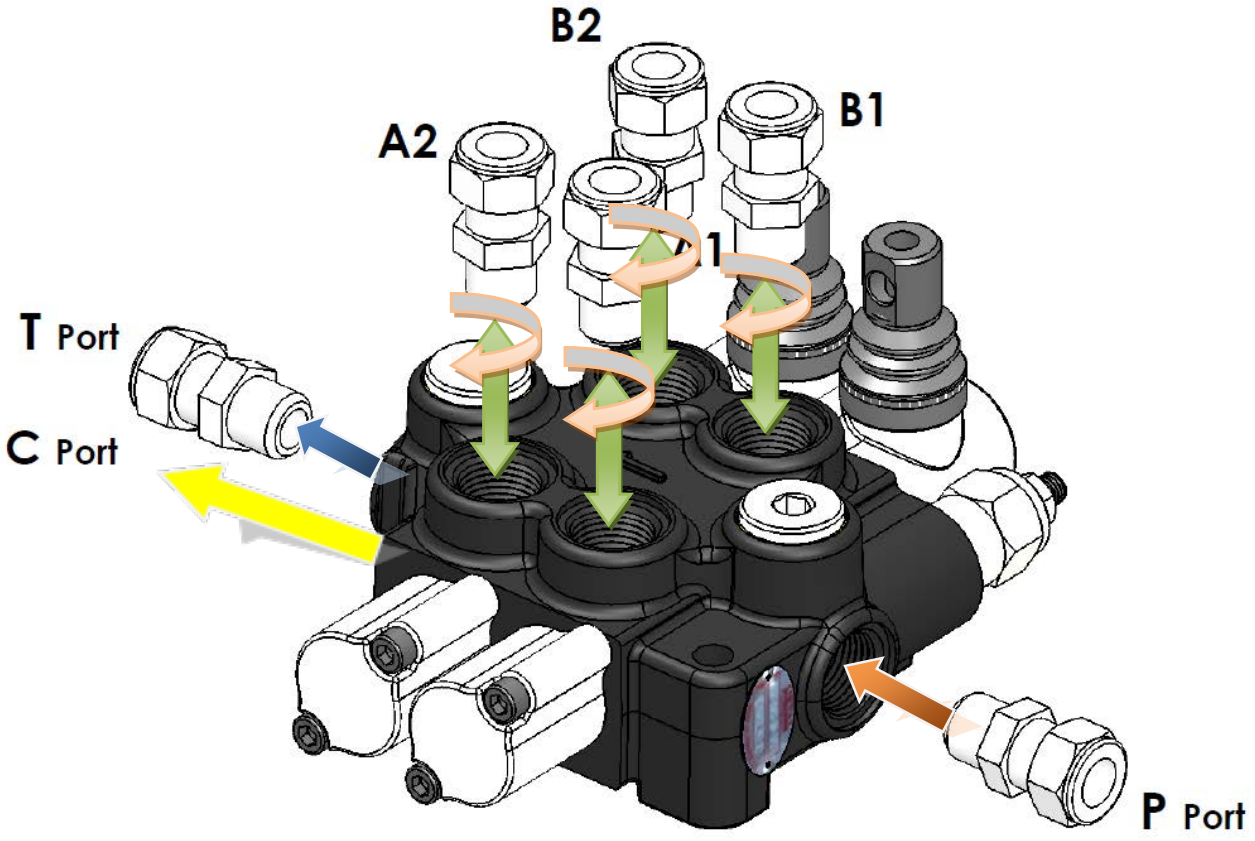

Threads Type (Nm / lbft)	P Port	A and B Port	T Port
BSP (ISO 228/1)	G 3/8	G 3/8	G 1/2
With O--Ring seal	35 / 25.8	35 / 25.8	50 / 36.9
With copper washer	40 / 29.5	40 / 29.5	60 / 44.3
With steel and rubber washer	30 / 22.1	30 / 22.1	60 / 44.3
BSP (ISO 228/1)	G 1/2	G 1/2	G 1/2
With O--Ring seal	50 / 36.9	50 / 36.9	50 / 36.9
With copper washer	60 / 44.3	60 / 44.3	60 / 44.3
With steel and rubber washer	60 / 44.3	60 / 44.3	60 / 44.3
UN--UNF (ISO 11926--1)	3/4--16 UNF--2B	9/16--18 UNF--2B	3/4--16 UNF--2B
With O--Ring seal	50 / 36.9	30 / 22.1	50 / 36.9
METRIC (ISO 262)	M18 x 1.5	M18 x 1.5	M18 x 1.5
With O--Ring seal	35 / 25.8	35 / 25.8	35 / 25.8
With copper washer	40 / 29.5	40 / 29.5	40 / 29.5
With steel and rubber washer	40 / 29.5	40 / 29.5	40 / 29.5

TECHNICAL DATA

Ports Dimensional Data

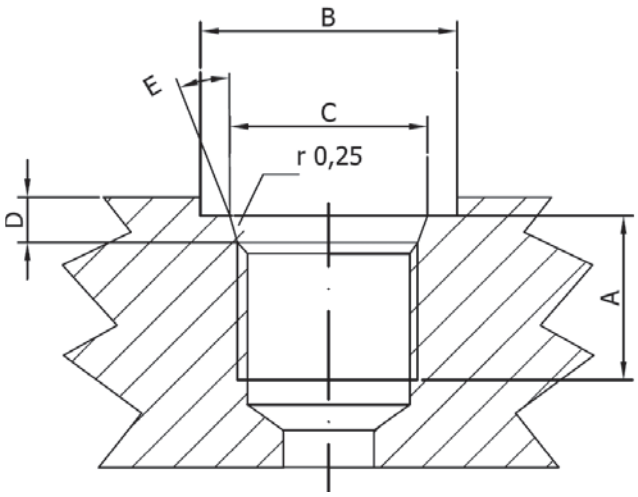

SAE UN-UNF (ISO 725)						
Dimensions		9/16-18 UNF SAE6		3/4-16 UNF SAE8		7/8-14 UNF SAE10
mm	in					
A		13	0,51	15	0,59	17	0,67
B		25	0,83	30	1,18	34	1,34
C		13,6	0,61	20,6	0,81	23,9	0,94
D		2,5	0,10	2,5	0,10	2,5	0,10
E		15°		15°		15°	

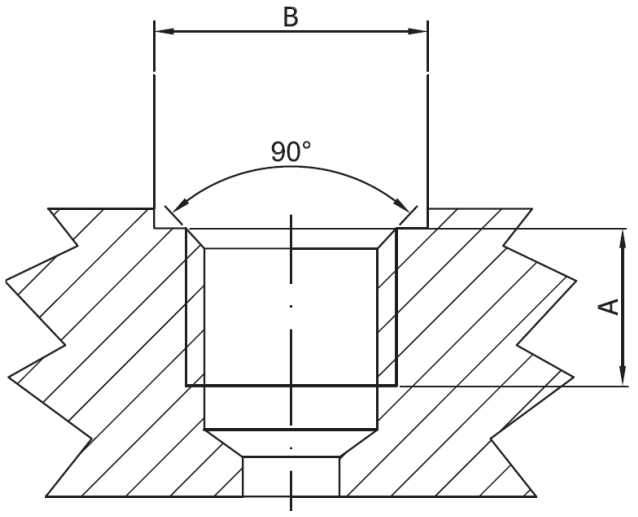

BSP (ISO 228)						
Dimensions		G1/4		G3/8		G1/2
mm	in					
A		14	0,55	14	0,55	16	0,63
B		19	0,75	23	0,91	27	1,06

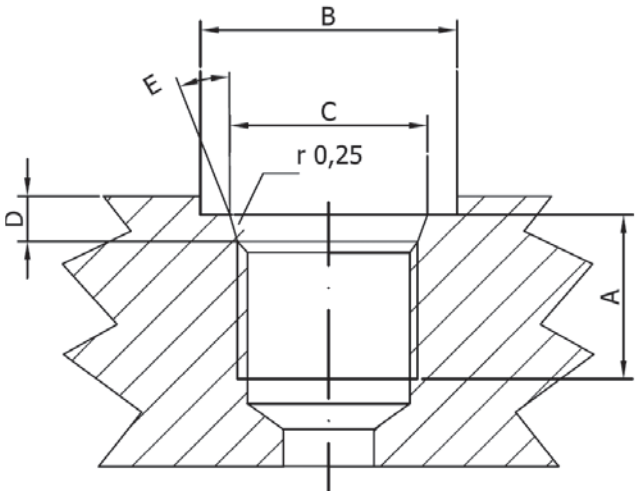

METRIC (ISO 262)					
Dimensions		M18x1,5 ISO 262		M22x1,5 ISO 262	
mm	in				
A		14	0,55	16	0,63
B		27,5	1,08	31,5	1,24

ORVAL HYDRAULIC

ORV M45



ORVAL HYDRAULIC

MONOBLOCK DIRECTIONAL CONTROL VALVES

ORV-MS45

CE

TÜV International Certification
TÜV THÜRINGEN CERT
AZAV
15 190 17185
TIC



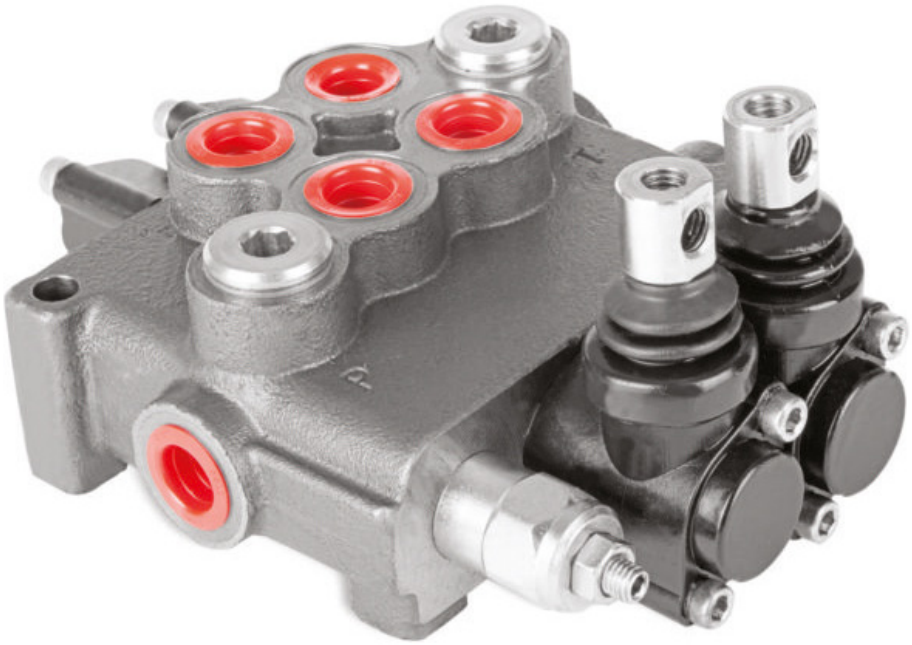

CONTENTS

Working Conditions	3
Dimensional Data	3
Hydraulic Circuit	3
Performance Data And Curve	3
Inlet Relief Options	3
Ordering Codes	3
Spool Options	3
Spool Positioners – Side of Return	3
Spool Positioners – Side of Lever Control	3
Spool Positioners – Side of Lever Control	3
Spool Positioners – Side of Lever Control	3
Spool Positioners – Side of Lever Control	3
Complete Control – On / Off Solenoid Control	3
Outlet Port Options	3
Outlet Port Options	3
Installation and Maintenance	3
Technical Data	3

Additional Informations

Note: This catalog shows the product in the most standard configurations. For Other Configurations, more detailed information or special request, Please contact Customer Service Dpt.

Warning!: All specifications of this catalog refer to the standard product at this date (01/2020). ORVAL, oriented to a continuous improvement, reserves the right to discontinue, modify or revise the specifications, without notice.

ORVAL IS NOT RESPONSIBLE FOR ANY DAMAGE CAUSED BY
AN INCORRECT USE OF THE PRODUCT.

WORKING CONDITIONS

Nominal Flow Rating / Displacement	45 l/min	12 U.S.G.P.M
Maximum Working Pressure (Parallel Circuit)	315 Bar	4600 PSI
(Series Circuit)	250 Bar	3600 PSI
Max. Back Pressure	25 Bar	360 PSI
Oil Temperature with NBR Seals	-20 to 80 C°	-4 to 176 F °
with FPM (Viton) Seals	-20 to 100 C°	-4 to 212 F °
Oil Viscosity – Operating Range	From 10 to 75 mm2/s	From 10 to 75 cSt
Minumum / Maximum	10 / 400 mm2/s	10 / 400 cSt
Oil Filtration	≤30 µ	
Ambiant Temperature Range	-35 to 60 C°	-31 to 140 F °
Number Of Spools	1 to 7	
Internal Leakage (at 100 bar (1450 PSI), 40C° (110 F°), 46 cSt – A(B)–T)	3 cm3/min	0,18 in3/min
Max. Level Of Contamination	19/16 - ISO 4406	

Not: This catalogue shows technical specifications measured with mineral oil of 46 mm2/s-46 cSt viscosity at 40 C° temparture.

Features

• Simple, compact and heavy duty designed monoblock valves from 1 to 7 sections for open and closed center hydraulic systems.
• Fitted with a main pressure relief valve and a load check valve.
• Optionaly Carry-Over port only parallel circuit.
• Interchangeable spool diameter is 16 mm – 0,63 in.
• Available manual, pneumatic, hydraulic and electro-pneumatic spool control kits.

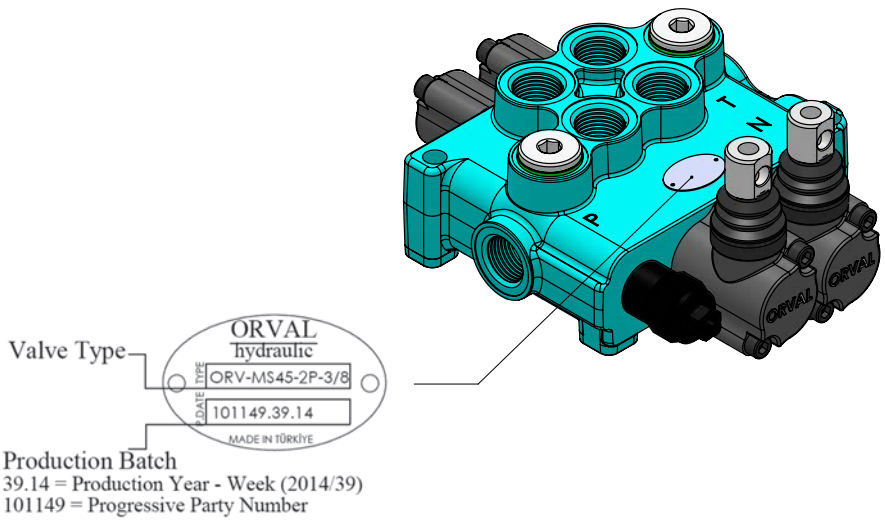

DIMENSIONAL DATA

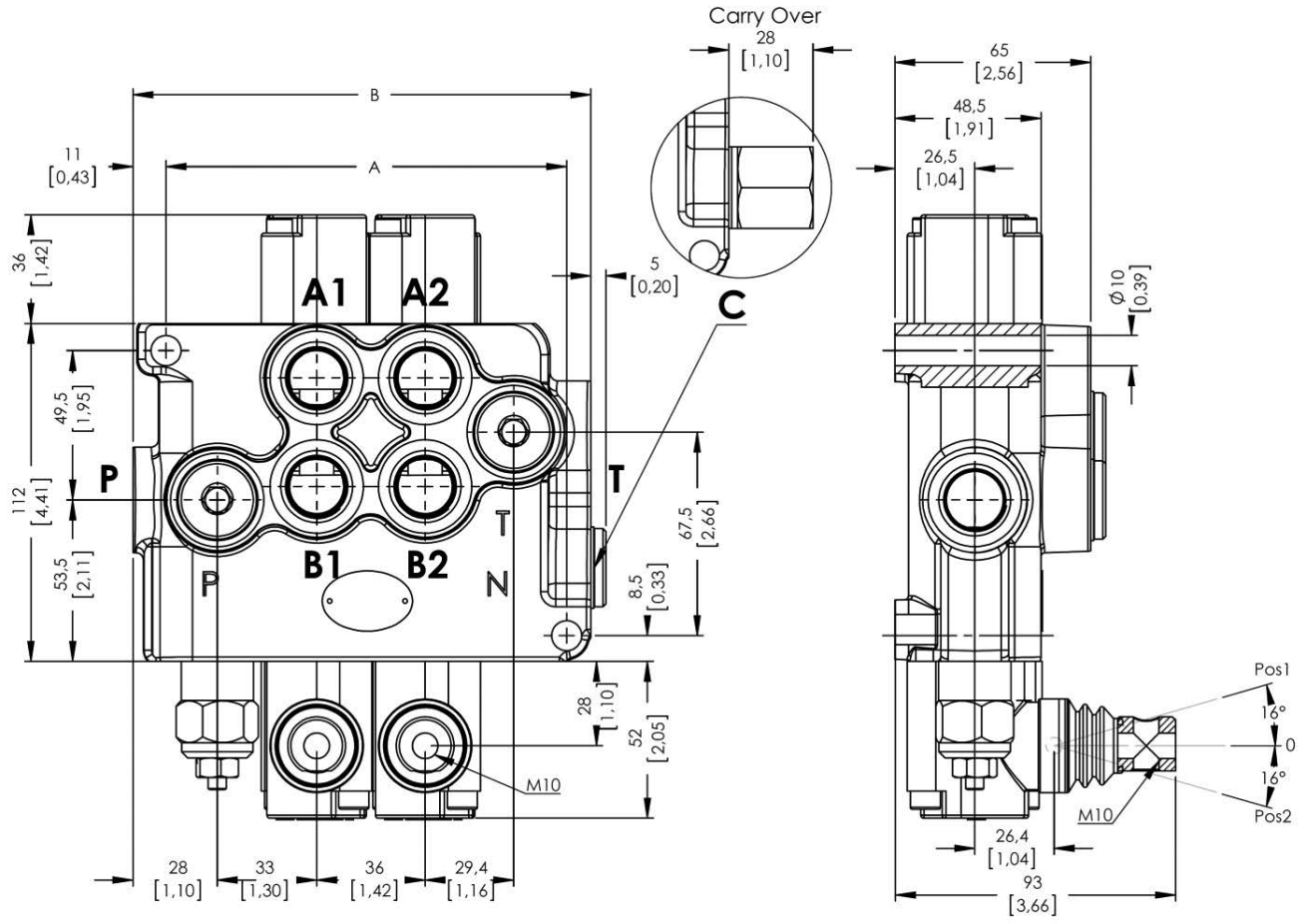

TYPE	A		B		Weight	
	mm	in	mm	in	Kg	lb
ORV-MS45-1P	97	4,25	116	4,56	4,00	8,18
ORV-MS45-2P	133	5,23	152	5,98	6,00	13,23
ORV-MS45-3P	169	6,65	188	7,40	7,40	16,31
ORV-MS45-4P	205	8,07	224	8,82	9,00	19,84
ORV-MS45-5P	241	9,49	260	10,23	10,60	23,37
ORV-MS45-6P	277	10,90	296	11,65	12,30	27,12
ORV-MS45-7P	313	12,32	332	13,07	14,00	30,86

STANDARD THREADS

PORT	BSP (Iso 228) 3/8" Series	BSP (Iso 228) ½"Series	UN-UNF (Iso 11926-1)	Metric (Iso 262)
P Inlet	G 3/8	G 1/2	3/4-16 UNF	M18x1.5
A-B Ports	G 3/8	G 1/2	9/16-18 UNF	M18x1.5
T Outlet	G 1/2	G 1/2	3/4-16 UNF	M18x1.5
Pneumatic	G 1/4	G 1/4	NPTF 1/8 - 27	NPTF 1/8 - 27
Carry-Over	G 1/2	G 1/2	3/4-16 UNF	G 1/2

HYDRAULIC CIRCUIT

Parallel - Standard Configurations With Side Inlet And Outlet Open Center

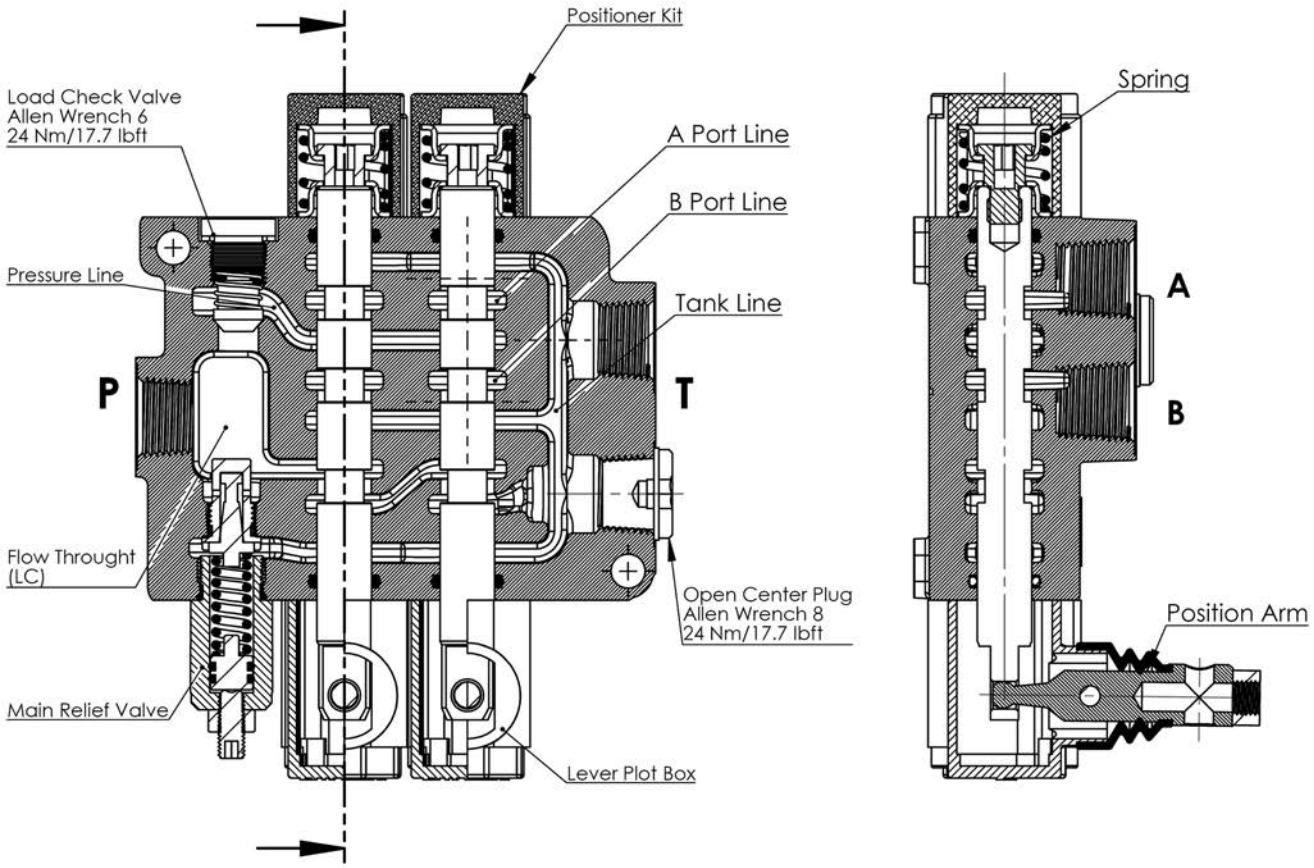

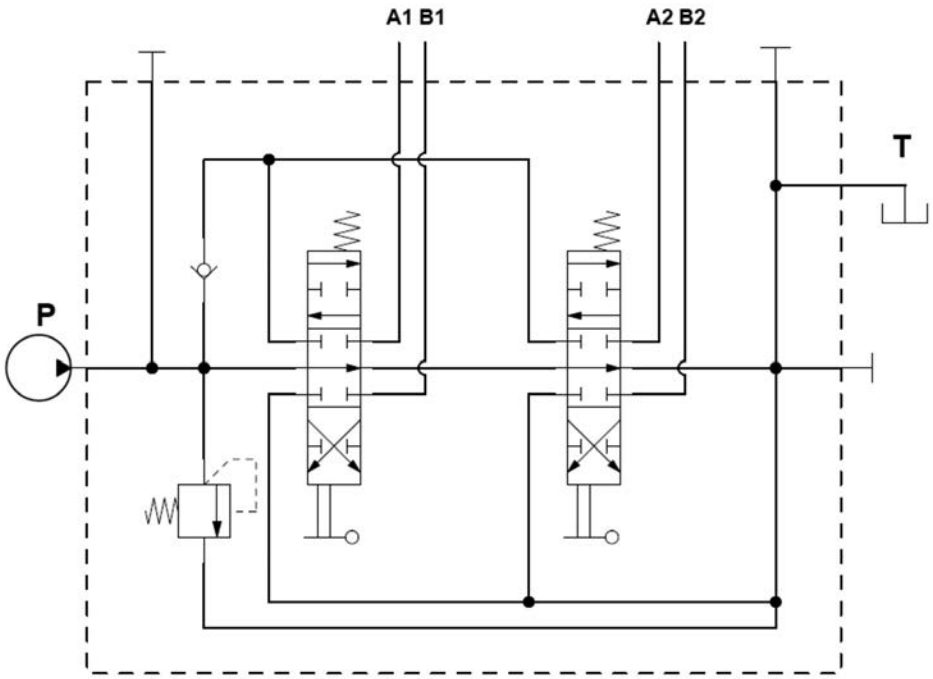

Code: ORV MS45-2P / SMR2-120 / 1A-SR-STL/1A-SR-STL/PA1/SGT

PERFORMANCE DATA AND CURVE

Open Center - Pressure Drop (P-T)

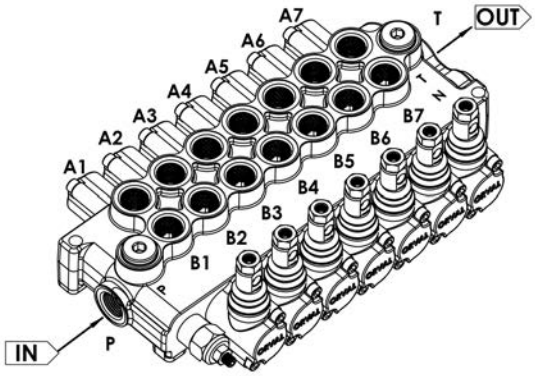

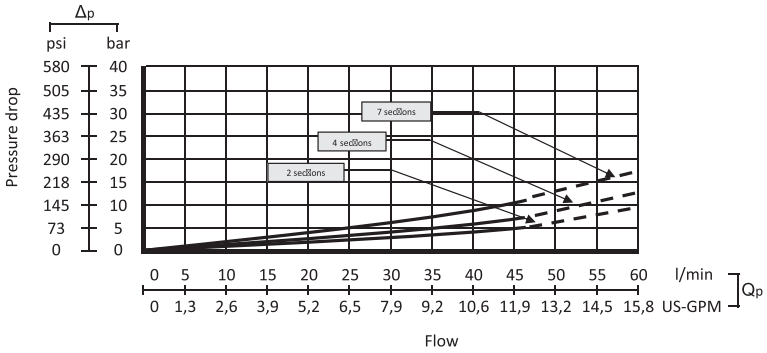

Inlet to Work Port - Pressure Drop (P-A/B)

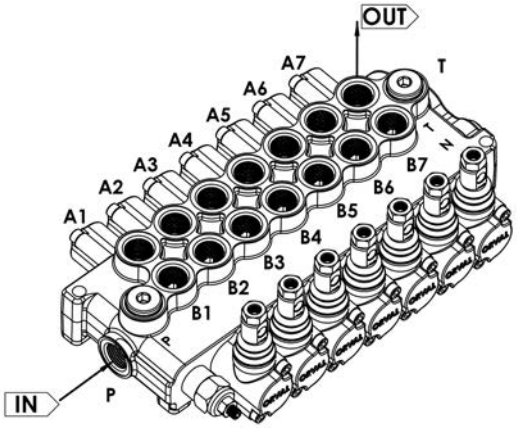

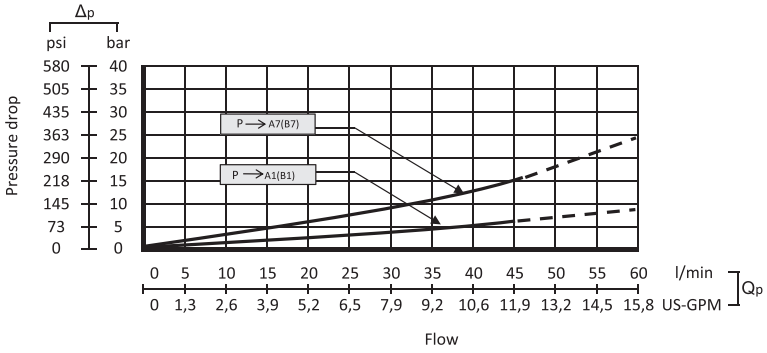

Work Port to Outlet - Pressure Drop (A/B-T)

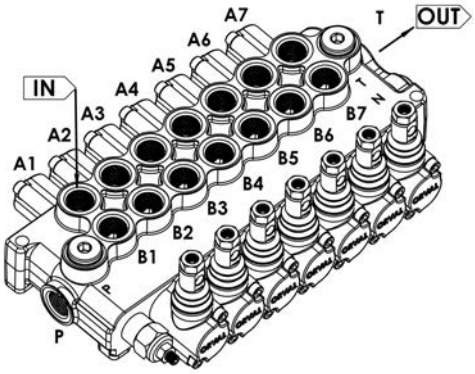

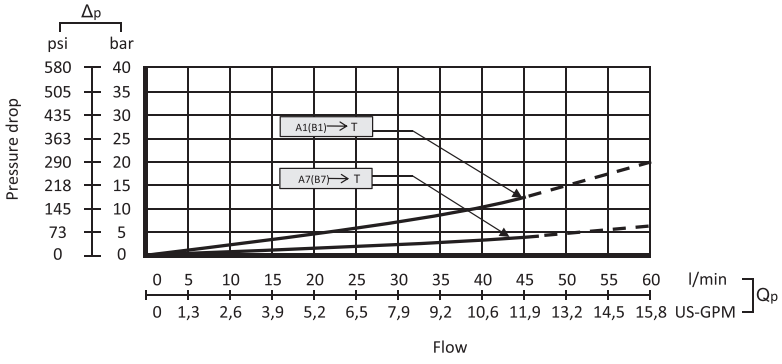

Note: Measured and chart value with spool type 1A.

INLET RELIEF OPTIONS

Direct Pressure Relief Valve

Code:

SMR2 – 120

- **Pressure Setting Bar in (Standard 120 bar)**
- **Standard Main Relief Spring Type -2**

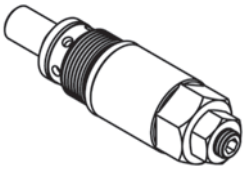

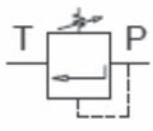

Performance Data

Spring Type Number: 1
Setting= 80 Bar -Range=63-125 Bar

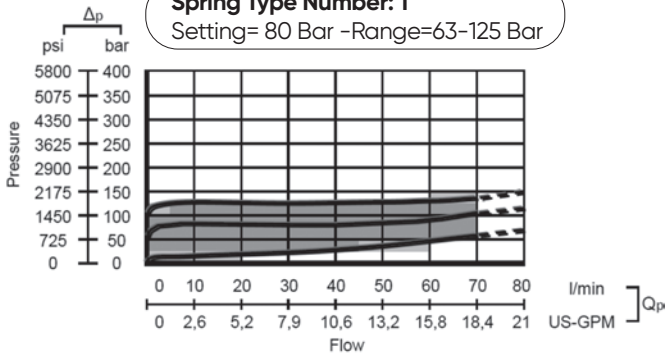

Spring Type Number: 3
Setting= 220 Bar -Range=200-315 Bar

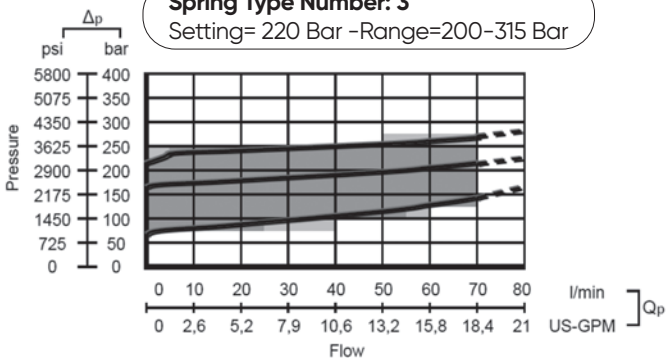

Spring Type Number: 2
Setting= 120 Bar -Range=100-165 Bar

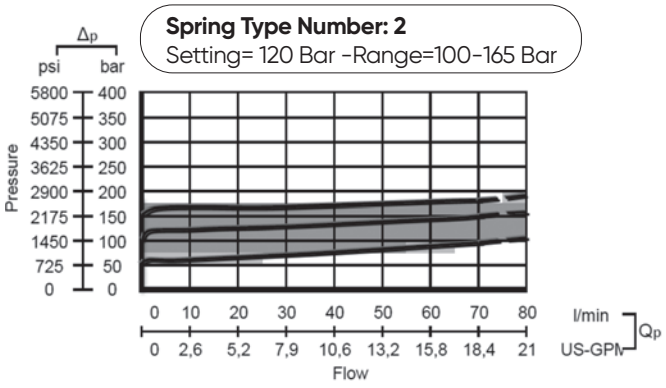

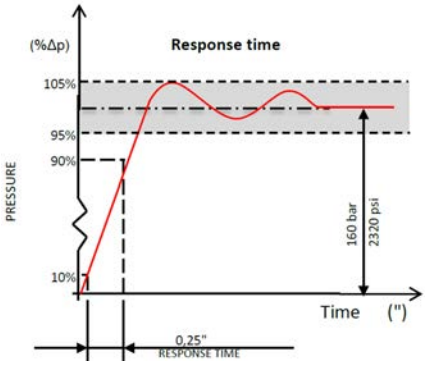

Adjustment Type on Valve

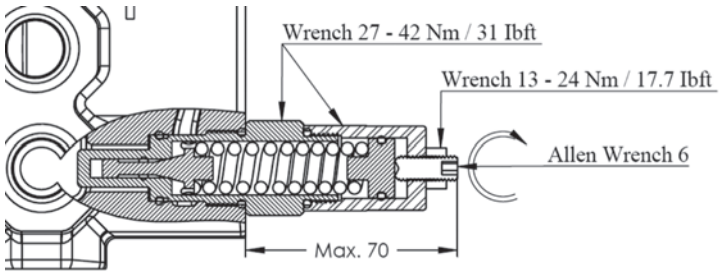

Relief Blanking Plug - WM

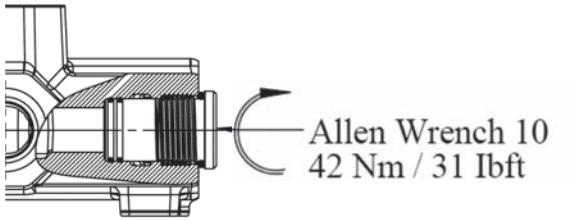

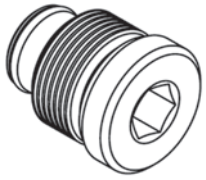



ORDERING CODES

Order Example

ORV MS45-2P	/	SMR2-120	/	1A-SR-STL	/	1A-45P-STL	/	CO - PL1 - P1	/	SGT
1		2		3 4 5				6 7 8 9		
				1 st Section		Following Section		Output Section		

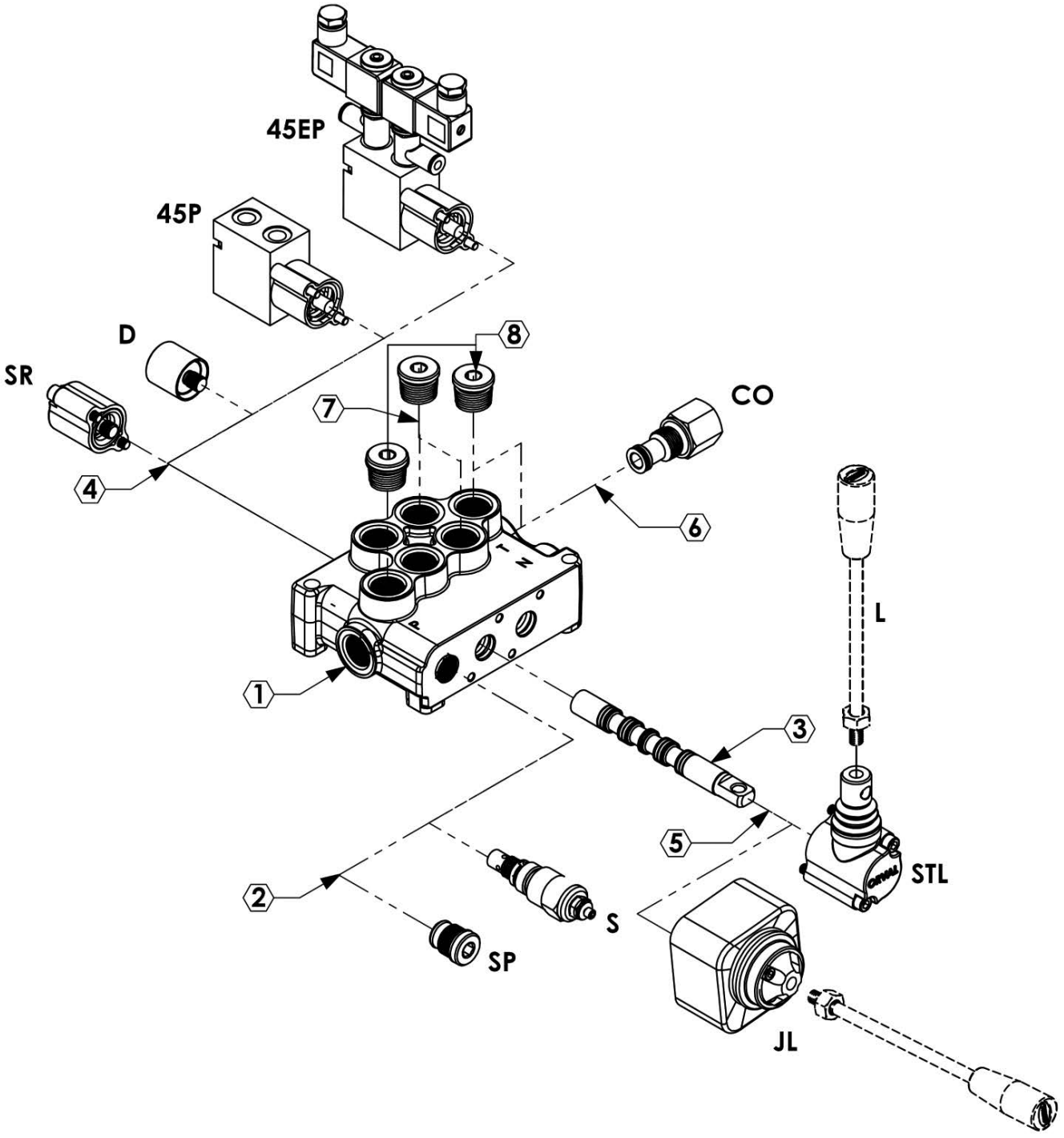

ORDERING CODES

1- Valve Type and Body

MS45 =Valve Type - (MS) - Monoblok
(45) - Max. Flow Rate

1P = Body for 1 Section - (1BMS145100)
2P = Body for 2 Sections - (1BMS245100)
3P = Body for 3 Sections - (1BMS345100)
4P = Body for 4 Sections - (1BMS445100)
5P = Body for 5 Sections - (1BMS545100)
6P = Body for 6 Sections - (1BMS645100)

2- Pressure Relief Options

SMR = Standard direct pressure relief valve
SMR1-080 – (2SMR145080)– Range 0-80 bar
Setting 80 bar
SMR2-120 – (2SMR245120)– Range 60-200 bar
Setting 120 bar
SMR3-220 – (2SMR345220)–Range 160-315 bar
Setting 220 bar
SP =Standard relief plug – (2SP045100)

3- Spool Options

1A - (3SMS145110) – 3 Positions, Double acting
2A -(3SMS145120) – 3 Positions, Double acting
A to tank B Blocked
3A -(3SMS145130) – 3 Positions, Double acting
B to tank A blocked
4A -(3SMS145140) – 3 Positions, Double acting
A and B tank
5A -(3SMS145150) – 3 Positions, Single acting on
A (A to tank)
6A -(3SMS145160) – 3 Positions, Single acting on
B (B to tank)

4- Spool Positioners

SR = Spring Return in neutral position – (4SR045100)
D = Detent in position 1, neutral and 2 - (4D045100)
45P = ON/OFF Pneumatic – (445P045100)
45EP = 12 /24 VDC ON/OFF electro-pneumatic –
(445EP045112)
45EH = 12 VDC/24 VDC ON/OFF electro-hydraulic
(3645EH100112)

5- Lever Options

STL = Standard lever –(5STL045100)
JL = Joystick lever for two sections operation
- (5JL 080100)

6- Output Options

PA1(T) = G1/2" Top output plug- (6PL1040112)
PA1(S) = G1/2" Side output plug- (6PL1040112)
CO = G1/2" Carry–Over Connector – (6CO045100)

7- Ports Plug Options "If Required"

PL1(5A) = Plug for single action spool for 5A
G1/2 –(6PL1040112)
PL1(6A) = Plug for single action spool for 6A
G1/2 –(6PL1040112)
PL2(5A) = Plug for single action spool for 5A
G3/8- (7PL2045138)
PL2(6A) = Plug for single action spool for 6A
G3/8- (7PL2045138)

*Page 13 for detail spool options.

8- Ports Input Plug Options

PI1(T) = G1/2 Top input – (6PL1040112)
PI1(S) = G1/2 Side input – (6PL1040112)
PI2(T) = G3/8 Top input – (7PL2045138)
PI2(S) = G3/8 Side input – (7PL2045138)

9- Ports Thread Options

SGT1 = 1/2" Series Port Options - (9P045112)
SGT2 = 3/8" Series Port Options - (9P045138)
UNF = UNF Series Port Options - (9U045138)
M = Metric Series Port Options - (9M045138)

*Page 4 for detail port information.

HandLever

L = Standard HandLever (L=120mmxM10) - (7L040100)
HL = Remote Cable Kit – (80HL80100)

SPOOL OPTIONS

Spool Type - 1A

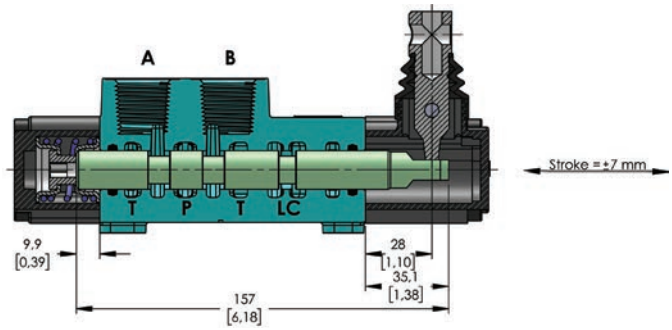

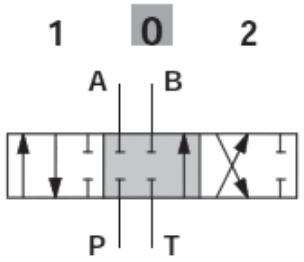

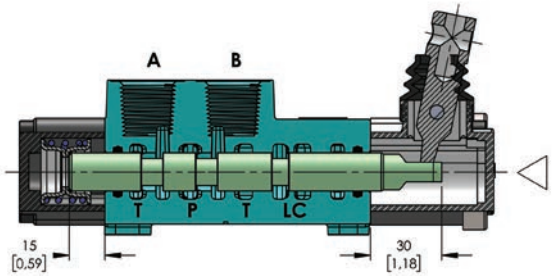

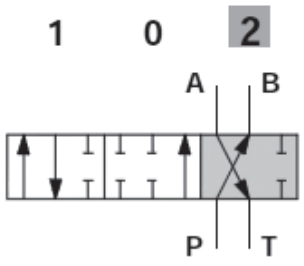

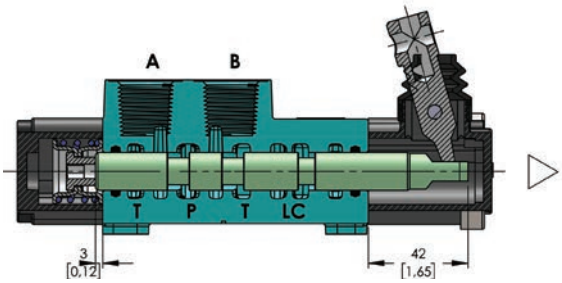

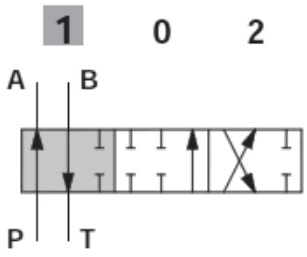

Performance Curve And Data

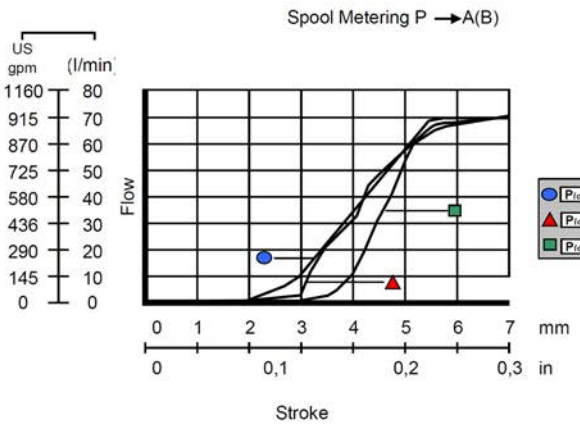

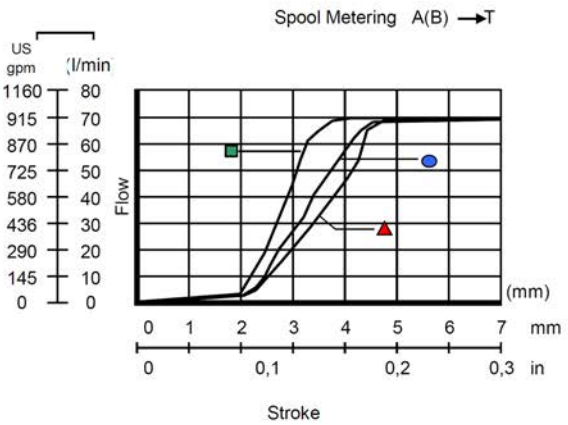

SPOOL OPTIONS

Spool Type - 2A

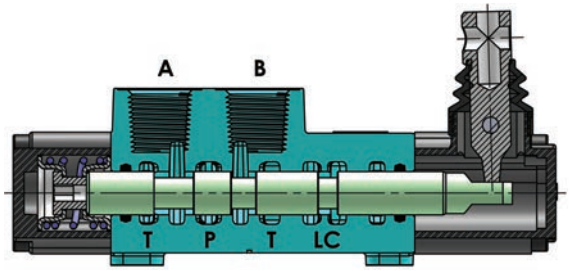

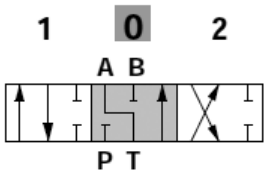

Spool Type - 3A

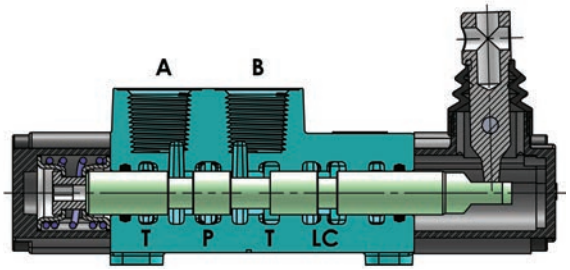

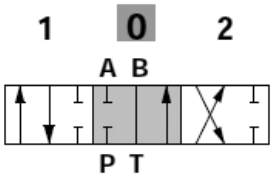

Spool Type - 4A

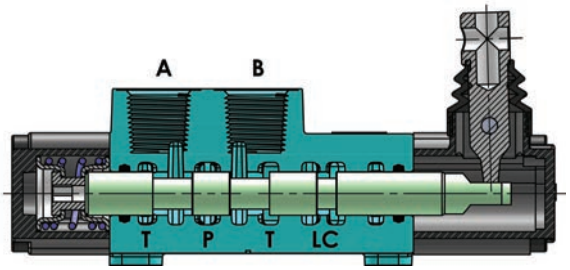

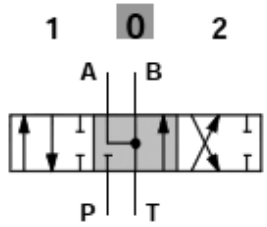

Spool Type - 5A

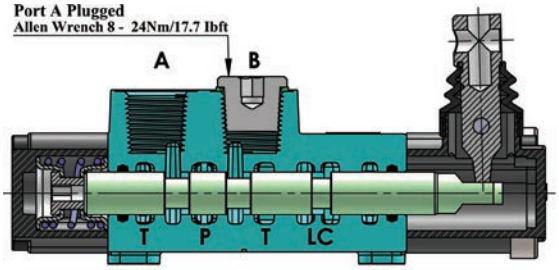

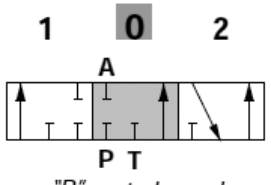

"B" port plugged

Spool Type - 6A

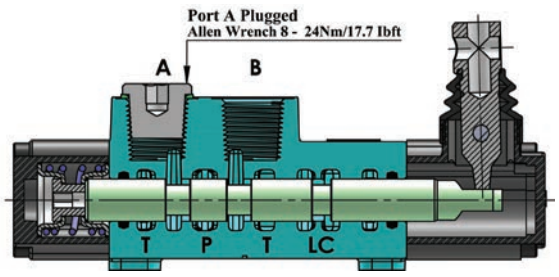

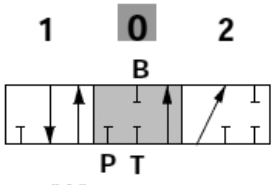

"A" port plugged

SPOOL POSITIONERS – SIDE OF RETURN

With Spring Return in Neutral Position

Kit No: **SR**

Sectional Appearance

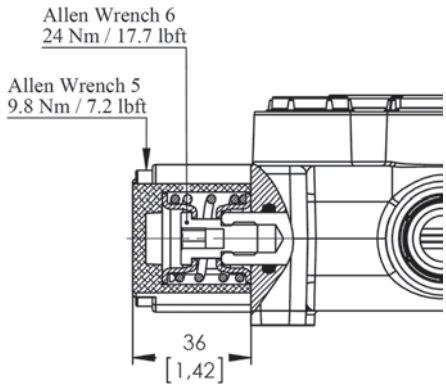

Diagram



With Detent

Kit No: **D**

Sectional Appearance

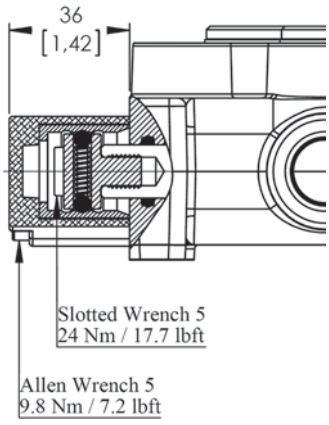

Diagram

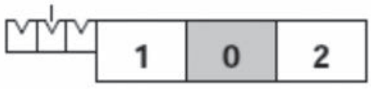

Force - stroke diagram

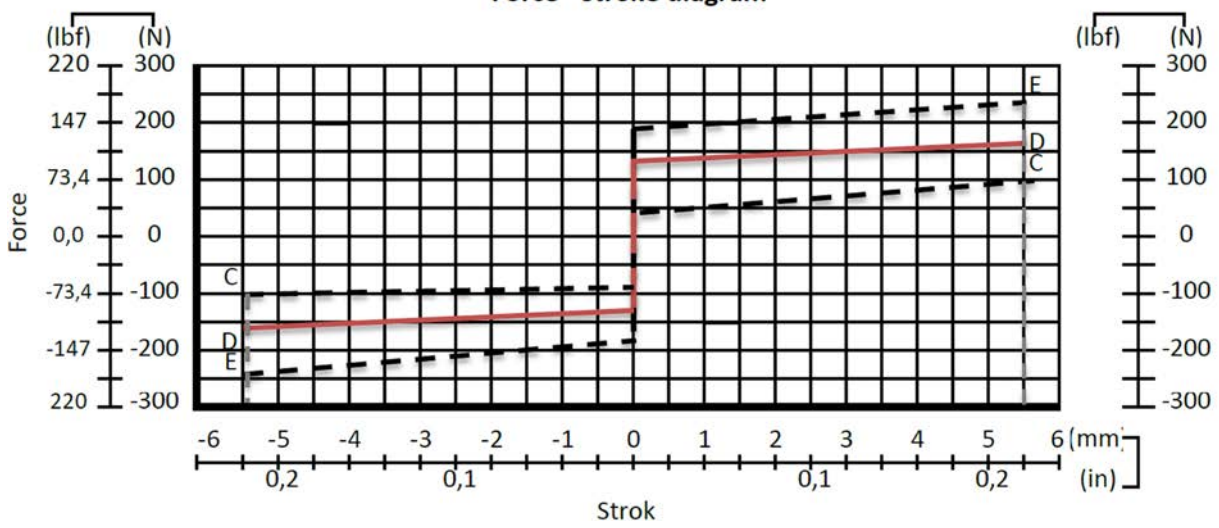

SPOOL POSITIONERS – SIDE OF RETURN

ON/OFF Pneumatic Control

Kit No: **45P**

Sectional Appearance

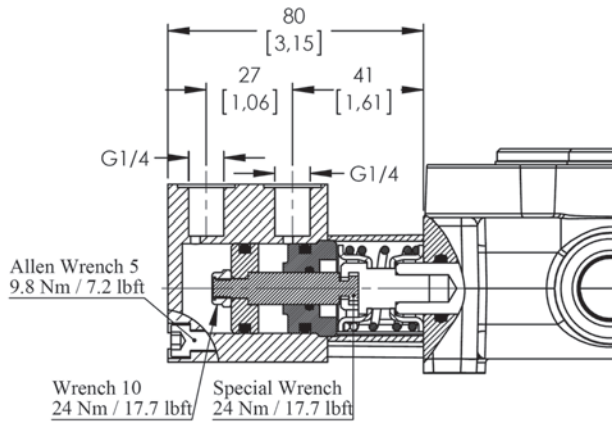

Diagram

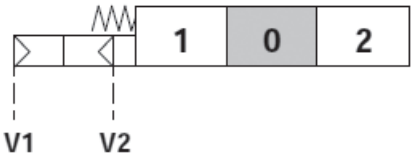

Operating Features
Pilot Pressure .....: 6 Bar (Max. 10) / 87 Psi (Max. 145)

ON/OFF Electro-Pneumatic Control

Kit No: **45EP**

Sectional Appearance

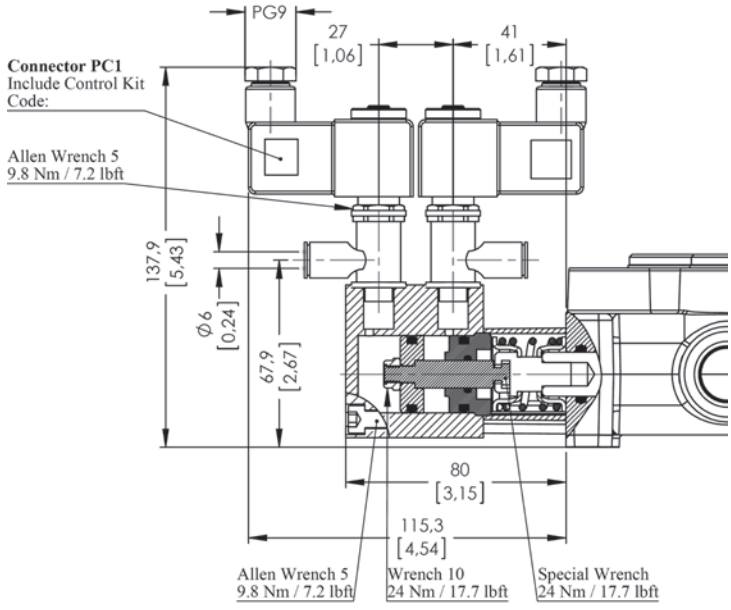

Diagram

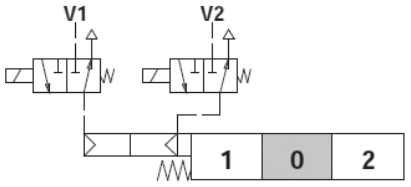

Operating Features
Pilot Pressure .....: 6 Bar (Max. 10) / 87 Psi (Max. 145)
Selenoid Operating Features
Nominal Voltage.....: 12VDC / 24 VDC
Power Rating.....: 6 W

SPOOL POSITIONERS – SIDE OF RETURN

ON/OFF Electro - Hydraulic Control

Kit No: **45EH**

Sectional Appearance

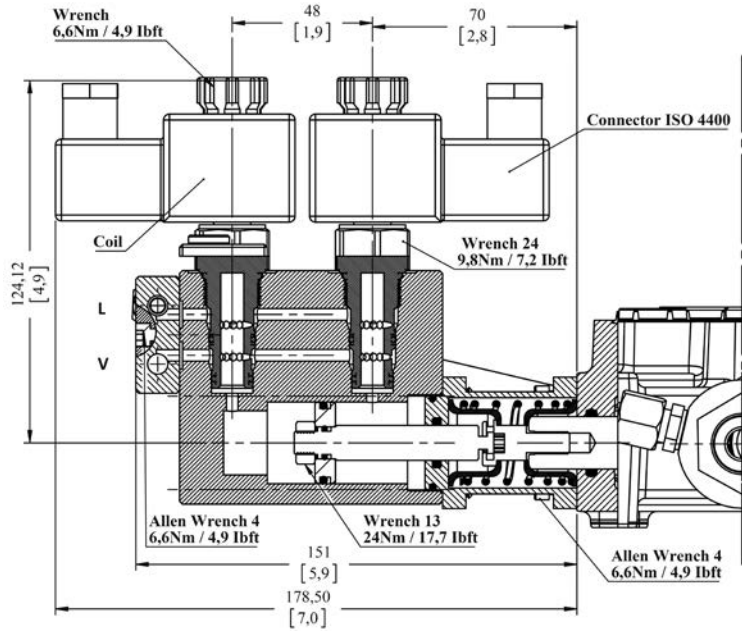

Diagram

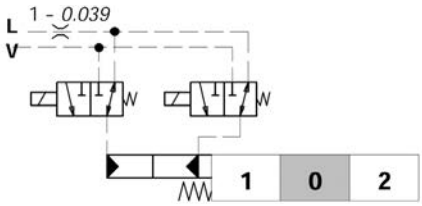

Operating Features

Pilot Pressure .....: 10 Bar / 145 Psi
: 50 Bar / 725 Psi
Max back pressure on drain L....:25 Bar / 360 Psi

Selenoid Operating Features

Coil Connection.....: ISO 4400
Nominal voltage.....: 12 VDC / 24 VDC
Power rating.....: 21 W
Duty cycle.....: %100
Protection type.....: IP 65
Nominal voltage tolerance.....: ±10
Max temperatures.....: 100 C°
Stroke.....: ±5,5 mm

ORDER CODE

External Pilot Collector
COL 11 - 10COL1001 – Kit For Section 1
COL 12 - 10COL1001 – Kit For Section 2
COL 13 - 10COL1001 – Kit For Section 3
COL 14 - 10COL1001 – Kit For Section 4
COL 15 - 10COL1001 – Kit For Section 5
COL 16 - 10COL1001 – Kit For Section 6
COL 17 - 10COL1001 – Kit For Section 7
COL 18 - 10COL1001 – Kit For Section 8

Standard Pilot Collector
COL 21 - 10COL2001 – Kit For Section 1
COL 22 - 10COL2001 – Kit For Section 2
COL 23 - 10COL2001 – Kit For Section 3
COL 24 - 10COL2001 – Kit For Section 4
COL 25 - 10COL2001 – Kit For Section 5
COL 26 - 10COL2001 – Kit For Section 6
COL 27 - 10COL2001 – Kit For Section 7
COL 28 - 10COL2001 – Kit For Section 8

SPOOL POSITIONERS – SIDE OF RETURN

ON/OFF Electro - Hydraulic Control Connections

Connection Type 1: **Collector kit for external pilot and drain**

Sectional Appearance

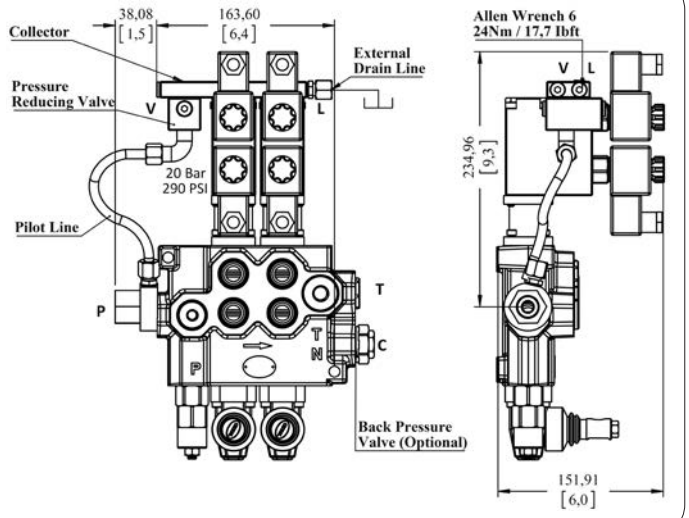

Diagram

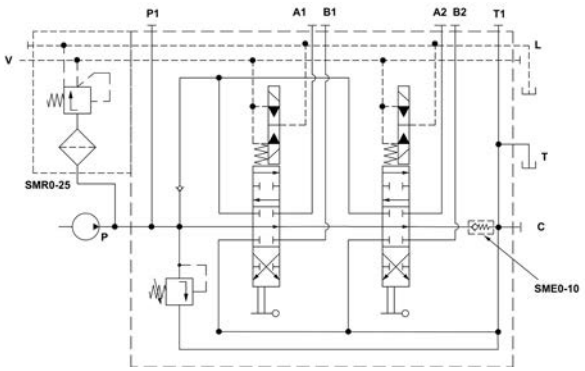

Operating Features
External Pressure Reducing Valve .....: 20 Bar / 290 Psi (For V line)
Code= ORV MS45-2P (SD(LA)-SMR2-125-PP)/P-1A-STL-45EH/ P-1A-STL-45EH (SMR0 -COL12-12V)/ SO-PT1 / SGT

Connection Type 2: **Collector kit with pilot and drain lines**

Sectional Appearance

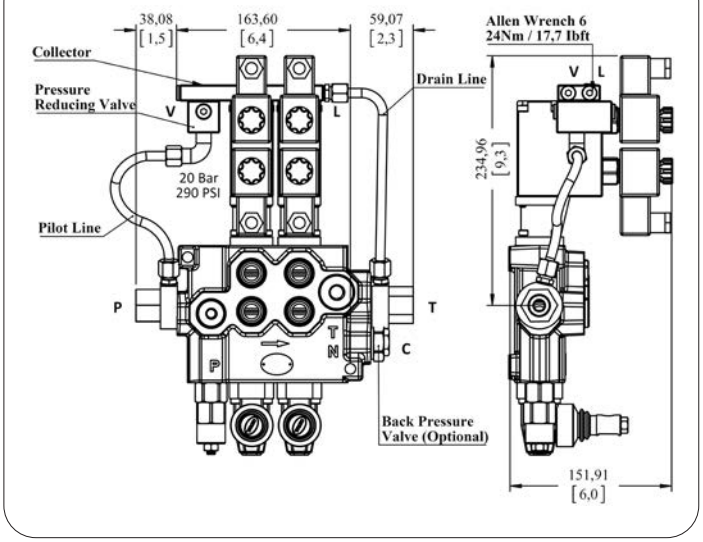

Diagram

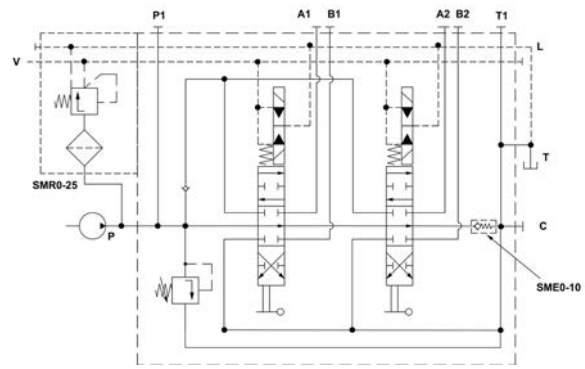

SMR 0-25 Valve Operating Features (Pressure reducing valve)
Outlet Pressure .....: 20 Bar / 290 Psi
Max. Flow.....: 8 l/min
Filtering .....:80 µ
Code= ORV MS45-2P (SD(LA)-SMR2-125-PP)/P-1A-STL-45EH/ P-1A-STL-45EH (SMR0 –COL22-12V)/ SO-PT1 / SGT

SPOOL POSITIONERS – SIDE OF LEVER CONTROL

Lever Controls

Kit No: **STL - L0**

Sectional Appearance

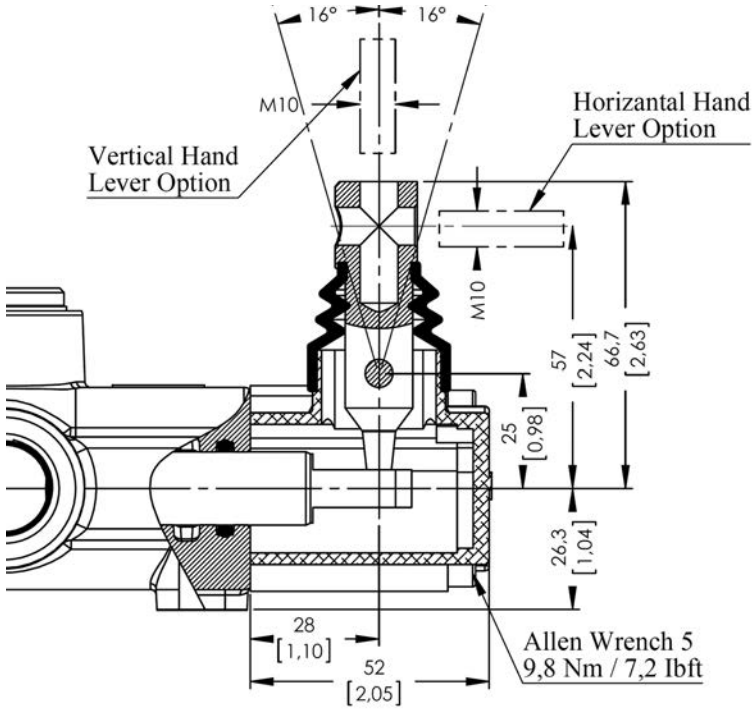

Diagram

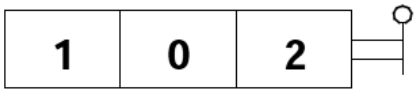

Kit No: **STL - L180**

Sectional Appearance

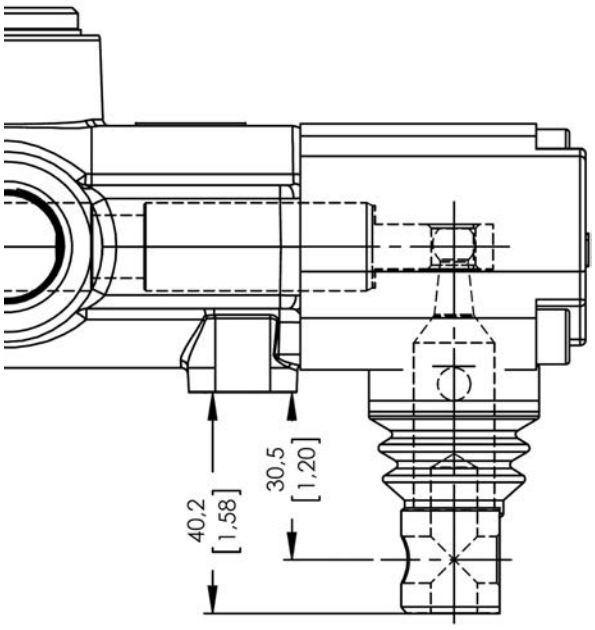

Diagram

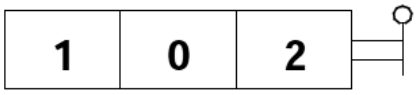

Note: Arm lever pivot box is aluminium cap protected. And it can be rotated 180º.

SPOOL POSITIONERS – SIDE OF LEVER CONTROL

Lever Controls - Joystick

Kit No: **JL**

Exploded View | Diagram

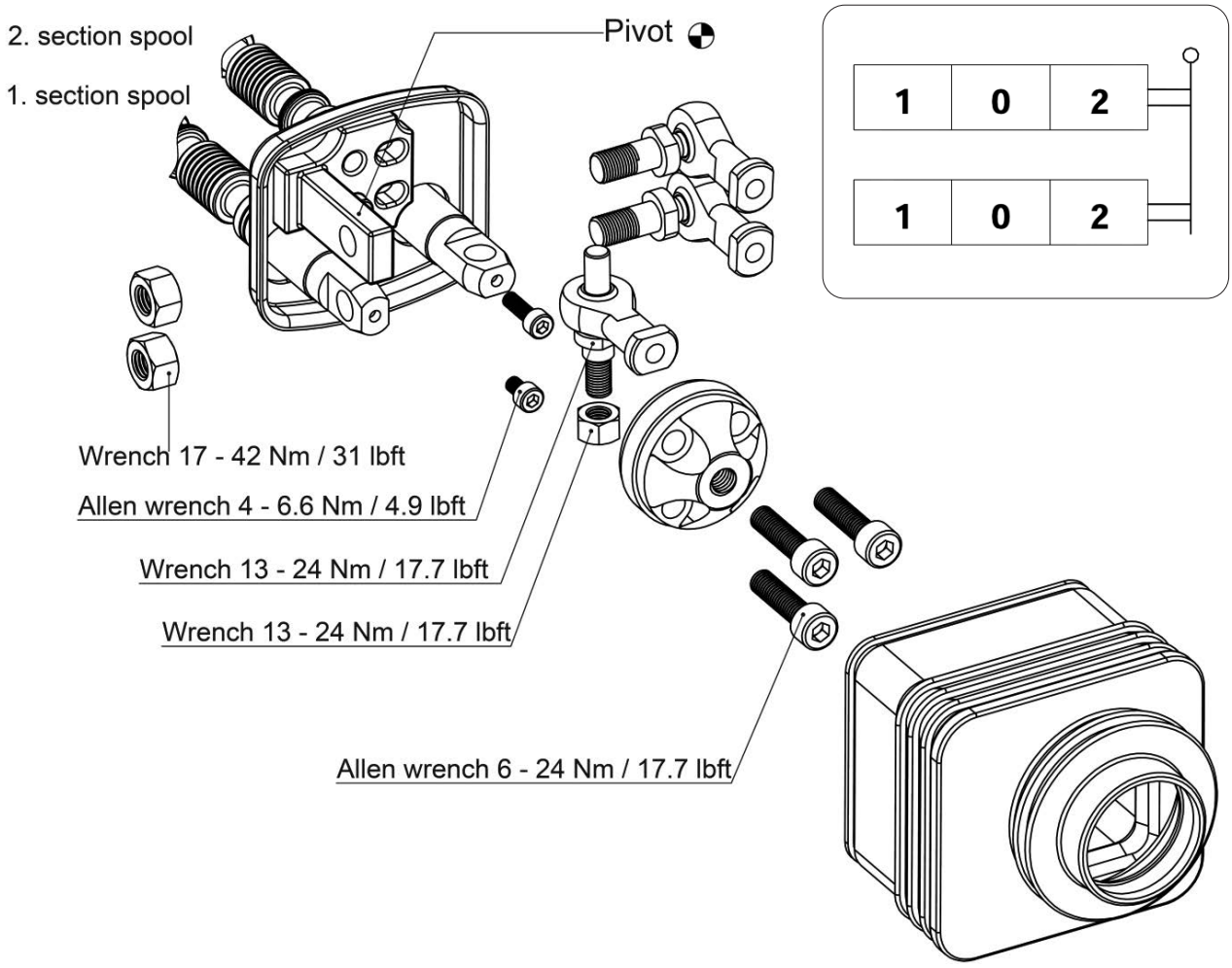

Operation Angle:

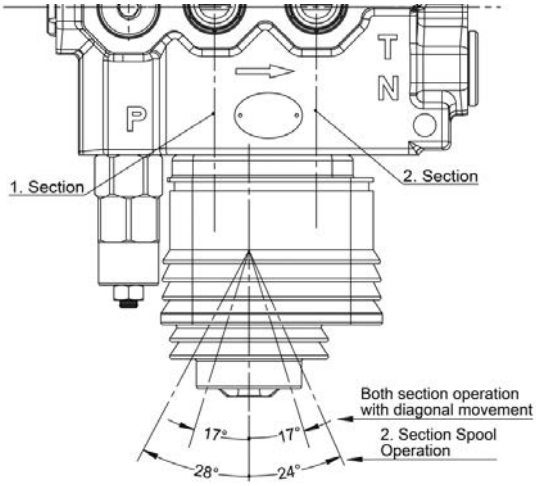

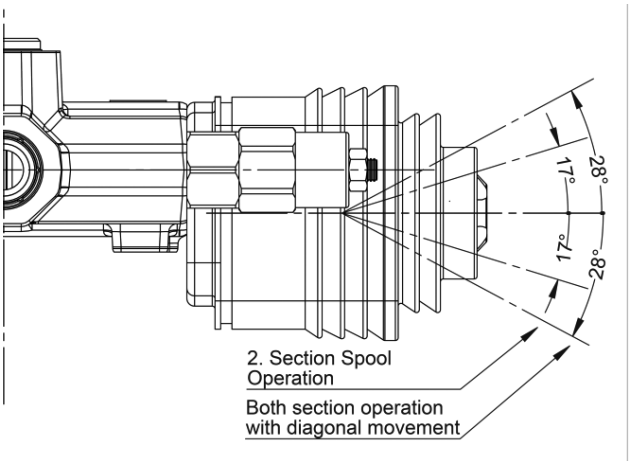

SPOOL POSITIONERS – SIDE OF LEVER CONTROL

Lever Controls - Joystick

Dimensions and movement sceme

Type No: **JL1** — Pivot placed down on the Left

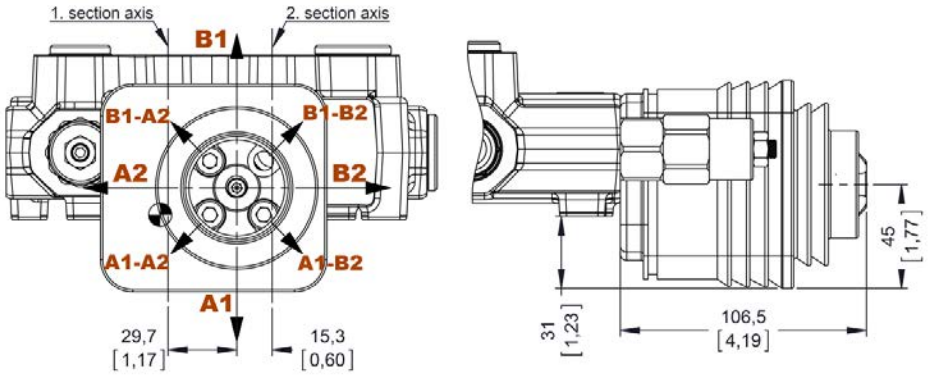

Type No: **JL2** — Pivot placed down on the right

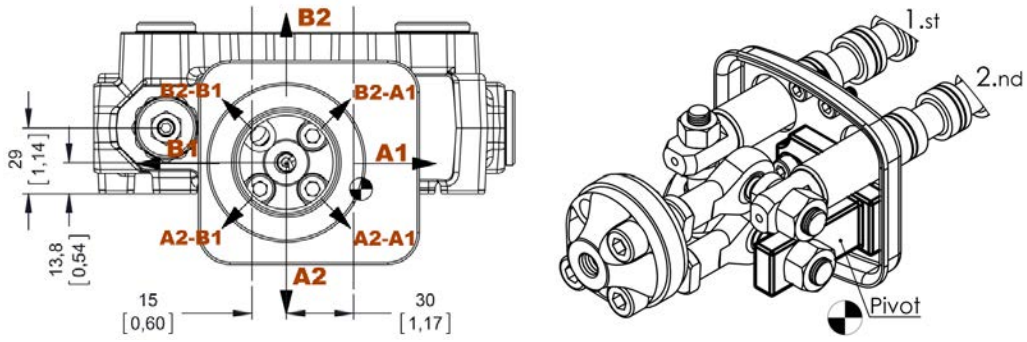

Type No: **JL3** — Pivot placed above on the Left

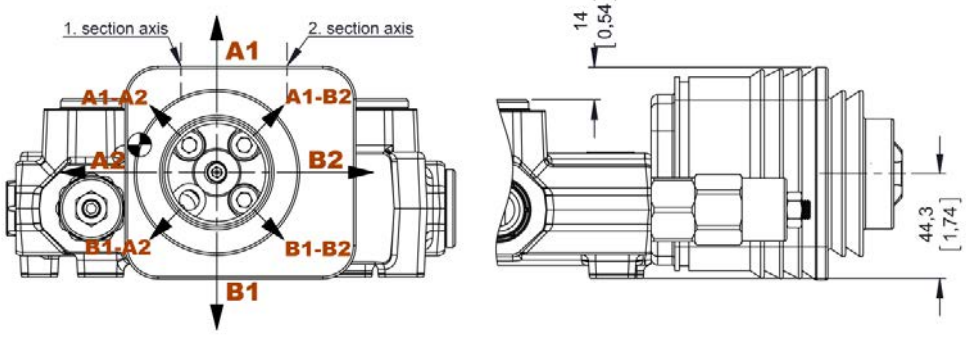

Type No: **JL4** — Pivot placed above on the right

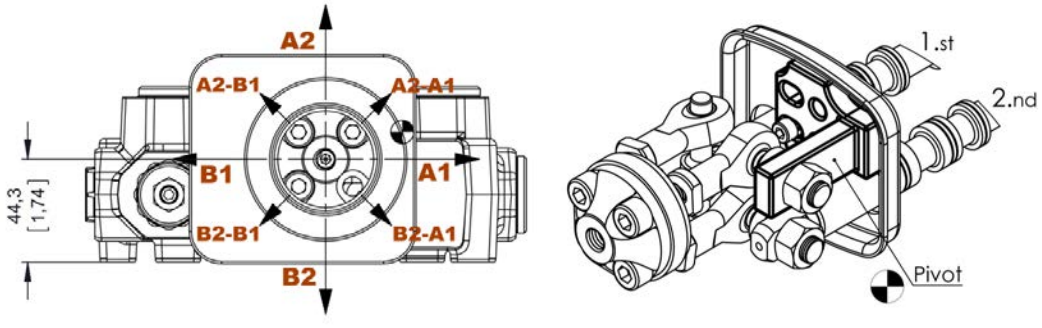

SPOOL POSITIONERS – SIDE OF LEVER CONTROL

Lever Controls - Cable Control

Kit No: **HL**

Exploded View | Diagram

Waterproof cap prearranged for remote control with flexible cable.

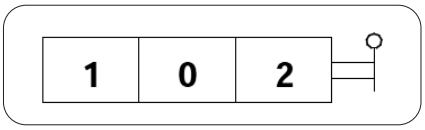

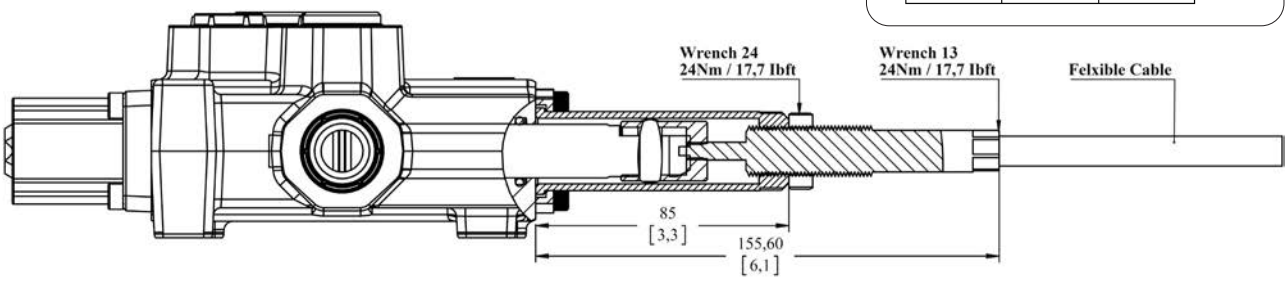

Note: Remote cable control is several options. Please indicte the cable length demanded and contact our sales department.

Example Operation

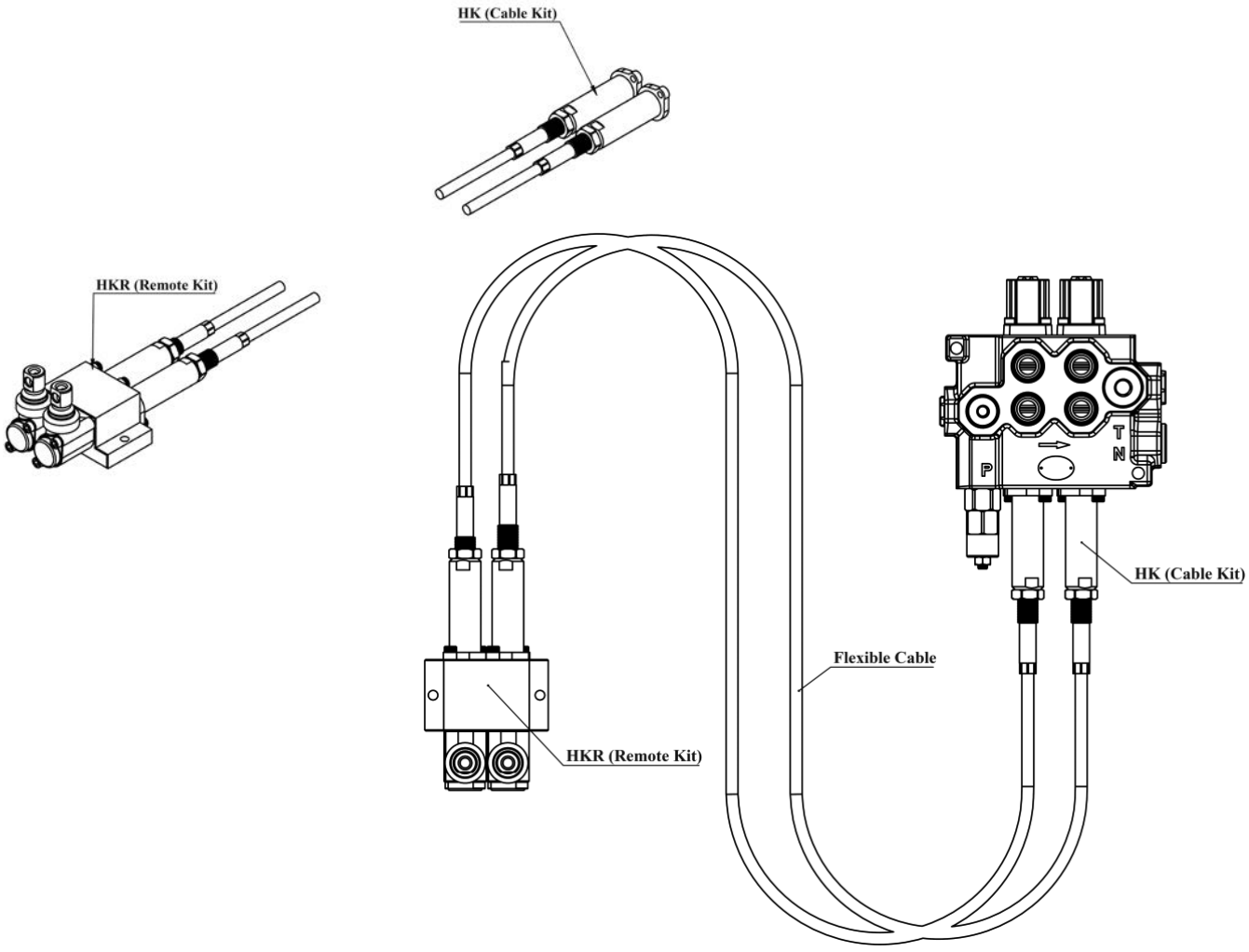

COMPLETE CONTROL – ON / OFF SOLENOID CONTROL

ON/OFF Solenoid Control

Kit No: **SEC**

Sectional Appearance

Electric wiring example

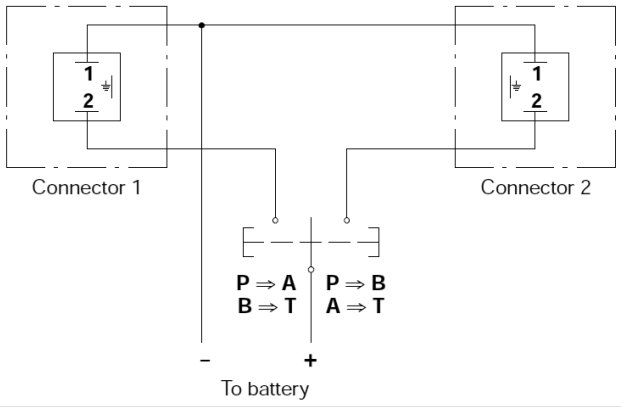

Diagram

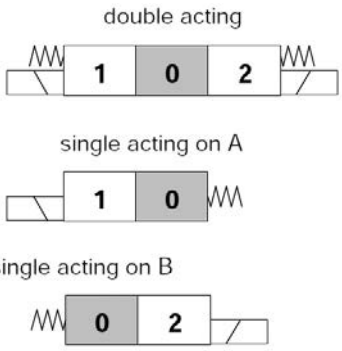

Operating Features

Max Working Pressure.....: 230 Bar / 3300 Psi
Max back pressure .....: 5 Bar / 80 Psi
Internal Lekage.....: 10 cm3 / min

Selenoid Operating Features

Nominal voltage.....: 12 VDC / 24 VDC
Power rating.....: 36 W
Duty cycle.....: %100
Nominal voltage tolerance.....: ±10
Coil insulation .....: Class H
Stroke.....: ±3

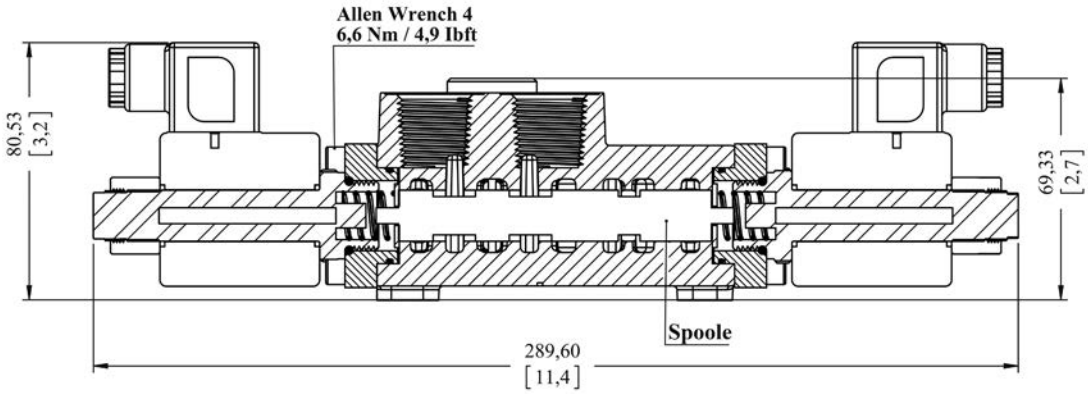

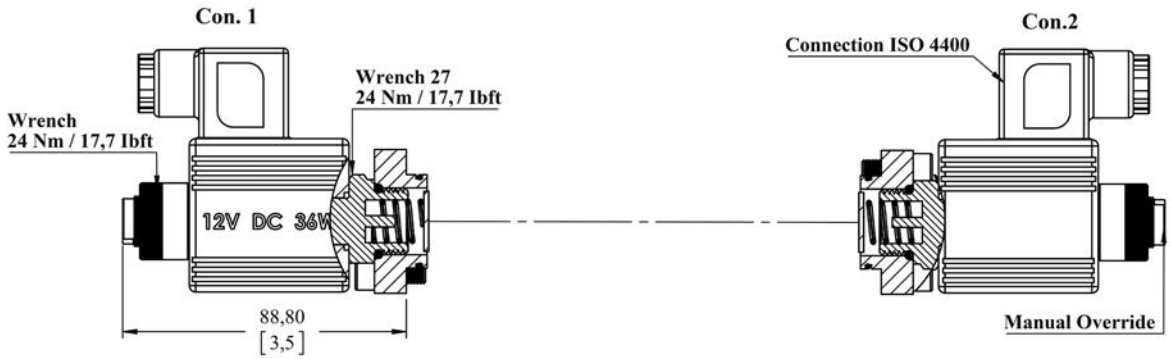

OUTLET PORT OPTIONS

Carry - Over Connection

Kit No: **CO**

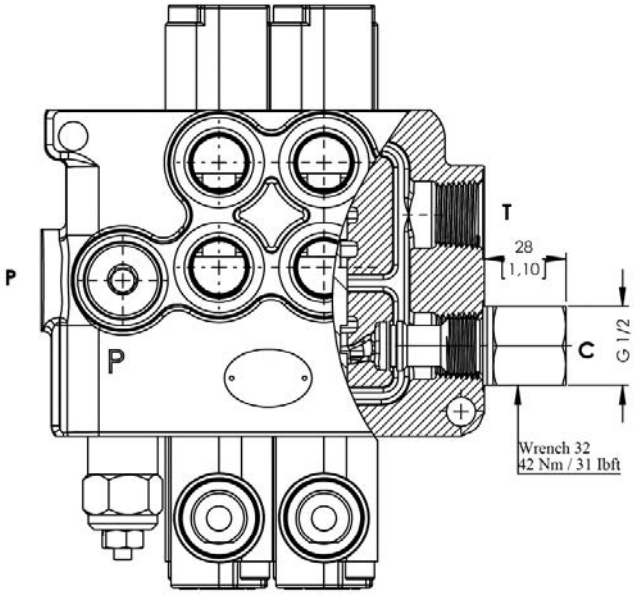

Sectional Appearance

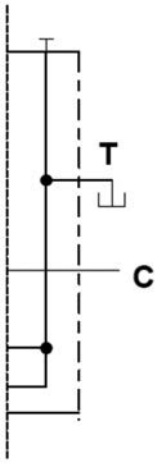

Hydraulic Circuit

Code: ORV M70-2P / SMR2-120 / 1A-SR-STL/1A-SR-STL/CO-PA1/SGT

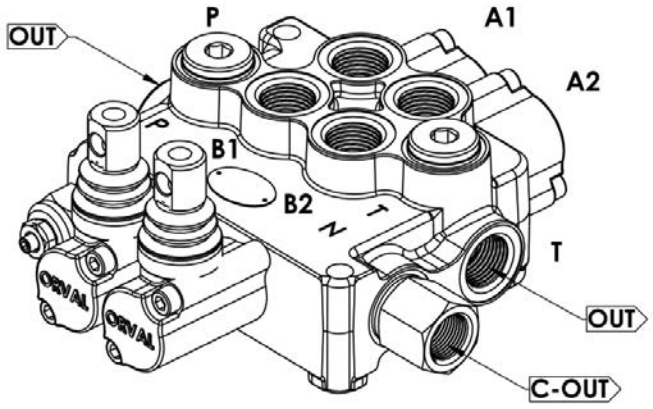

Direction of Port Connectted

SGT : See page 5 for Standard center

OUTLET PORT OPTIONS

Closed Center

Kit No: **CS**

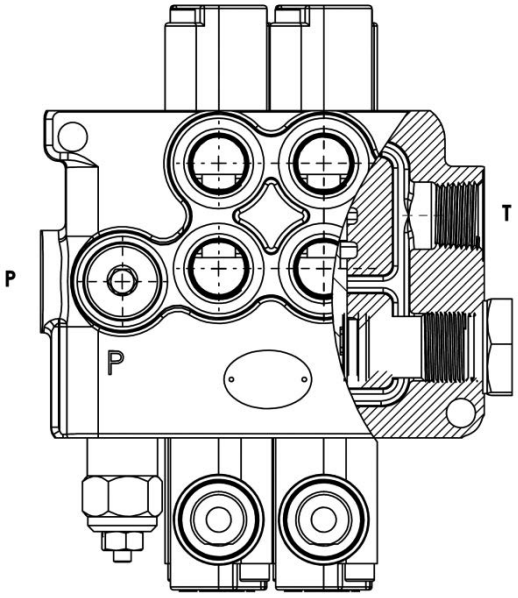

Sectional Appearance

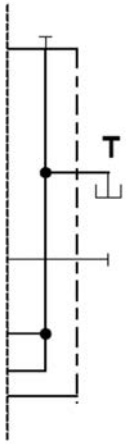

Hydraulic Circuit

Code: ORV MS45-2P / SMR2-120 / 1A-SR-STL/1A-SR-STL/CT-PA1/SGT

INSTALLATION AND MAINTENANCE

The ORV MS45 valve is assembled and tested as per the technical specification of this catalog. Before the final installation on your equipment, follow the below recommendation:

• The valve can be assembled in any position, in order to prevent body deformation and spool sticking, mount the product on a flat surface;

• In order to prevent the possibility of water entering the lever box and spool control kit, do not use high pressure wash down directly on the valve;

• Before painting, ensure plastic port plugs are tightly in place.

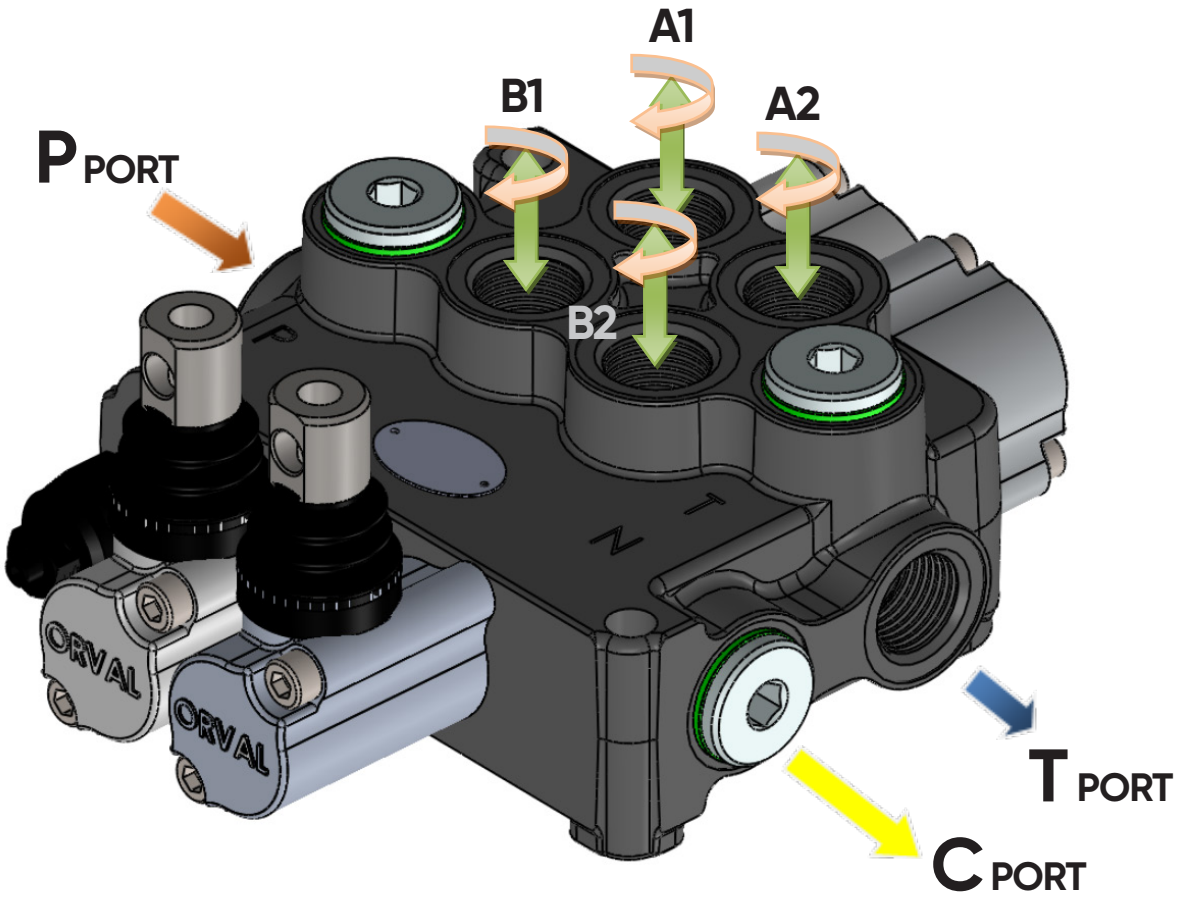

Threads Type (Nm / lbft)	P Port	A and B Port	T and C Port
BSP (ISO 228/1)	G 3/8	G 3/8	G 1/2
With O--Ring seal	35 / 25.8	35 / 25.8	50 / 36.9
With copper washer	40 / 29.5	40 / 29.5	60 / 44.3
With steel and rubber washer	30 / 22.1	30 / 22.1	60 / 44.3
BSP (ISO 228/1)	G 1/2	G 1/2	G 1/2
With O--Ring seal	50 / 36.9	50 / 36.9	50 / 36.9
With copper washer	60 / 44.3	60 / 44.3	60 / 44.3
With steel and rubber washer	60 / 44.3	60 / 44.3	60 / 44.3
UN--UNF (ISO 11926--1)	3/4--16 UNF--2B	9/16--18 UNF--2B	3/4--16 UNF--2B
With O--Ring seal	50 / 36.9	30 / 22.1	50 / 36.9
METRIC (ISO 262)	M18 x 1.5	M18 x 1.5	M18 x 1.5
With O--Ring seal	35 / 25.8	35 / 25.8	35 / 25.8
With copper washer	40 / 29.5	40 / 29.5	40 / 29.5
With steel and rubber washer	40 / 29.5	40 / 29.5	40 / 29.5

TECHNICAL DATA

Ports Dimensional Data

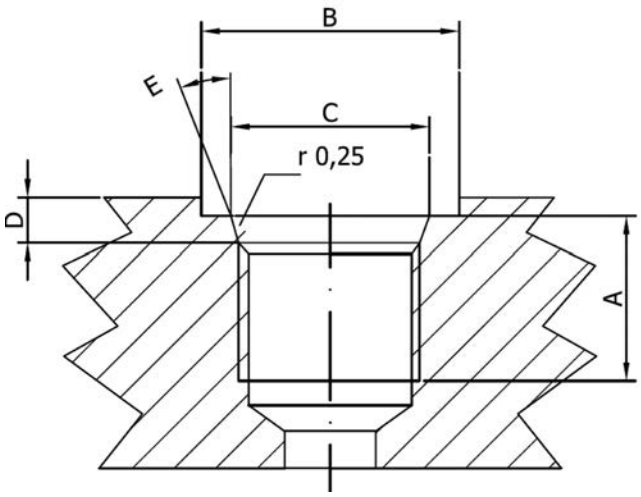

SAE UN-UNF (ISO 725)						
Dimensions		9/16-18 UNF SAE6		3/4-16 UNF SAE8		7/8-14 UNF SAE10
mm	in					
A		13	0,51	15	13	0,51	15
B		25	0,83	30	25	0,83	30
C		13,6	0,61	20,6	13,6	0,61	20,6
D		2,5	0,10	2,5	2,5	0,10	2,5
E		15°		15°		15°	

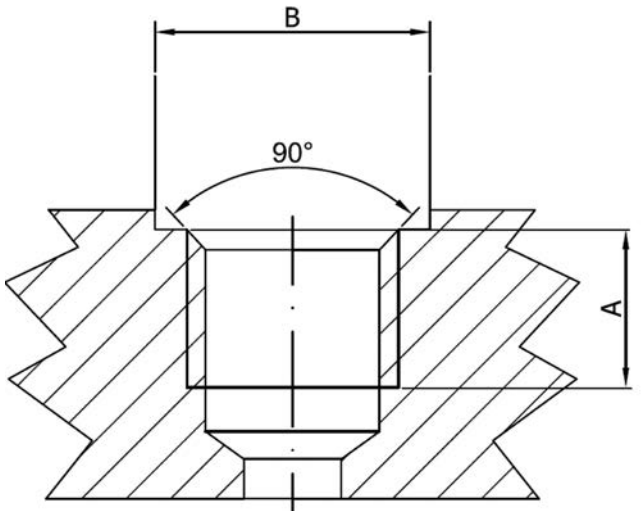

BSP (ISO 228)						
Dimensions		G1/4		G3/8		G1/2
mm	in					
A		14	0,55	14	14	0,55	14
B		19	0,75	23	19	0,75	23

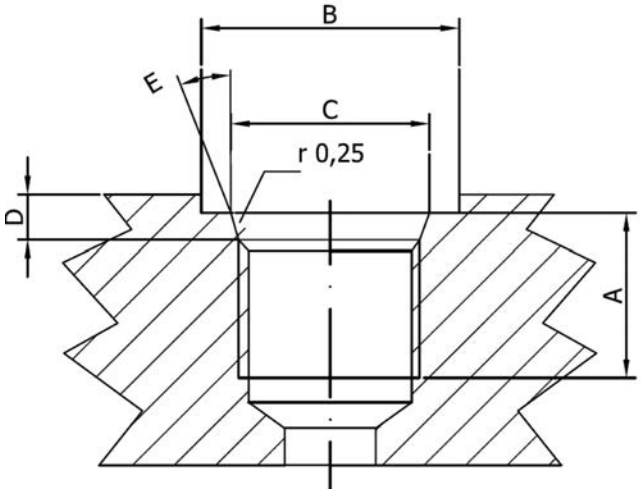

METRIC (ISO 262)					
Dimensions		M18x1,5 ISO 262		M22x1,5 ISO 262	
mm	in				
A		14	0,55	14	0,55
B		27,5	1,08	27,5	1,08

ORVAL HYDRAULIC

MONOBLOCK DIRECTIONAL CONTROL VALVES

ORV-M70

CE

TÜV International Certification
TÜV THÜRINGEN
CERT
AZAV
15 190 17185
TIC

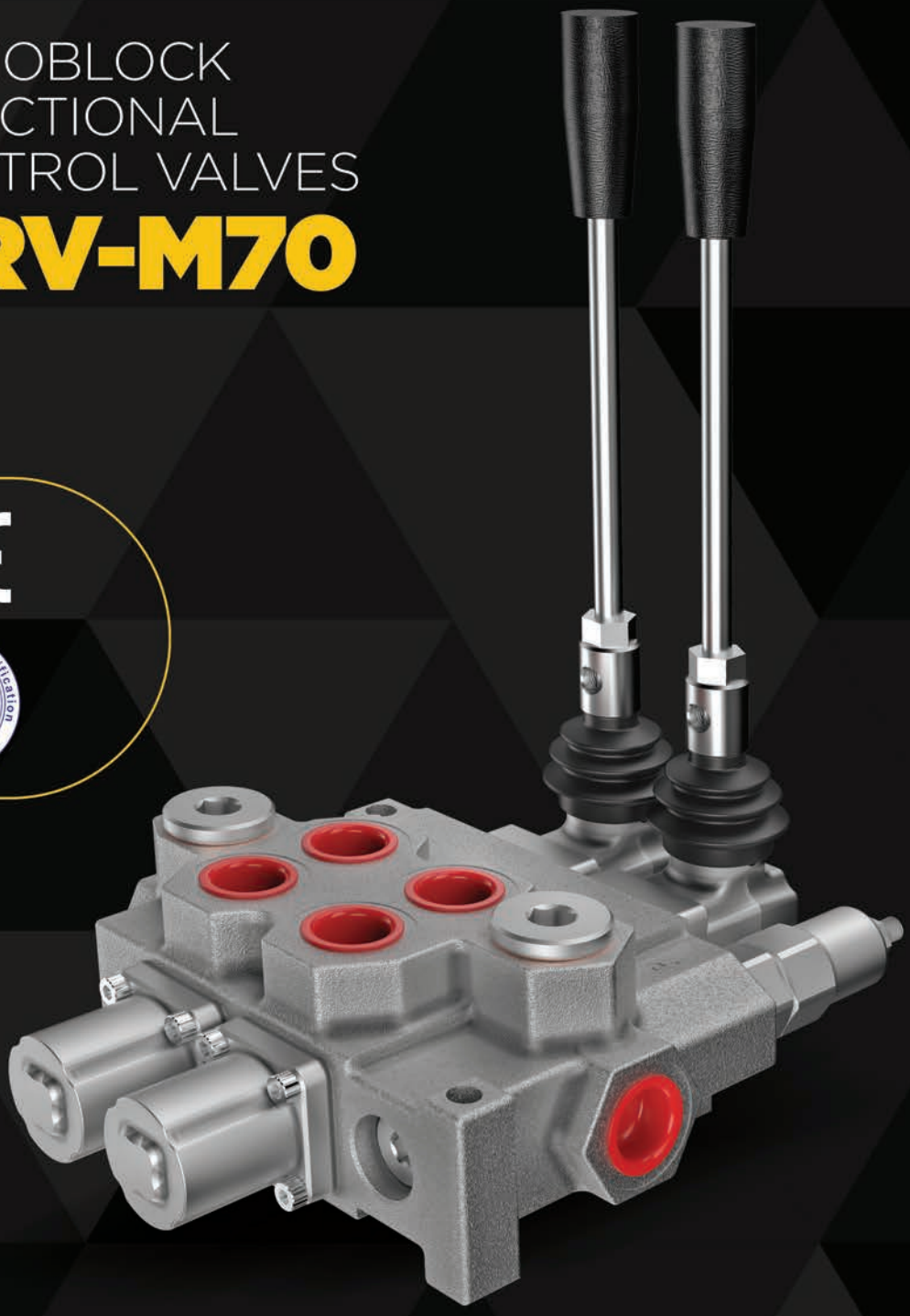



CONTENTS

Working Conditions	3
Dimensional Data	3
Hydraulic Circuit	3
Performance Data And Curve	3
Inlet Relief Options	3
Ordering Codes	3
Spool Options	3
Spool Positioners – Side of Return	3
Spool Positioners – Side of Lever Control	3
Spool Positioners – Side of Lever Control	3
Spool Positioners – Side of Lever Control	3
Spool Positioners – Side of Lever Control	3
Complete Control – On / Off Solenoid Control	3
Outlet Port Options	3
Outlet Port Options	3
Installation and Maintenance	3
Technical Data	3

Additional Informations

Note: This catalog shows the product in the most standard configurations. For other configurations, more detailed information or special request, Please contact Customer Service Dpt.

Warning!: All specifications of this catalog refer to the standard product at this date (01/2020). ORVAL, oriented to a continuous improvement, reserves the right to discontinue, modify or revise the specifications, without notice.

ORVAL IS NOT RESPONSIBLE FOR ANY DAMAGE CAUSED BY
AN INCORRECT USE OF THE PRODUCT.

WORKING CONDITIONS

Nominal Flow Rating / Displacement	70 l/min	18 U.S.G.P.M
Maximum Working Pressure (Parallel Circuit)	315 Bar	4600 PSI
(Series Circuit)	250 Bar	3600 PSI
Max. Back Pressure	25 Bar	360 PSI
Oil Temperature with NBR Seals	-20 to 80 C°	-4 to 176 F °
with FPM (Viton) Seals	-20 to 100 C°	-4 to 212 F °
Oil Viscosity – Operating Range	From 10 to 75 mm2/s	From 10 to 75 cSt
Minumum / Maximum	10 / 400 mm2/s	10 / 400 cSt
Oil Filtration	≤30 µ	
Ambiant Temperature Range	-35 to 60 C°	-31 to 140 F °
Number Of Spools		1 to 6
Internal Leakage (at 100 bar (1450 PSI), 40C° (110 F°), 46 cSt – A(B)–T)	3 cm3/min	0,18 in3/min
Max. Level Of Contamination	19/16 - ISO 4406	

Not: This catalogue shows technical specifications measured with mineral oil of 46 mm2/s-46 cSt viscosity at 40 C° temparture.

Features

• Simple, compact and heavy duty designed monoblock valves from 1 to 6 sections for open and closed center hydraulic systems.
• Fitted with a main pressure relief valve and a load check valve.
• Optionaly Carry-Over port only parallel circuit.
• Interchangeable spool diameter is 18 mm – 0,71 in.
• Available manual, pneumatic, hydraulic and electro-pneumatic spool control kits.

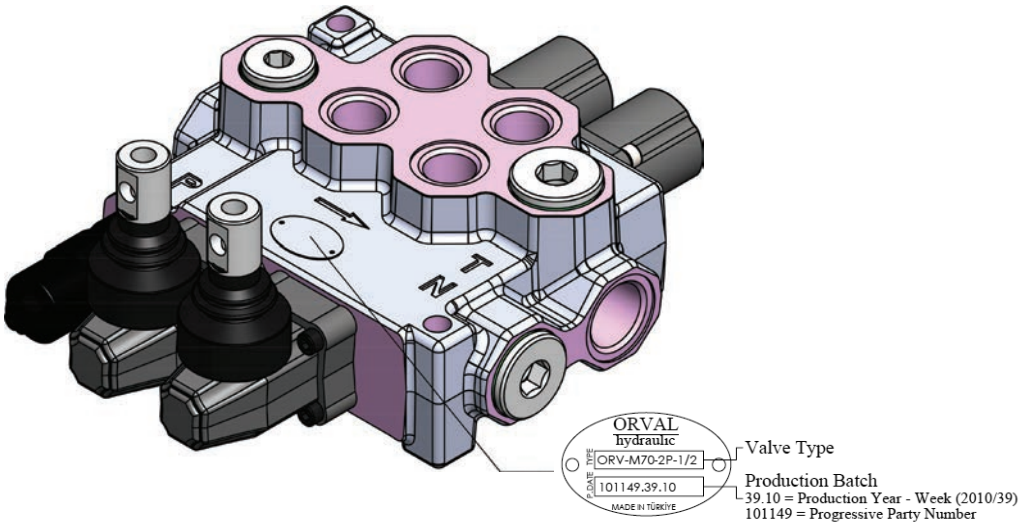

DIMENSIONAL DATA

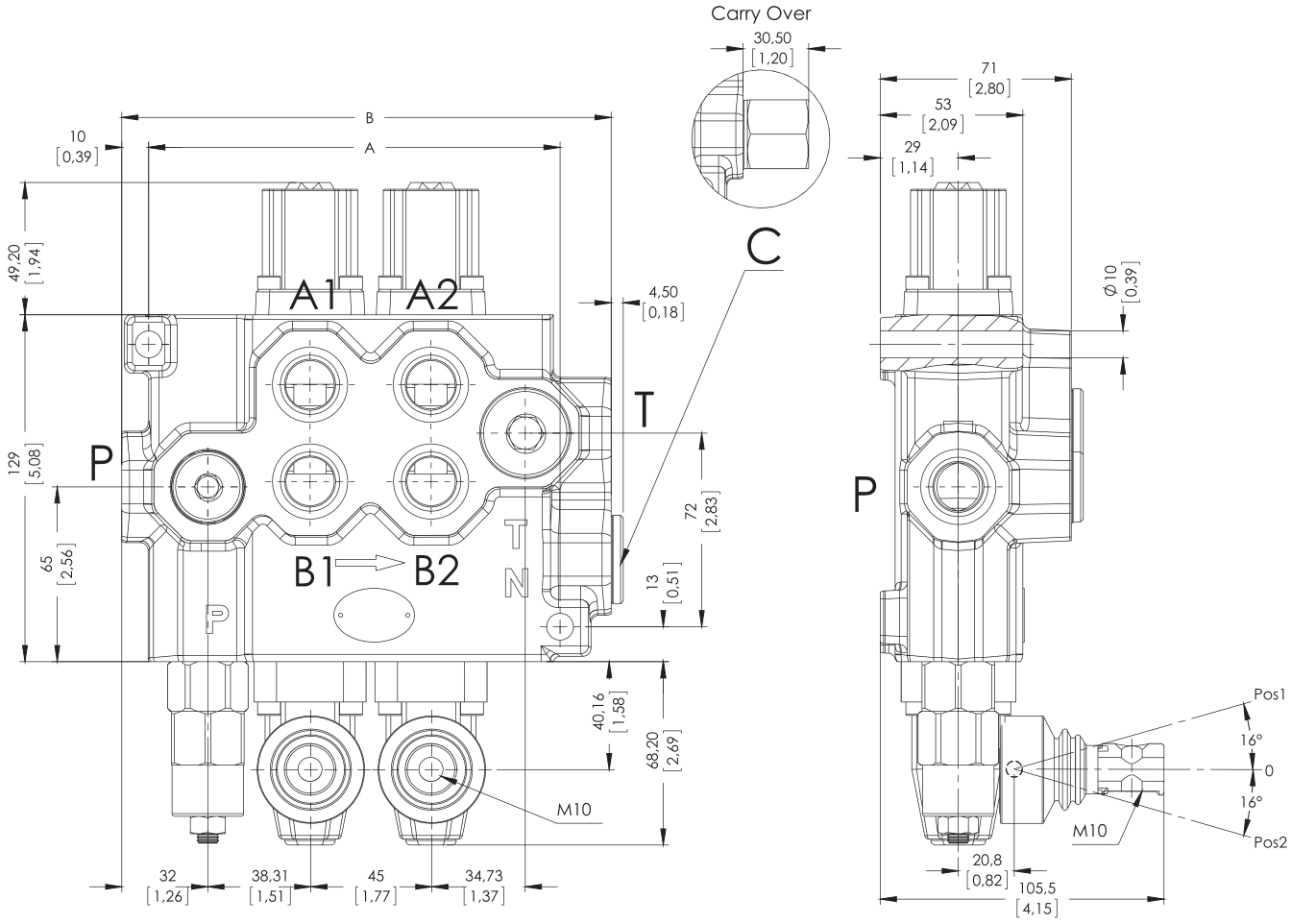

TYPE	A		B		Weight	
	mm	in	mm	in	Kg	lb
ORV-M70-1P	108	4,25	137	5,40	5,65	12,45
ORV-M70-2P	153	6,03	182	7,17	8,25	18,18
ORV-M70-3P	198	7,80	227	8,94	10,85	23,92
ORV-M70-4P	243	9,57	272	10,72	13,45	29,65
ORV-M70-5P	288	11,35	317	12,49	16,05	35,38
ORV-M70-6P	333	13,12	362	14,26	18,65	41,11

STANDARD THREADS

PORT	BSP (Iso 228) 1/2" Series	BSP (Iso 228) 3/4"Series	UN-UNF (Iso 11926-1)	Metric (Iso 262)
P Inlet	G 1/2	G 3/4	1 1/16-12 UN	M27x2
A-B Ports	G 1/2	G 3/4	7/8-14 UNF	M22x1.5
T Outlet	G 3/4	G 3/4	1 1/16-12 UN	M27x2
Pneumatic	G 1/4	G 1/4	NPTF 1/8 - 27	NPTF 1/8 - 27
Carry-Over	G 3/4	G 3/4	1 1/16-12 UN	G 3/4

HYDRAULIC CIRCUIT

Parallel - Standard Configurations With Side Inlet And Outlet Open Center

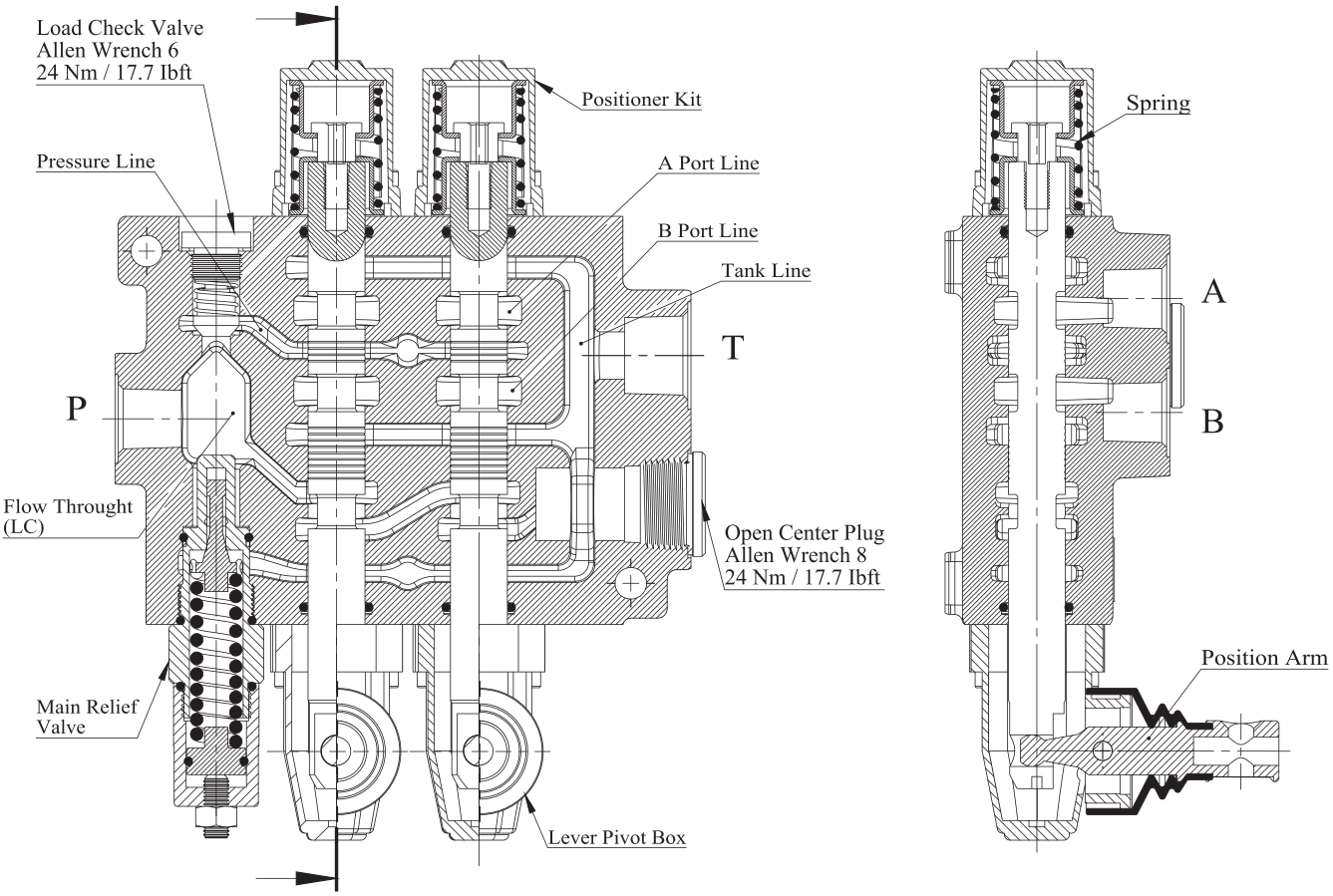

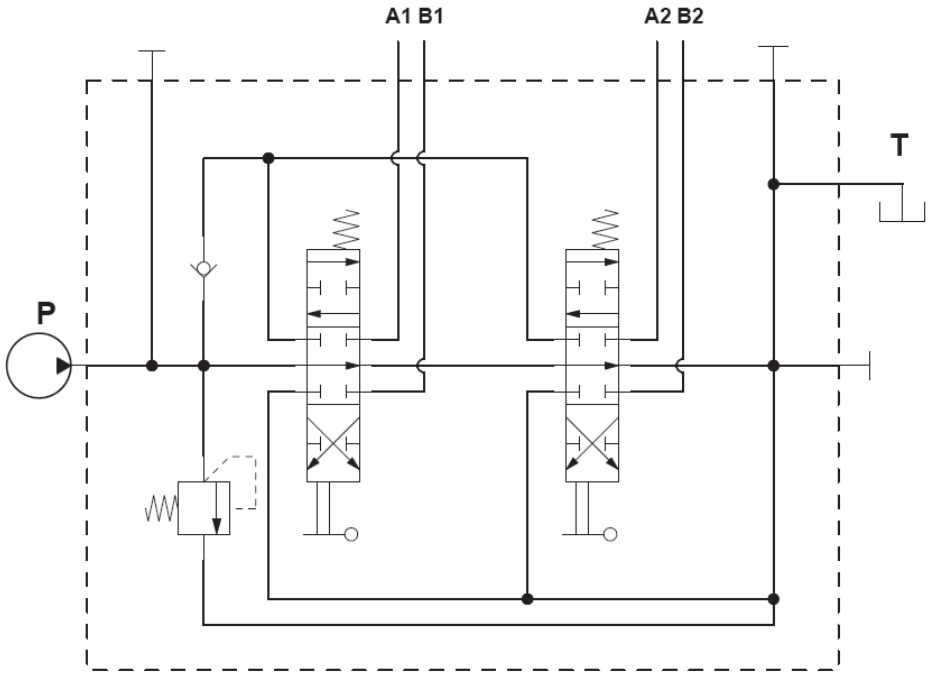

Code: ORV M70-2P / SMR2-120 / 1A-SR-STL/1A-SR-STL/PA1/SGT

PERFORMANCE DATA AND CURVE

Open Center - Pressure Drop (P-T)

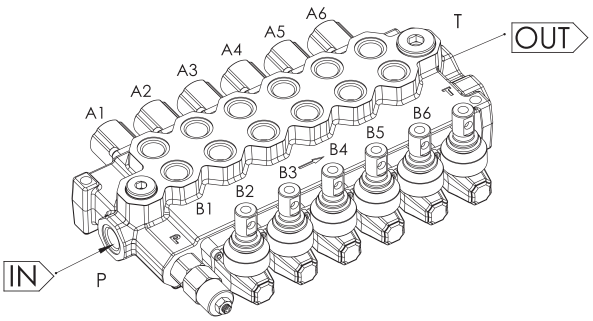

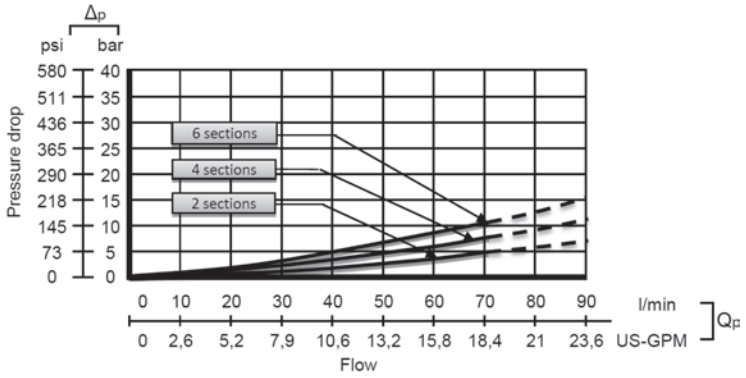

Inlet to Work Port - Pressure Drop (P-A/B)

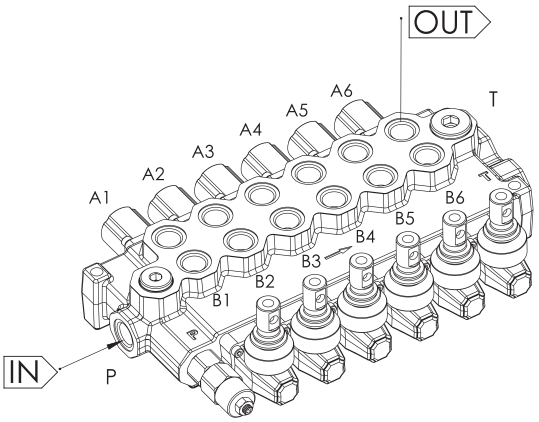

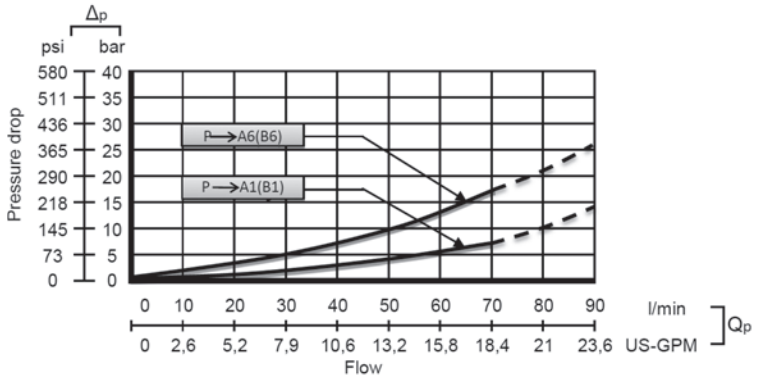

Work Port to Outlet - Pressure Drop (A/B-T)

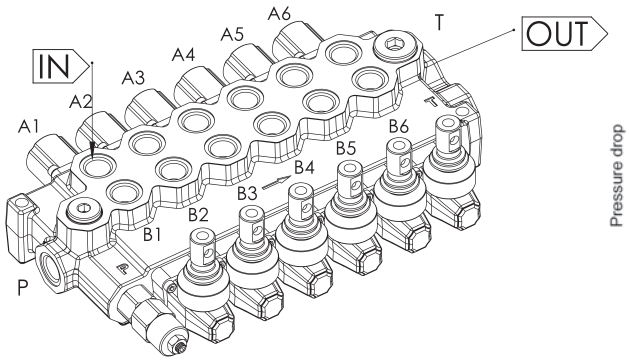

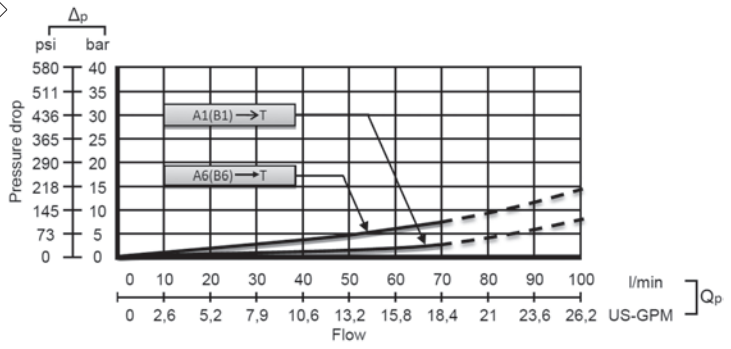

Note: Measured and chart value with spool type 1A.

INLET RELIEF OPTIONS

Direct Pressure Relief Valve

Code:

SMR2 – 120

- **Pressure Setting Bar in (Standard 120 bar)**
- **Standard Main Relief Spring Type -2**

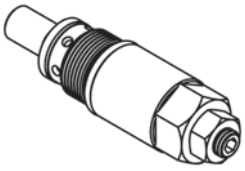

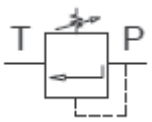

Performance Data

Spring Type Number: 1
Setting= 80 Bar -Range=63-125 Bar

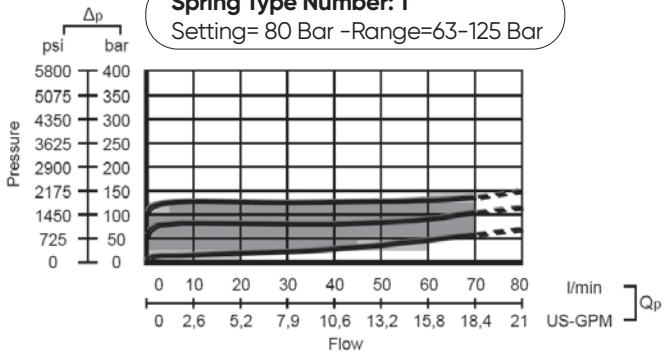

Spring Type Number: 3
Setting= 220 Bar -Range=200-315 Bar

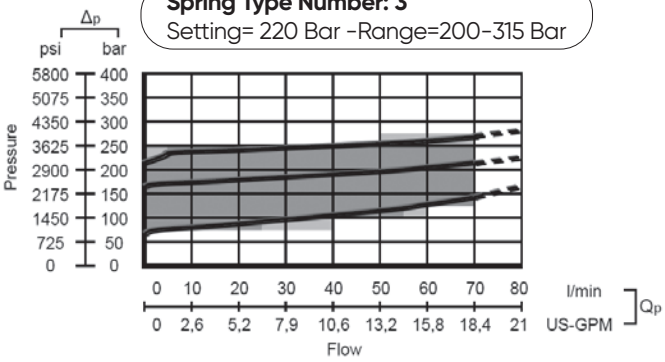

Spring Type Number: 2
Setting= 120 Bar -Range=100-165 Bar

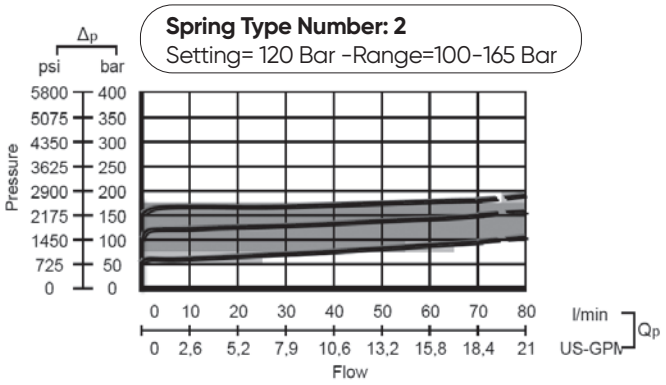

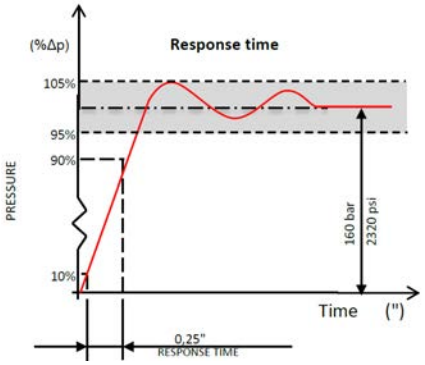

Adjustment Type on Valve

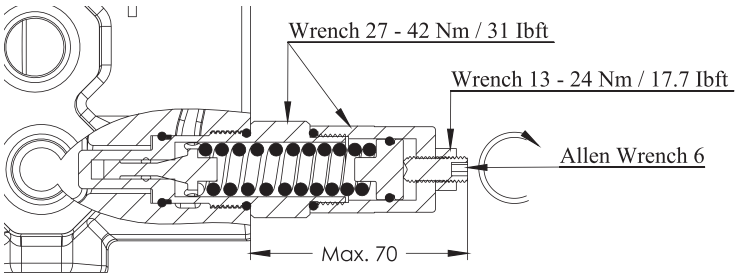

Relief Blanking Plug - WM

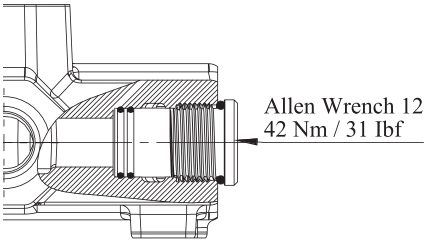

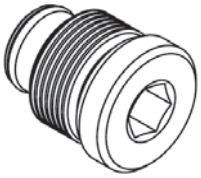

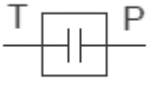

ORDERING CODES

Order Example

ORV M70-2P / SMR2-120 / 1A-SR-STL / 1A-80P-STL / CO - PL1 - P1 / SGT

1 | 2 | 3 4 5 | 1A-80P-STL | 6 7 8 | 9

3 4 5: 1 st Section

1A-80P-STL: Following Section

6 7 8: Output Section

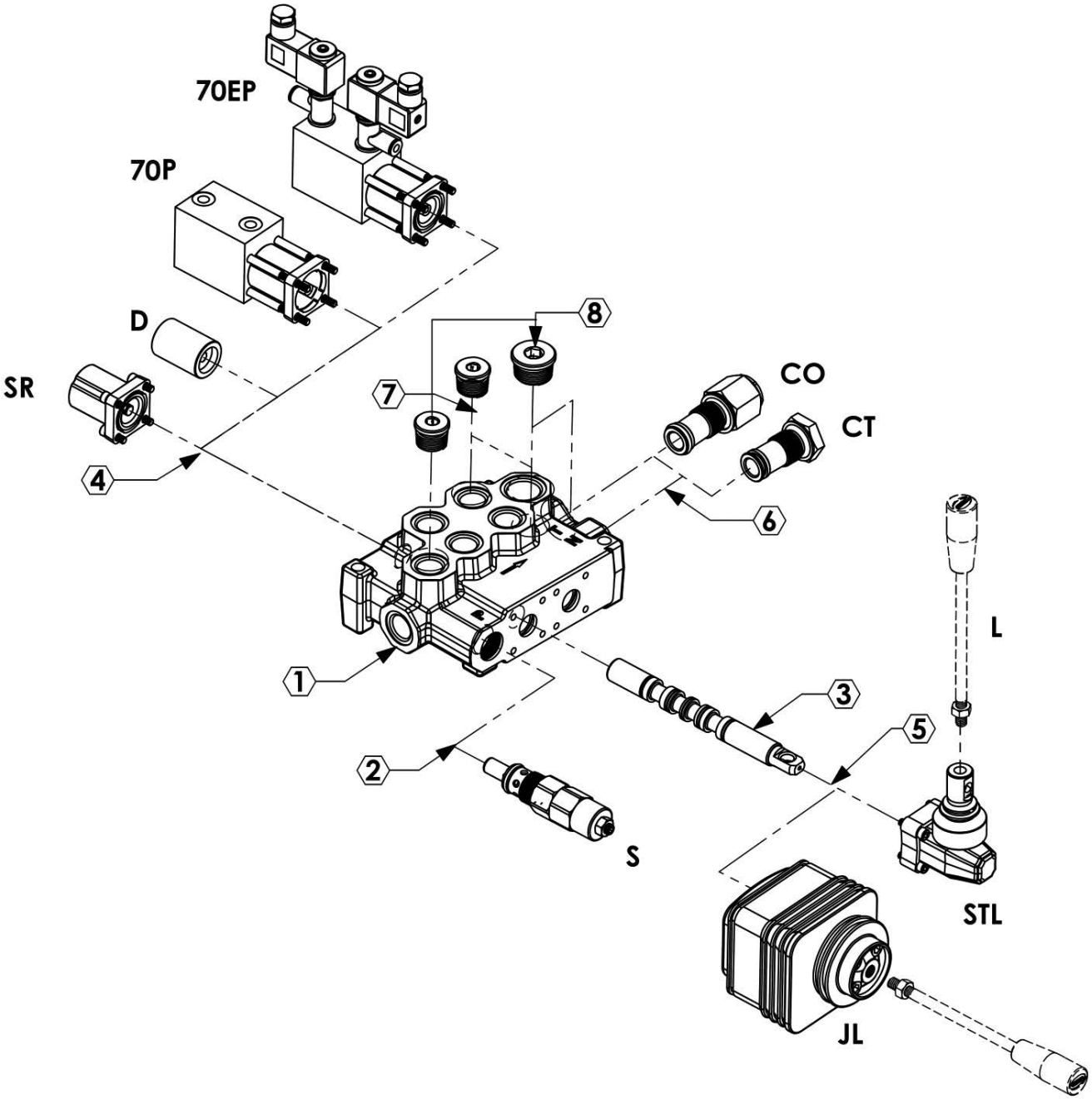

ORDERING CODES

1- Valve Type and Body

M70 = Valve Type - (M) - Monoblok
(70) - Max. Flow Rate
1P = Body for 1 Section - (1BM170100)
2P = Body for 2 Sections - (1BM270100)
3P = Body for 3 Sections - (1BM370100)
4P = Body for 4 Sections - (1BM470100)
5P = Body for 5 Sections - (1BM570100)
6P = Body for 6 Sections - (1BM670100)

2- Pressure Relief Options

SMR = Standard direct pressure relief valve
SMR1-080 – (2SMR170080)–Range 63-125 bar
Setting 80 bar
SMR2-120 – (2SMR270120)–Range 100-165 bar
Setting 120 bar
SMR3-220 – (2SMR370220)–Range 200-315 bar
Setting 220 bar

3- Spool Options

1A -(3SM170110) – 3 Positions ,Double acting
2A -(3SM170120) – 3 Positions ,Double acting
A to tank B Blocked
3A -(3SM170130) – 3 Positions ,Double acting
B to tank A blocked
4A -(3SM170140) – 3 Positions ,Double acting
A and B tank
5A -(3SM170150) – 3 Positions ,Single acting on
A (A to tank)
6A -(3SM170160) – 3 Positions ,Single acting on
B (B to tank)

4- Spool Positioners

SR = Spring Return in neutral position – (4SR080100)
D = Detent in position 1, neutral and 2 - (4D080100)
80P = ON/OFF Pneumatic – (445P045100)
80EP = 12 VDC ON/OFF electro-pneumatic –
(480EP080112)
80EH = 12 VDC/24 VDC ON/OFF electro-hydraulic
(3645EH100112)

5- Lever Options

STL = Standard lever –(5STL080100)
JL = Joystick lever for two sections operation
- (5JL 080100)

6- Output Options

PA2(T) =G3/4 Top output plug - (6PL1080134)
PA2(S) =G3/4 Side output plug - (6PL1080134)
CO =G3/4 Carry–Over Connector - (6CO080100)
CT = G3/4 Carry–Over Plug - (6CT070100)

7- Ports Plug Options "If Required"

PL3(5A) = Plug for single action spool for 5A
G3/4 –(6PL1080134)
PL3(6A) = Plug for single action spool for 6A
G3/4 –(6PL1080134)
PL2(5A) = Plug for single action spool for 5A
G1/2- (6PL1040112)
PL2(6A) = Plug for single action spool for 6A
G1/2- (6PL1040112)
*Page 12 for detail spool options.

8- Ports Input Plug Options

PI1(T) = G1/2 Top input – (6PL1040112)
PI1(S) = G1/2 Side input – (6PL1040112)
PI3(T) = G3/4 Top input - (6PL1080134)
PI3(S) = G3/4 Side input - (6PL1080134)

9- Ports Thread Options

SGT1 = 1/2" Series Port Options - (9P045112)
SGT3 = 3/4" Series Port Options - (9P080134)
UNF = UNF Series Port Options - (9U045138)
M = Metric Series Port Options - (9M045138)
*Page 4 for detail port information.

HandLever

L = Standard HandLever (L=120mmxM8) - (7L040100)
HL = Remote Cable Kit – (80HL80100)

SPOOL OPTIONS

Spool Type - 1A

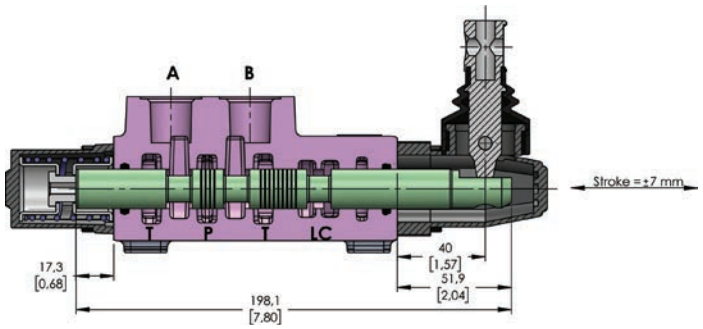

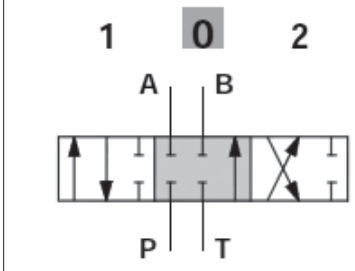

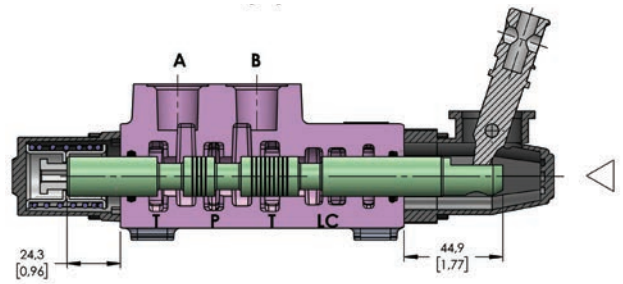

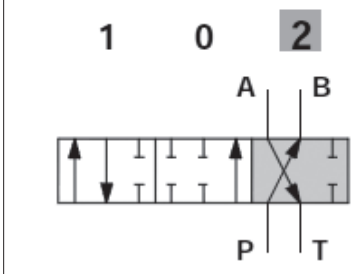

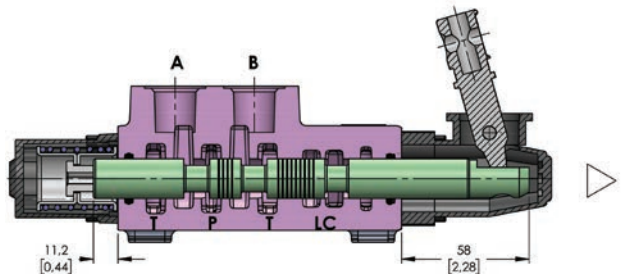

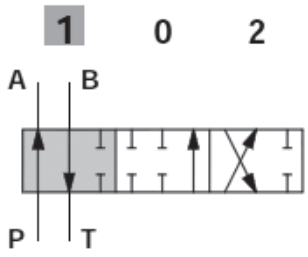

Performance Curve And Data

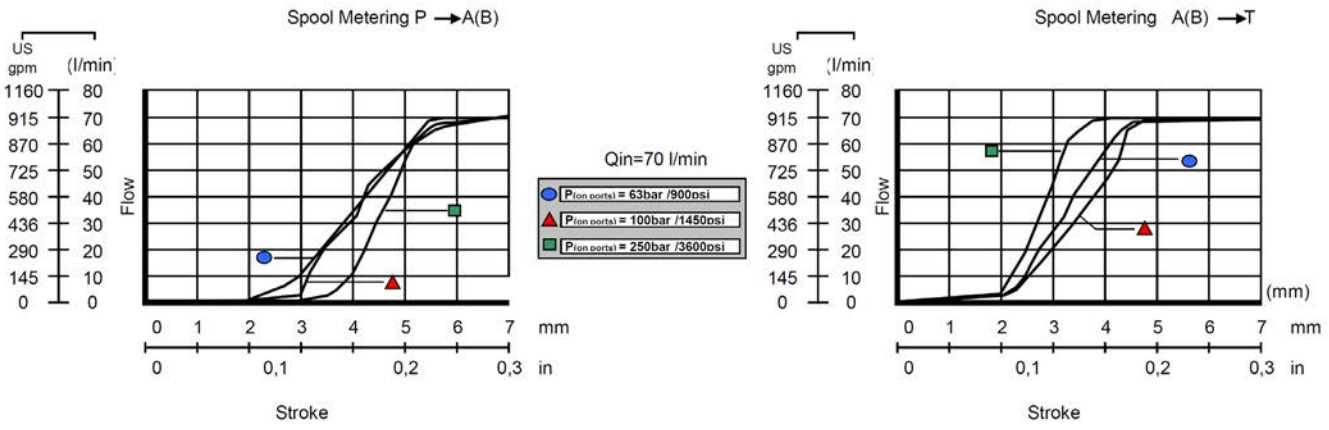

SPOOL OPTIONS

Spool Type - 2A

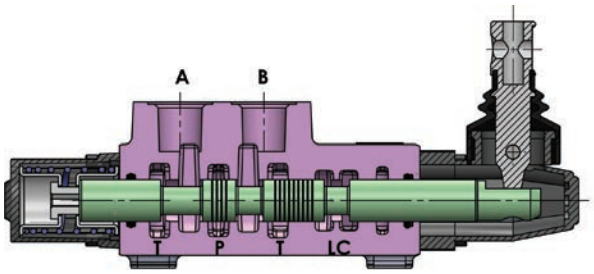

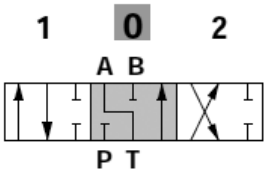

Spool Type - 3A

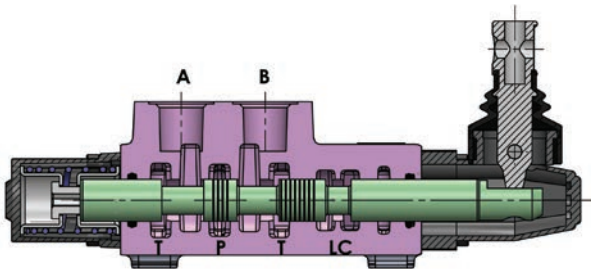

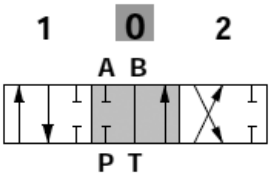

Spool Type - 4A

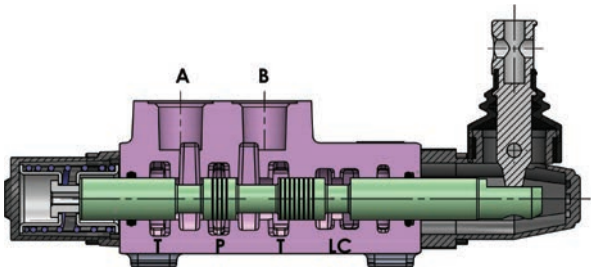

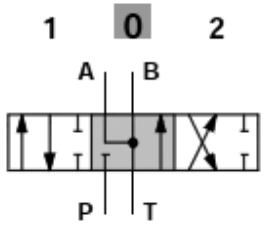

Spool Type - 5A

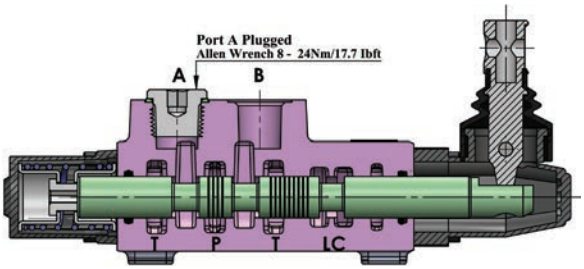

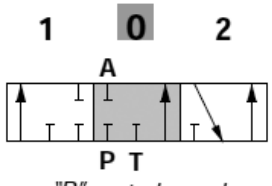

"B" port plugged

Spool Type - 6A

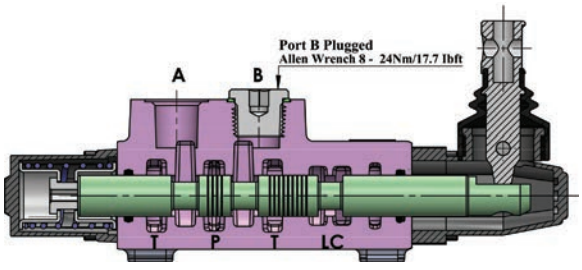

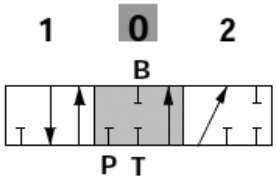

"A" port plugged

SPOOL POSITIONERS – SIDE OF RETURN

With Spring Return in Neutral Position

Kit No: **SR**

Sectional Appearance

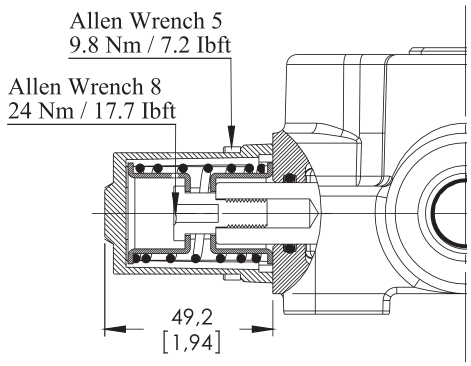

Diagram



With Detent

Kit No: **D**

Sectional Appearance

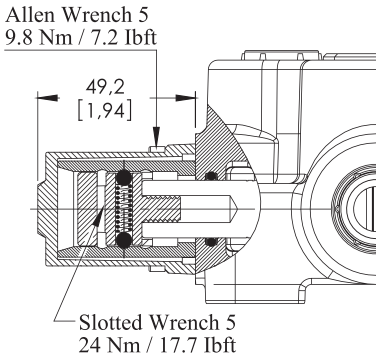

Diagram

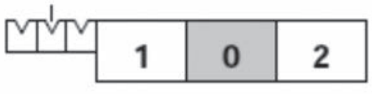

Force - stroke diagram

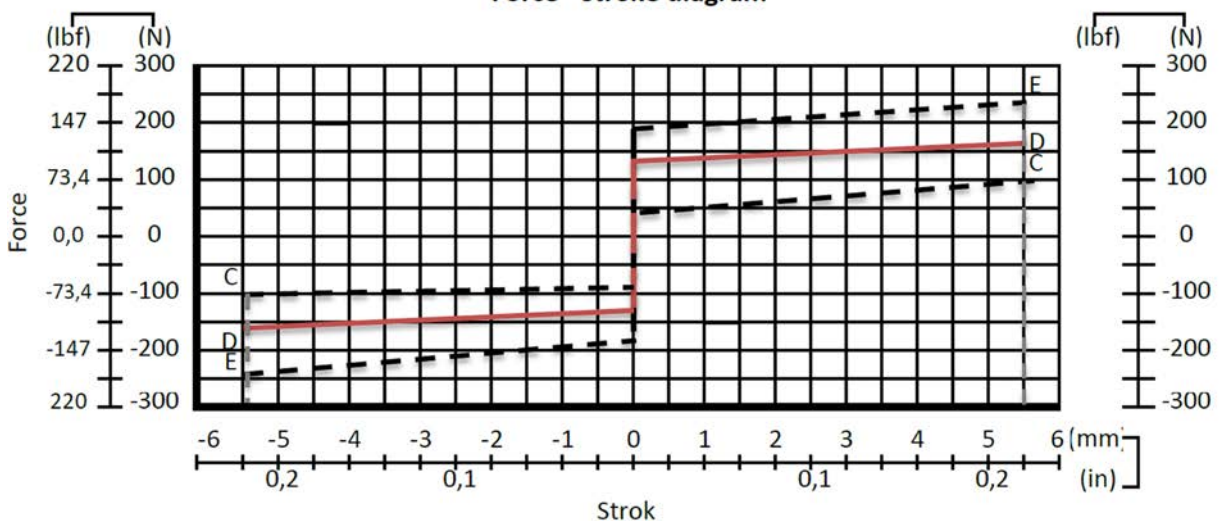

SPOOL POSITIONERS – SIDE OF RETURN

ON/OFF Pneumatic Control

Kit No: **70P**

Sectional Appearance

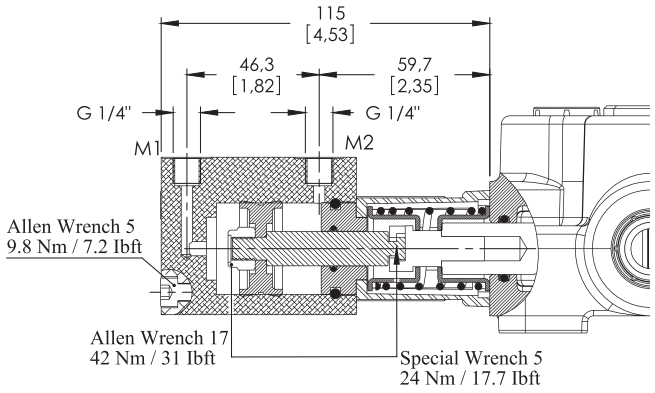

Diagram

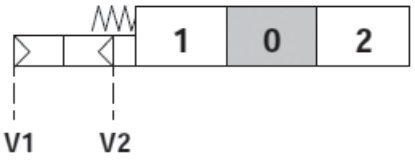

Operating Features
Pilot Pressure .....: 6 Bar (Max. 10) / 87 Psi (Max. 145)

ON/OFF Electro-Pneumatic Control

Kit No: **70EP**

Sectional Appearance

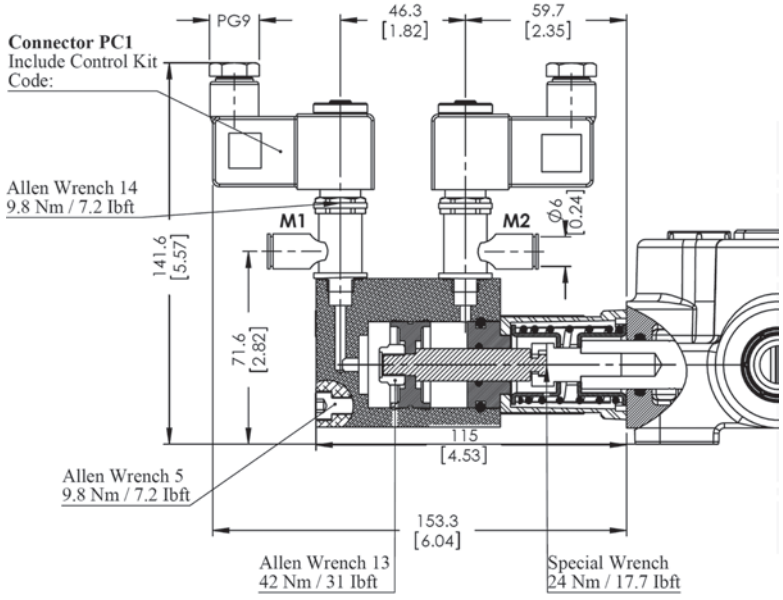

Diagram

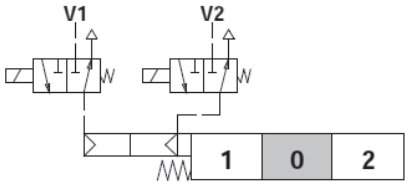

Operating Features
Pilot Pressure .....: 6 Bar (Max. 10) / 87 Psi (Max. 145)
Selenoid Operating Features
Nominal Voltage.....: 12VDC / 24 VDC
Power Rating.....: 6 W

SPOOL POSITIONERS – SIDE OF RETURN

ON/OFF Electro - Hydraulic Control

Kit No: **70EH**

Sectional Appearance

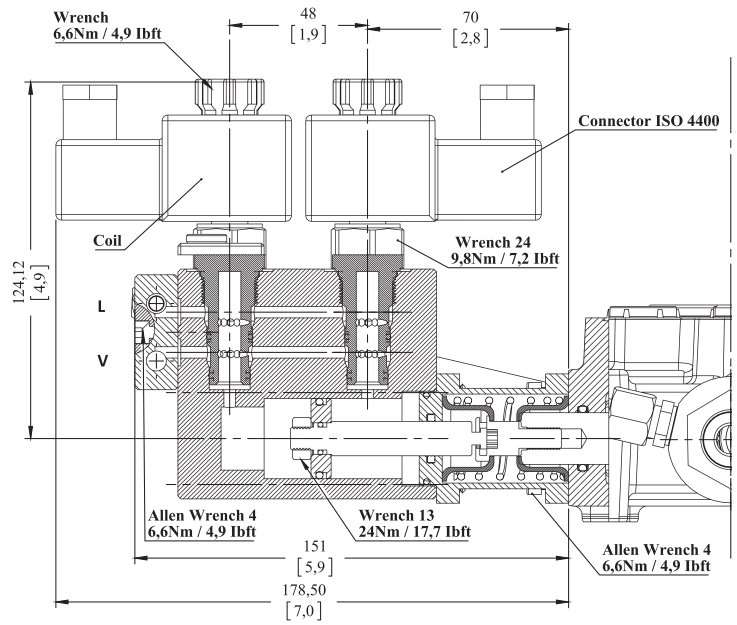

Diagram

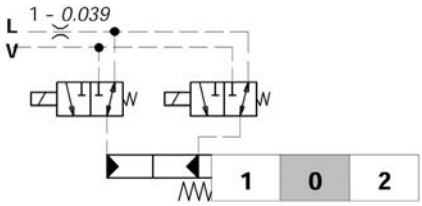

Operating Features

Pilot Pressure .....: 10 Bar / 145 Psi
: 50 Bar / 725 Psi
Max back pressure on drain L....:25 Bar / 360 Psi

Selenoid Operating Features

Coil Connection.....: ISO 4400
Nominal voltage.....: 12 VDC / 24 VDC
Power rating.....: 21 W
Duty cycle.....: %100
Protection type.....: IP 65
Nominal voltage tolerance.....: ±10
Max temperatures.....: 100 C°
Stroke.....: ±5,5 mm

ORDER CODE

External Pilot Collector	Standard Pilot Collector
COL 11 - 10COL1001 – Kit For Section 1	COL 21 - 10COL2001 – Kit For Section 1
COL 12 - 10COL1001 – Kit For Section 2	COL 22 - 10COL2001 – Kit For Section 2
COL 13 - 10COL1001 – Kit For Section 3	COL 23 - 10COL2001 – Kit For Section 3
COL 14 - 10COL1001 – Kit For Section 4	COL 24 - 10COL2001 – Kit For Section 4
COL 15 - 10COL1001 – Kit For Section 5	COL 25 - 10COL2001 – Kit For Section 5
COL 16 - 10COL1001 – Kit For Section 6	COL 26 - 10COL2001 – Kit For Section 6
COL 17 - 10COL1001 – Kit For Section 7	COL 27 - 10COL2001 – Kit For Section 7
COL 18 - 10COL1001 – Kit For Section 8	COL 28 - 10COL2001 – Kit For Section 8

SPOOL POSITIONERS – SIDE OF RETURN

ON/OFF Electro - Hydraulic Control Connections

Connection Type 1: **Collector kit for external pilot and drain**

Sectional Appearance

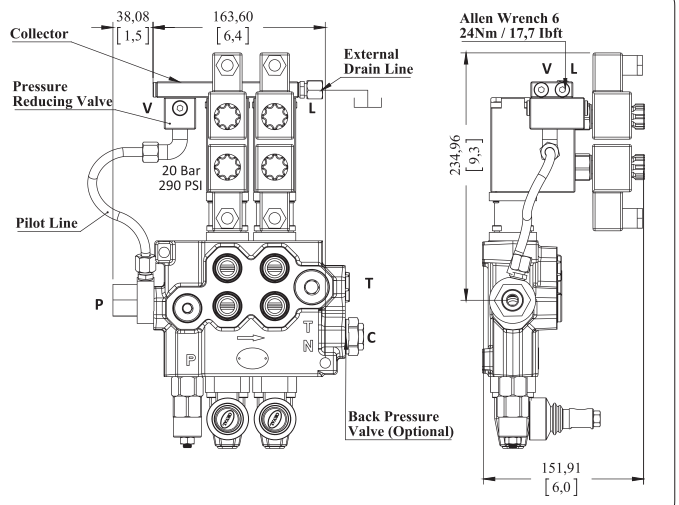

Diagram

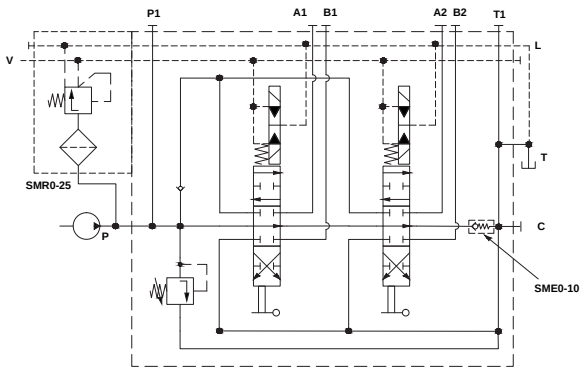

Operating Features

External Pressure Reducing Valve .....: 20 Bar / 290 Psi (For V line)

Code= ORV M70-2P (SD(LA)-SMR2-125-PP)/P-1A-STL-70EH/ P-1A-STL-70EH (SMR0 -COL12-12V)/ SO-PT1 / SGT

Connection Type 2: **Collector kit with pilot and drain lines**

Sectional Appearance

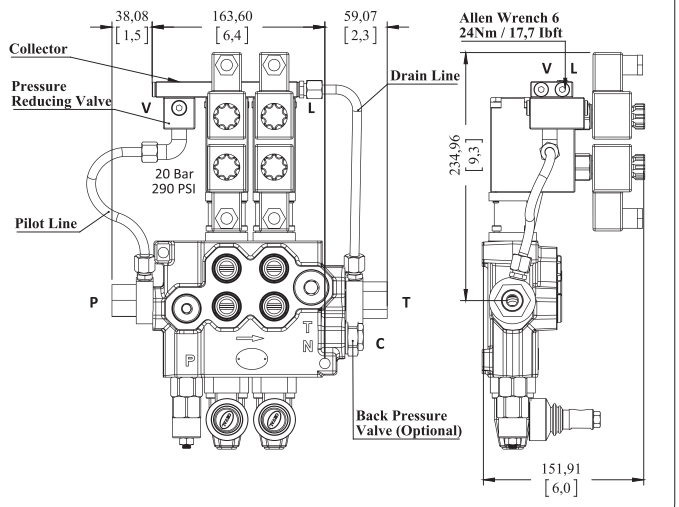

Diagram

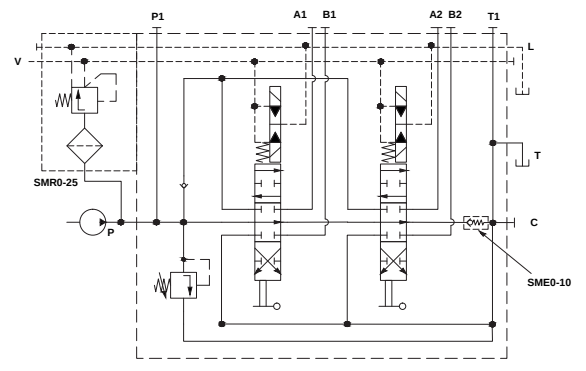

SMR 0-25 Valve Operating Features (Pressure reducing valve)

Outlet Pressure .....: 20 Bar / 290 Psi

Max. Flow.....: 8 l/min

Filtering .....: 80 µ

Code = ORV M70-2P (SD(LA)-SMR2-125-PP)/P-1A-STL-70EH/ P-1A-STL-70EH (SMR0 –COL22-12V)/ SO-PT1 / SGT

SPOOL POSITIONERS – SIDE OF LEVER CONTROL

Lever Controls

Kit No: **STL - L0**

Sectional Appearance

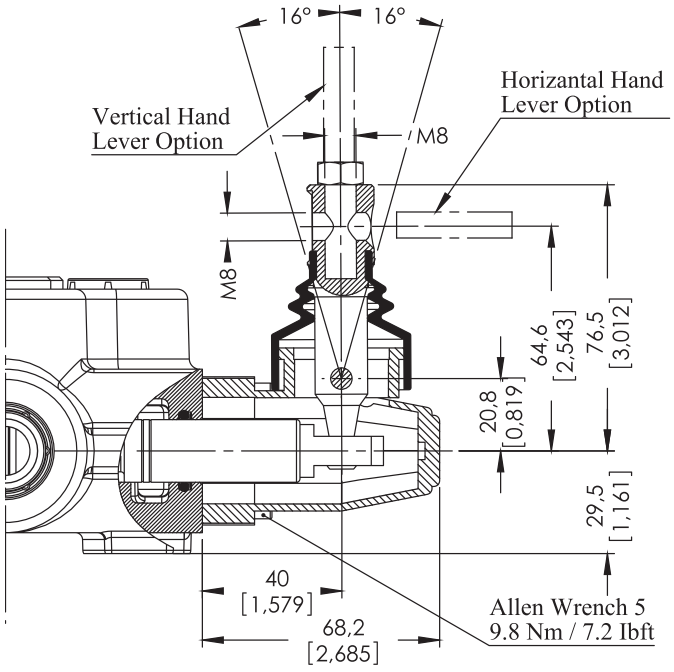

Diagram

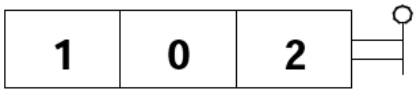

Kit No: **STL - L180**

Sectional Appearance

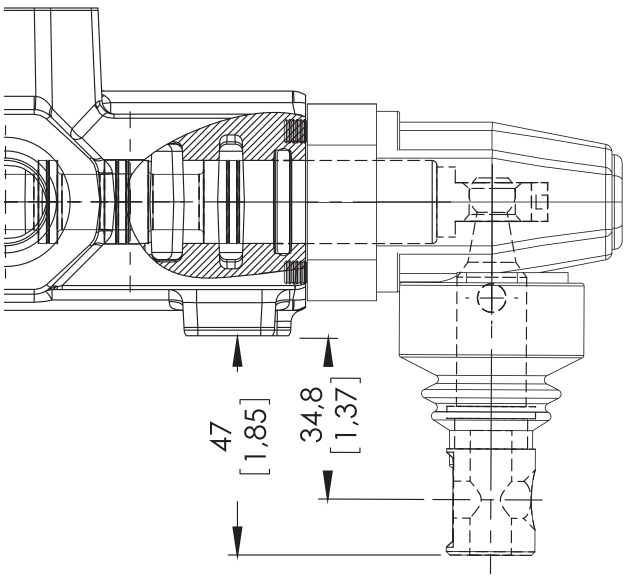

Diagram

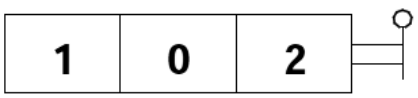

Note: Aluminium protected arm lever pivot box can be rotated 180º.

SPOOL POSITIONERS – SIDE OF LEVER CONTROL

Lever Controls - Joystick

Kit No: **JL**

Exploded View | Diagram

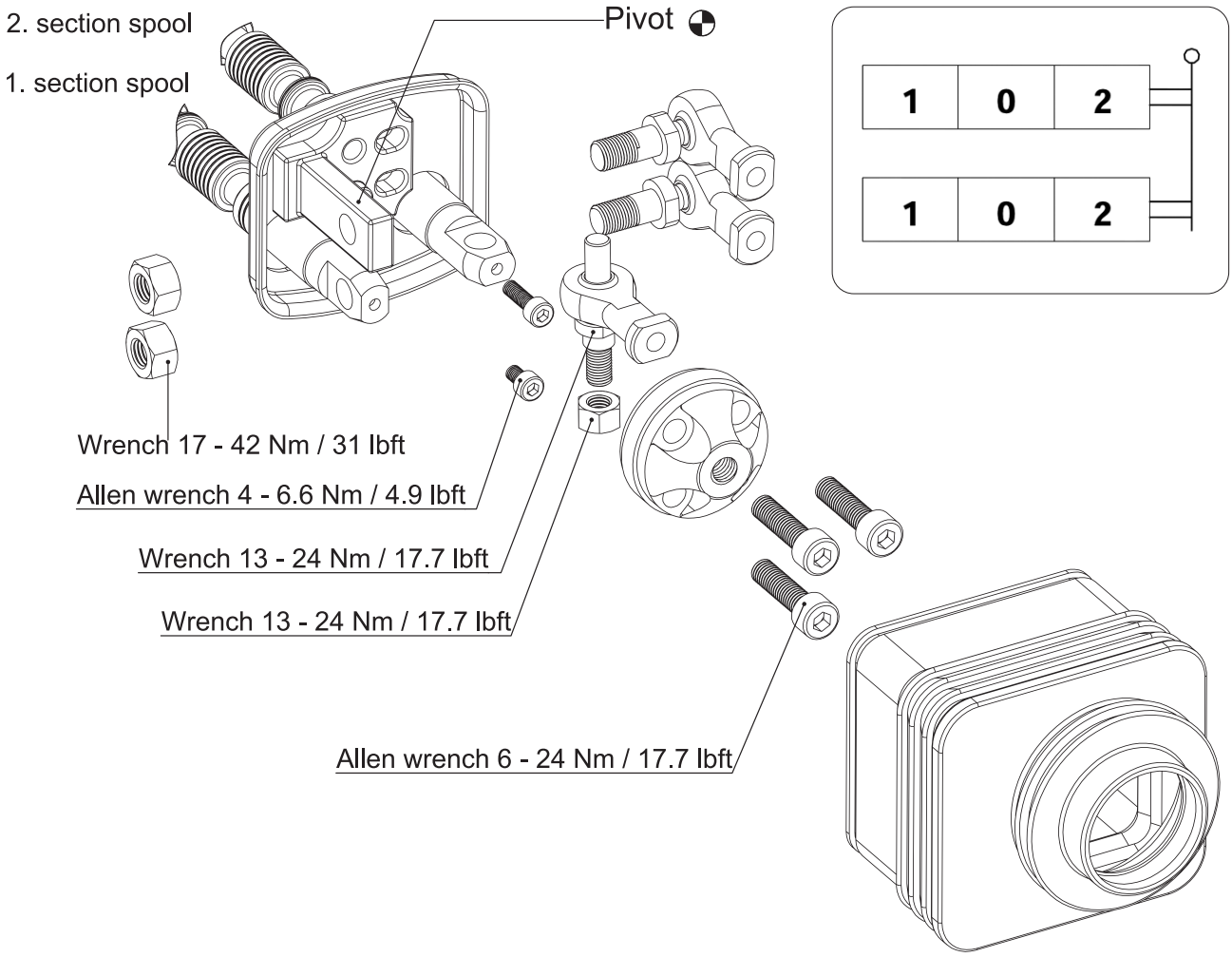

Operation Angle:

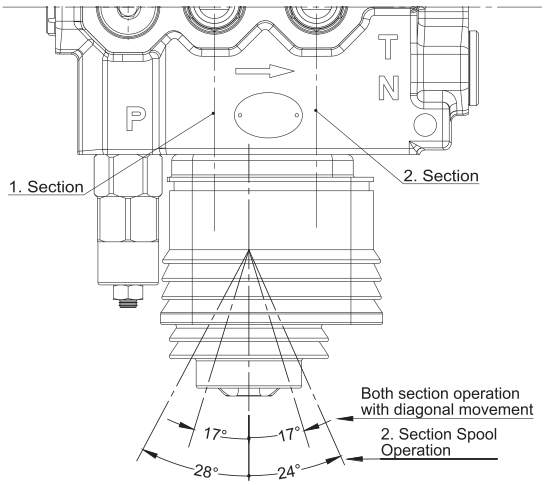

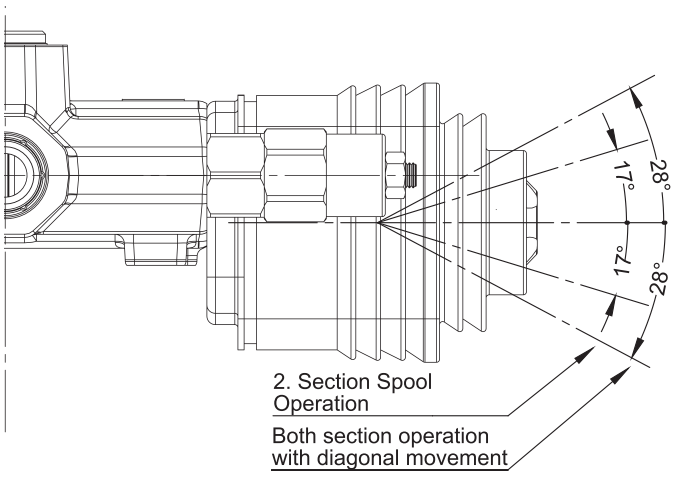

SPOOL POSITIONERS – SIDE OF LEVER CONTROL

Lever Controls - Joystick

Dimensions and movement sceme

Type No: **JL1** — **Application:** Pivot placed down on the Left

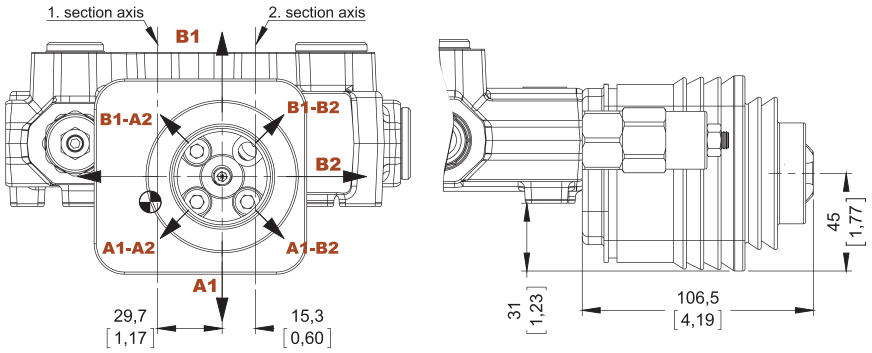

Type No: **JL2** — **Application:** Pivot placed down on the right

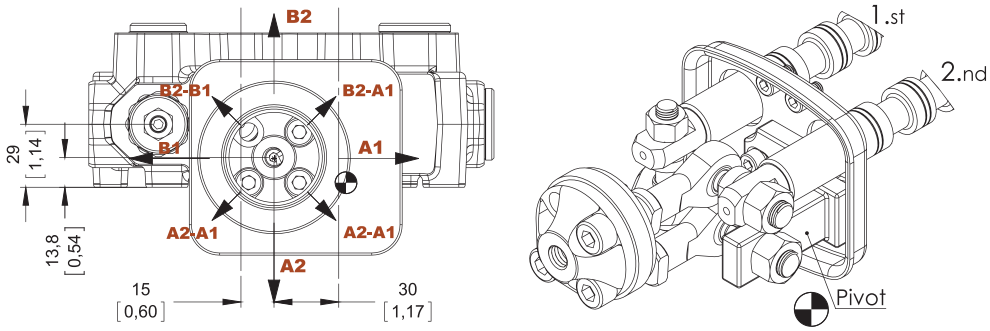

Type No: **JL3** — **Application:** Pivot placed above on the Left

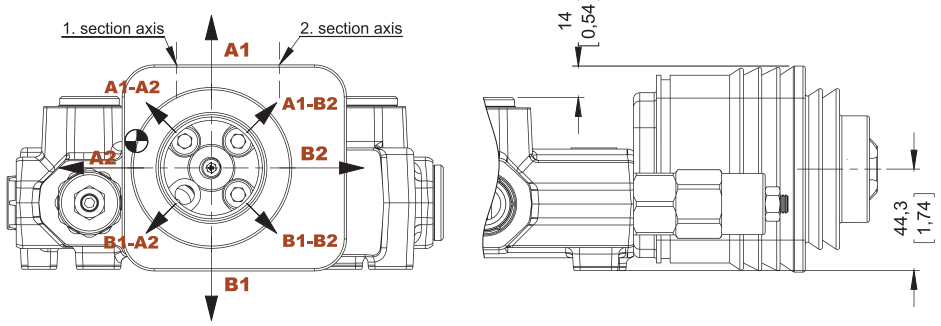

Type No: **JL4** — **Application:** Pivot placed above on the right

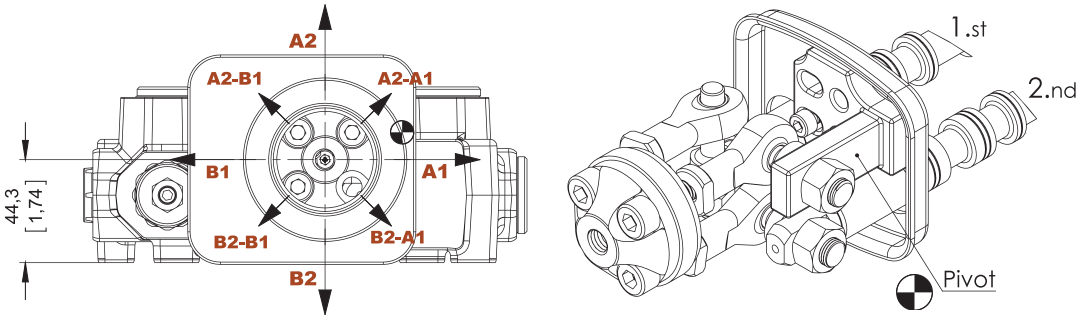

SPOOL POSITIONERS – SIDE OF LEVER CONTROL

Lever Controls - Cable Control

Kit No: **HL**

Exploded View | Diagram

Waterproof cap prearranged for remote control with flexible cable.

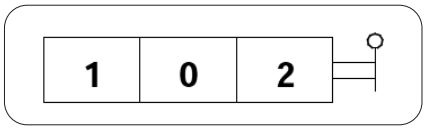

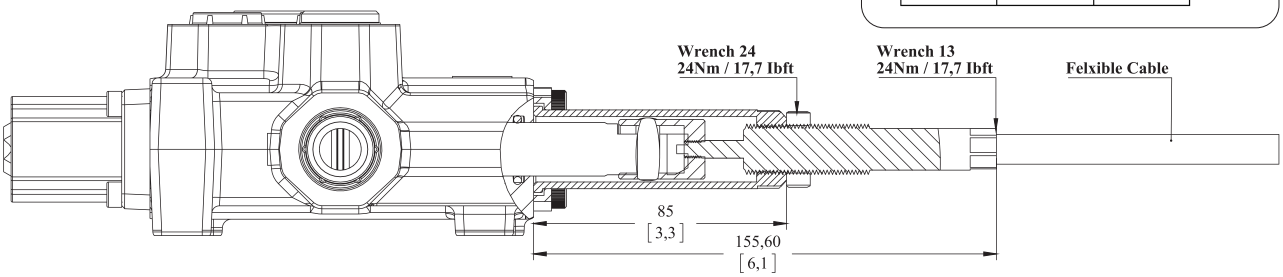

Note: Remote cable control is several options. Please indicte the cable length demanded and contact our sales department.

Example Operation

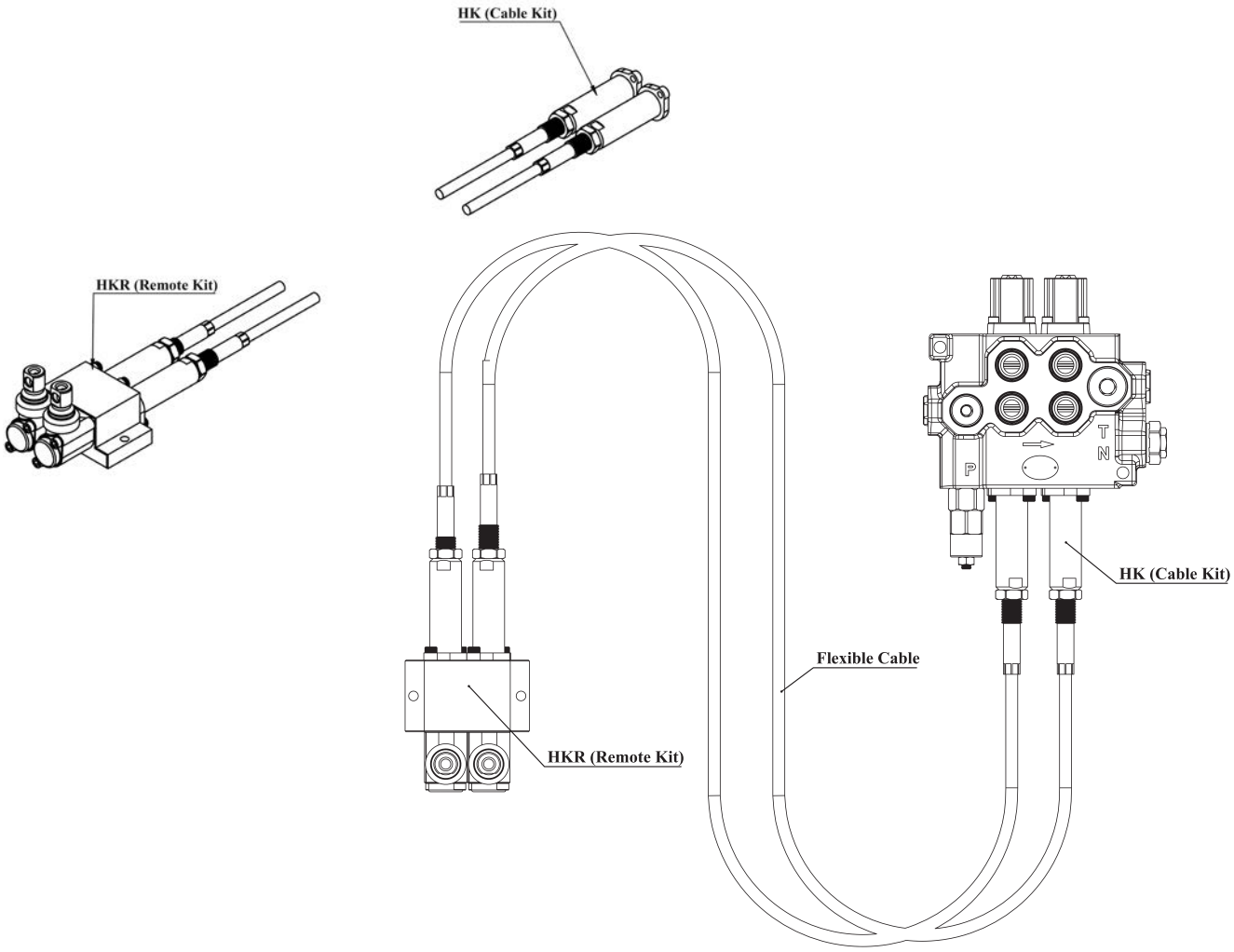

COMPLETE CONTROL – ON / OFF SOLENOID CONTROL

ON/OFF Solenoid Control

Kit No: **SEC**

Sectional Appearance

Electric wiring example

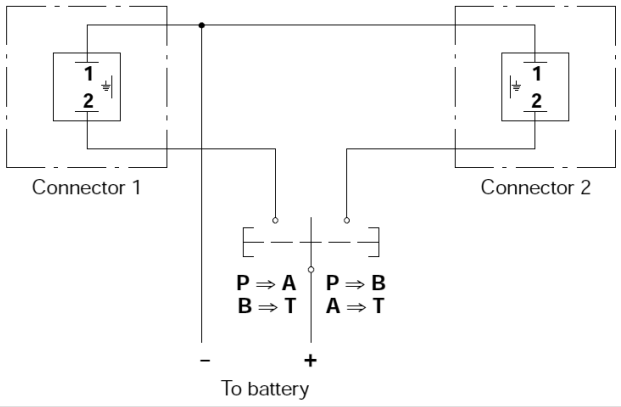

Diagram

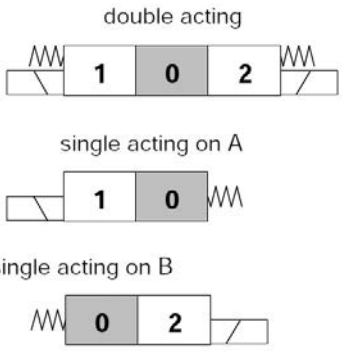

Operating Features

Max Working Pressure.....: 230 Bar / 3300 Psi
Max back pressure .....: 5 Bar / 80 Psi
Internal Lekage.....: 10 cm3 / min

Selenoid Operating Features

Nominal voltage.....: 12 VDC / 24 VDC
Power rating.....: 36 W
Duty cycle.....: %100
Nominal voltage tolerance.....: ±10
Coil insulation .....: Class H
Stroke.....: ±3

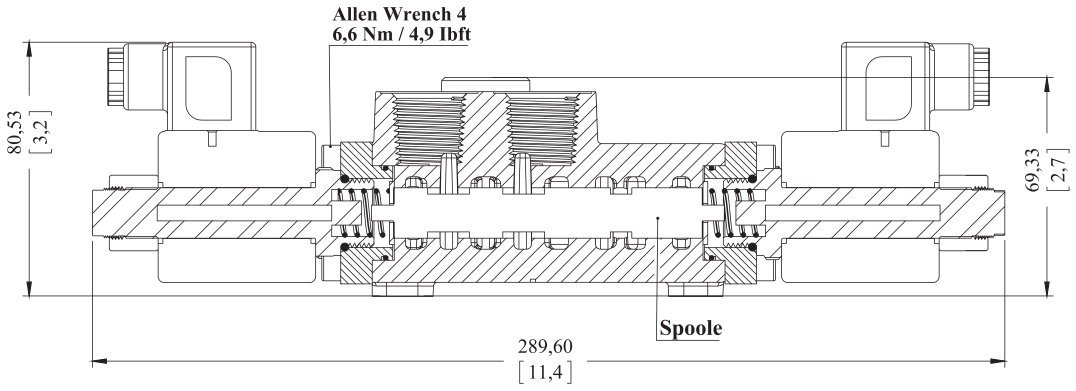

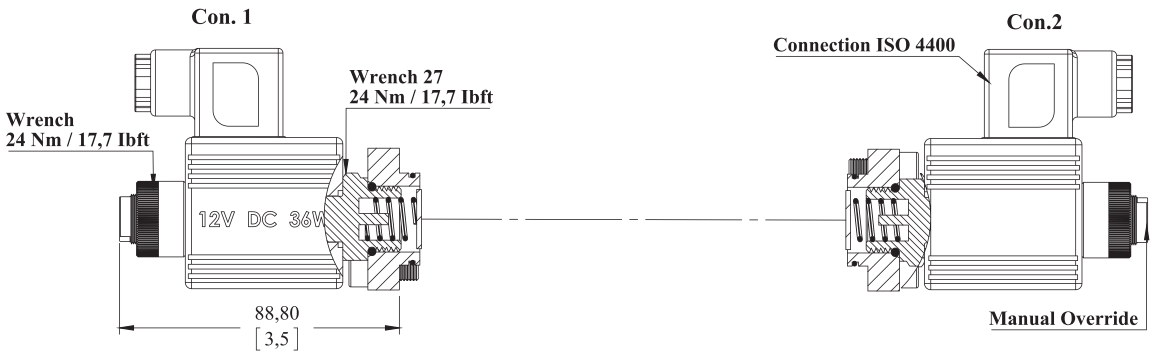

OUTLET PORT OPTIONS

Carry - Over Connection

Kit No: **CO**

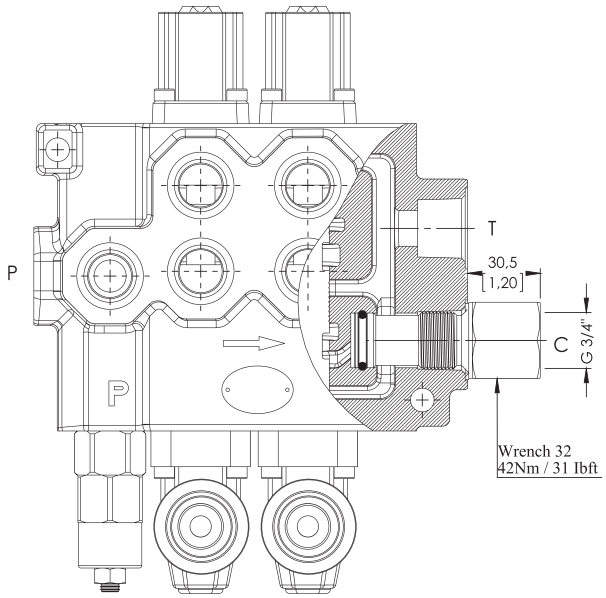

Sectional Appearance

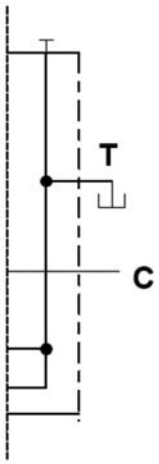

Hydraulic Circuit

Code: ORV M70-2P / SMR2-120 / 1A-SR-STL/1A-SR-STL/CO-PA1/SGT

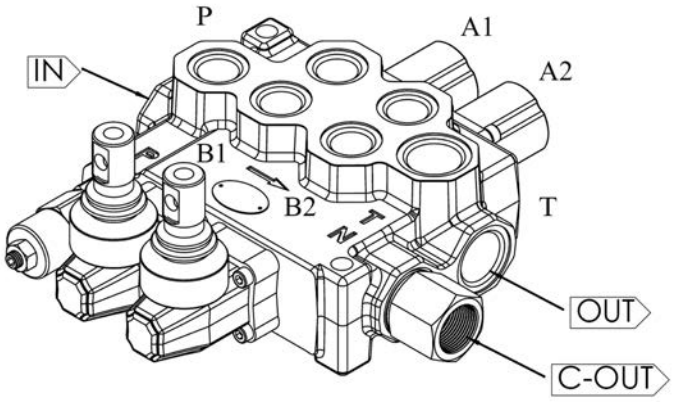

Direction of Port Connectted

SGT : See page 5 for Standard center

OUTLET PORT OPTIONS

Closed Center

Kit No: **CS**

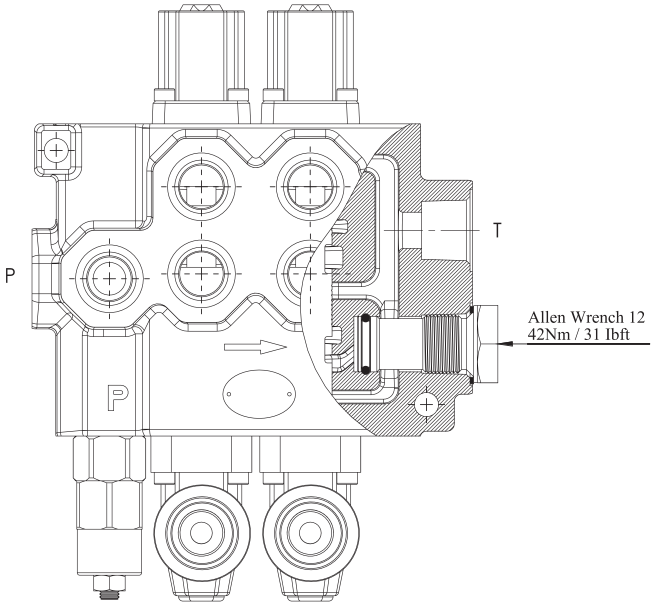

Sectional Appearance

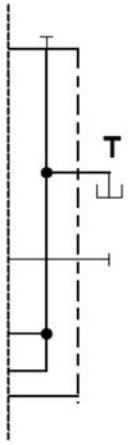

Hydraulic Circuit

Code: ORV M70-2P / SMR2-120 / 1A-SR-STL/1A-SR-STL/CT-PA1/SGT

INSTALLATION AND MAINTENANCE

The ORV M70 valve is assembled and tested as per the technical specification of this catalog. Before the final installation on your equipment, follow the below recommendation:

• The valve can be assembled in any position, in order to prevent body deformation and spool sticking mount the product on a flat surface;

• In order to prevent the possibility of water entering the lever box and spool control kit, do not use high pressure wash down directly on the valve;

• Before painting, ensure plastic port plugs are tightly in place.

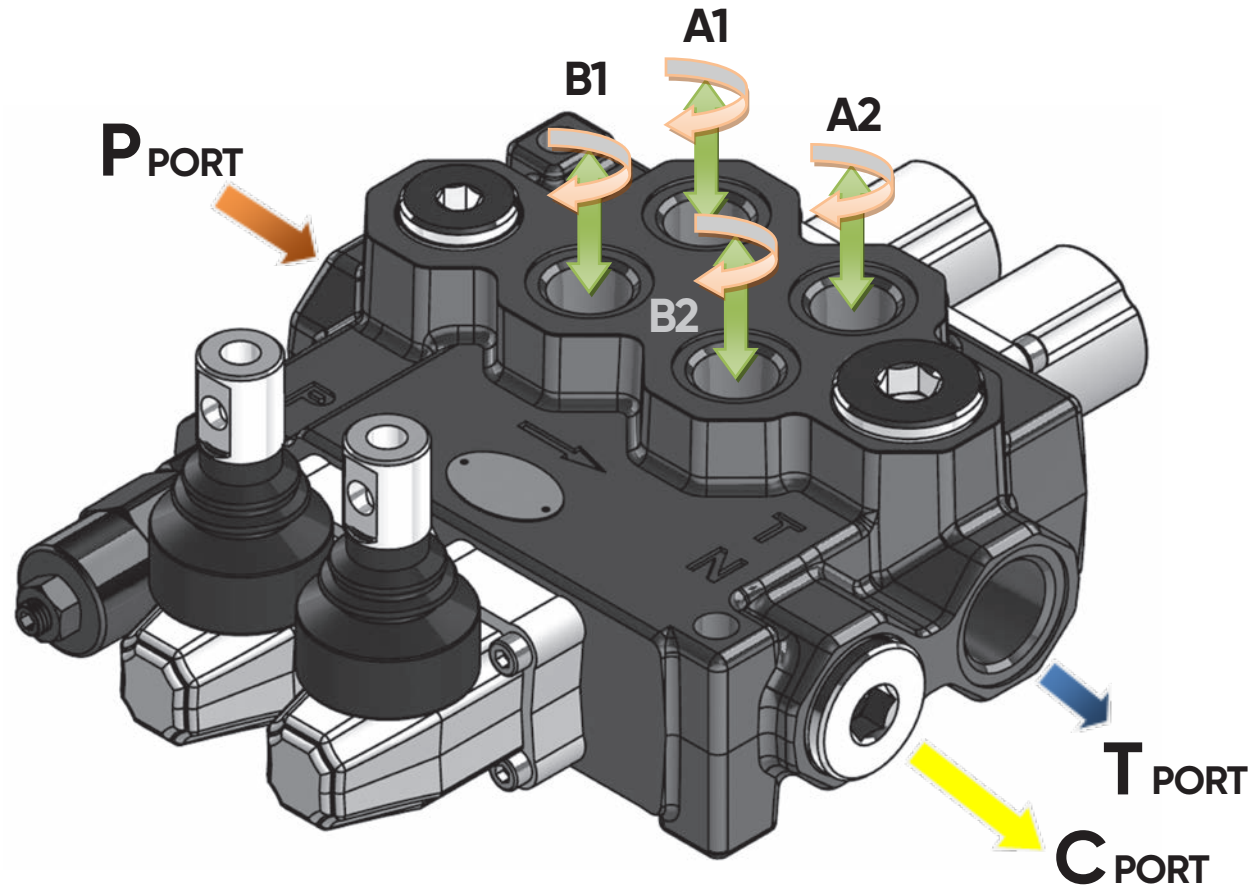

Threads Type (Nm / lbft)	P Port	A and B Port	T and C Port
BSP (ISO 228/1)	G 1/2	G 1/2	G 3/4
With O--Ring seal	50 / 36.9	50 / 36.9	70 / 51.6
With copper washer	60 / 44.3	60 / 44.3	70 / 51.6
With steel and rubber washer	60 / 44.3	60 / 44.3	70 / 51.6
BSP (ISO 228/1)	G 3/4	G 3/4	G 3/4
With O--Ring seal	70 / 51.6	70 / 51.6	70 / 51.6
With copper washer	70 / 51.6	70 / 51.6	70 / 51.6
With steel and rubber washer	70 / 51.6	70 / 51.6	70 / 51.6
UN--UNF (ISO 11926--1)	11/16--12 UNF--2B	9/16--18 UNF--2B	11/16--12 UNF--2B
With O--Ring seal	95 / 70	30 / 22.1	95 / 70
METRIC (ISO 262)	M27 x 2	M22 x 1.5	M27 x 2
With O--Ring seal	100 / 73.8	50 / 36.9	100 / 73.8
With copper washer	100 / 73.8	60 / 44.3	100 / 73.8
With steel and rubber washer	100 / 73.8	60 / 44.3	100 / 73.8

TECHNICAL DATA

Ports Dimensional Data

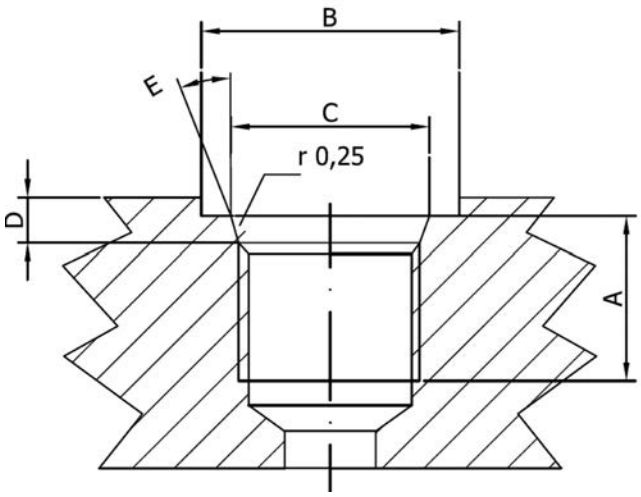

SAE UN-UNF (ISO 725)						
Dimensions		7/8-14 UNF SAE10		1"1/16-12 UN SAE12		1"5/16-12 UN SAE16	
mm	in						
A		17	0,67	20	0,79	20	0,79
B		34	1,34	41	1,61	49	1,92
C		23,9	0,94	29,2	1,15	35,5	1,40
D		2,5	0,10	3,3	0,13	3,3	0,13
E		15°		15°		15°	

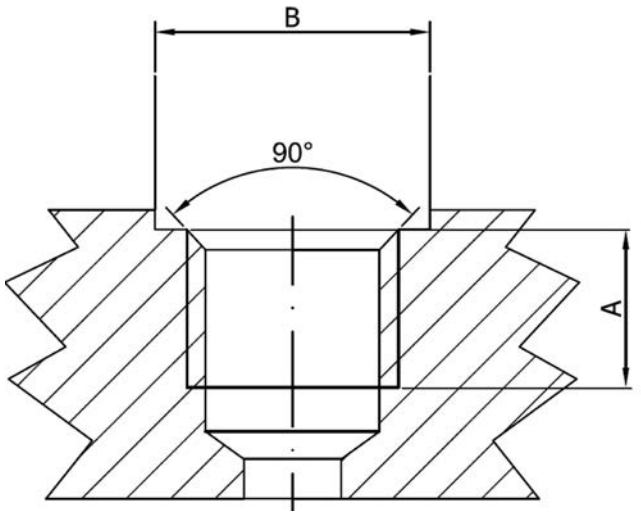

BSP (ISO 228)						
Dimensions		G 1/2"		G 3/4		G1	
mm	in						
A		16	0,63	18	0,71	20	0,79
B		27	1,06	33	1,30	40	1,57

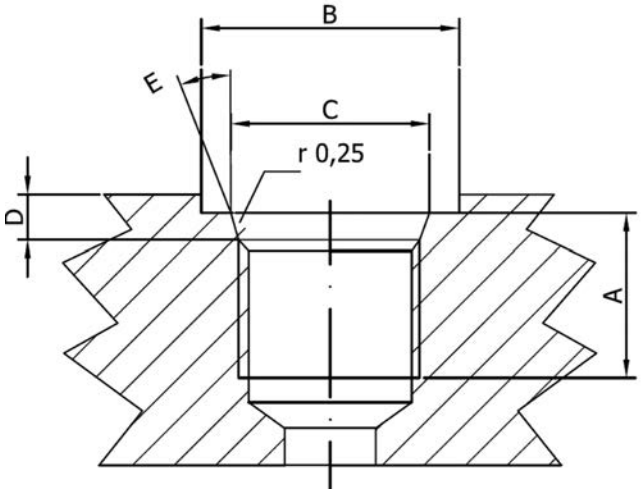

METRIC (ISO 262)					
Dimensions		M22x1,5 ISO 262		M27x2 ISO 262	
mm	in				
A		16	0,63	18	0,71
B		31,5	1,24	37,7	1,48

ORVAL HYDRAULIC

MONOBLOCK DIRECTIONAL CONTROL VALVES

ORV-M80

CE

TÜV International Certification
TÜV THÜRINGEN CERT AZAV 15 190 17185 TIC





CONTENTS

Working Conditions	3
Dimensional Data	3
Hydraulic Circuit	3
Performance Data And Curve	3
Inlet Relief Options	3
Ordering Codes	3
Spool Options	3
Spool Positioners – Side of Return	3
Spool Positioners – Side of Lever Control	3
Spool Positioners – Side of Lever Control	3
Spool Positioners – Side of Lever Control	3
Spool Positioners – Side of Lever Control	3
Outlet Port Options	3
Installation and Maintenance	3
Technical Data	3

Additional Informations

Note: This catalog shows the product in the most standard configurations. For Other Configurations, more detailed information or special request, Please contact Customer Service Dpt.

Warning!: All specifications of this catalog refer to the standard product at this date (01/2020). ORVAL, oriented to a continuous improvement, reserves the right to discontinue, modify or revise the specifications, without notice.

ORVAL IS NOT RESPONSIBLE FOR ANY DAMAGE CAUSED BY AN INCORRECT USE OF THE PRODUCT.

WORKING CONDITIONS

Nominal Flow Rating / Displacement	80 l/min	21 U.S.G.P.M
Maximum Working Pressure (Series Circuit)	315 Bar	4600 PSI
Max. Back Pressure	25 Bar	360 PSI
Oil Temperature with NBR Seals	-20 to 80 C°	-4 to 176 F °
with FPM (Viton) Seals	-20 to 100 C°	-4 to 212 F °
Oil Viscosity – Operating Range	From 10 to 75 mm2/s	From 10 to 75 cSt
Minumum / Maximum	10 / 400 mm2/s	10 / 400 cSt
Oil Filtration	≤30 µ	
Ambiant Temperature Range	-35 to 60 C°	-31 to 140 F °
Number Of Spools	1 to 6	
Internal Leakage (at 100 bar (1450 PSI), 40C° (110 F°), 46 cSt – A(B)–T)	3 cm3/min	0,18 in3/min
Max. Level Of Contamination	19/16 - ISO 4406	

Not: This catalogue shows technical specifications measured with mineral oil of 46 mm2/s-46 cSt viscosity at 40 C° temparture.

Features

• Simple, compact and heavy duty designed monoblock valves from 1 to 6 sections for open and closed center hydraulic systems.
• Fitted with a main pressure relief valve.
• Optionaly Carry-Over port only tandem circuit.
• Interchangeable spool diametre is 18 mm – 0,71 in.
• Available manual, pneumatic, hydraulic and electro-pneumatic spool control kits.

DIMENSIONAL DATA

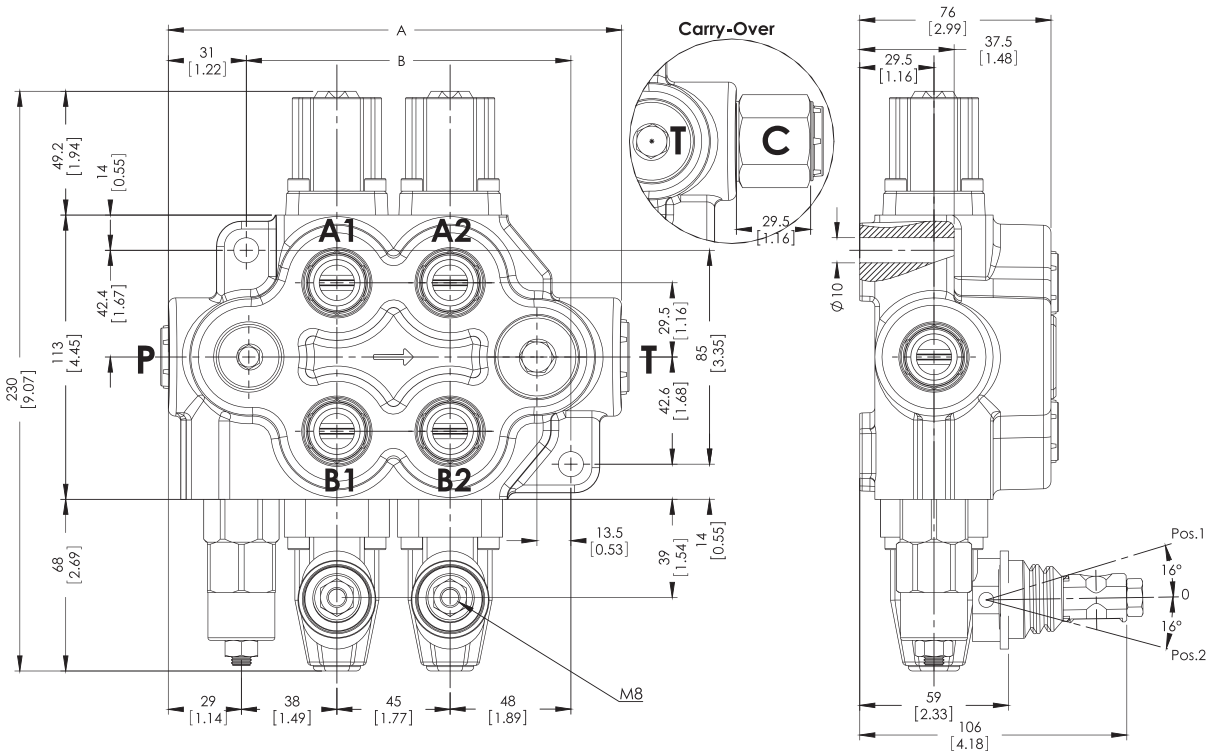

TYPE	A		B		Weight	
	mm	in	mm	in	Kg	lb
ORV-M80-1P	130	5,12	84	3,31	4,92	10,56
ORV-M80-2P	175	6,89	129	5,08	7,32	15,96
ORV-M80-3P	220	8,66	174	6,85	9,72	21,36
ORV-M80-4P	265	10,43	219	8,65	12,12	26,76
ORV-M80-5P	310	12,20	264	10,39	14,52	32,17
ORV-M80-6P	355	13,98	309	12,17	16,92	37,57

STANDARD THREADS

PORT	BSP (Iso 228) 1/2" Series	BSP (Iso 228) 3/4"Series	UN-UNF (Iso 11926-1)	Metric (Iso 262)
P Inlet	G 1/2	G 3/4	1 1/16-12 UN	M27x2
A-B Ports	G 1/2	G 3/4	7/8-14 UNF	M22x1.5
T Outlet	G 3/4	G 3/4	1 1/16-12 UN	M27x2
Pneumatic	G 1/4	G 1/4	NPTF 1/8 - 27	NPTF 1/8 - 27
Carry-Over	G 3/4	G 3/4	1 1/16-12 UN	G 3/4

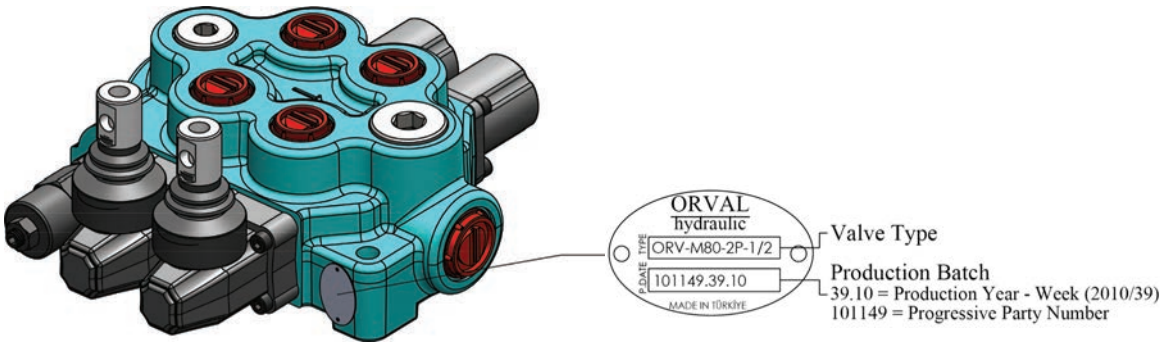

HYDRAULIC CIRCUIT

Standard Configurations With Top Inlet And Outlet Ports - LH

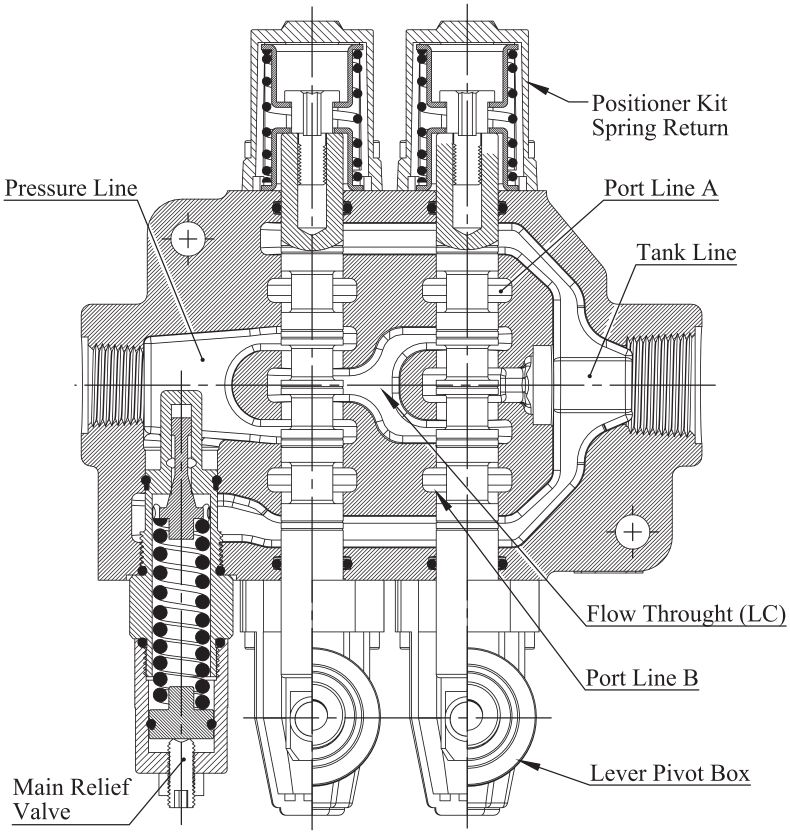

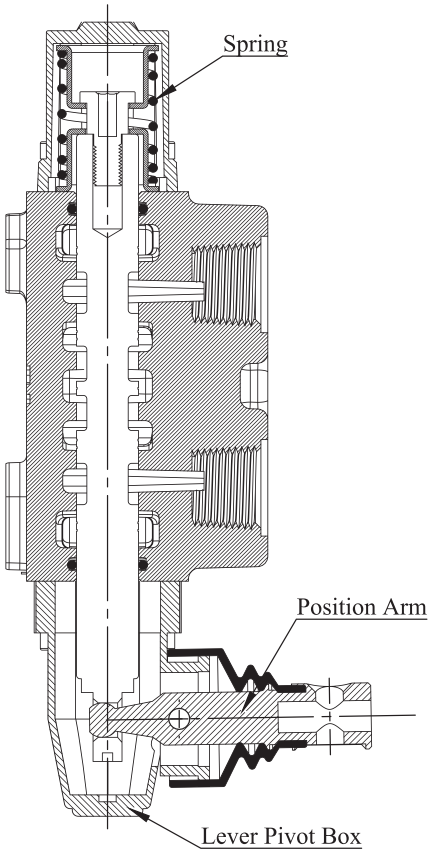

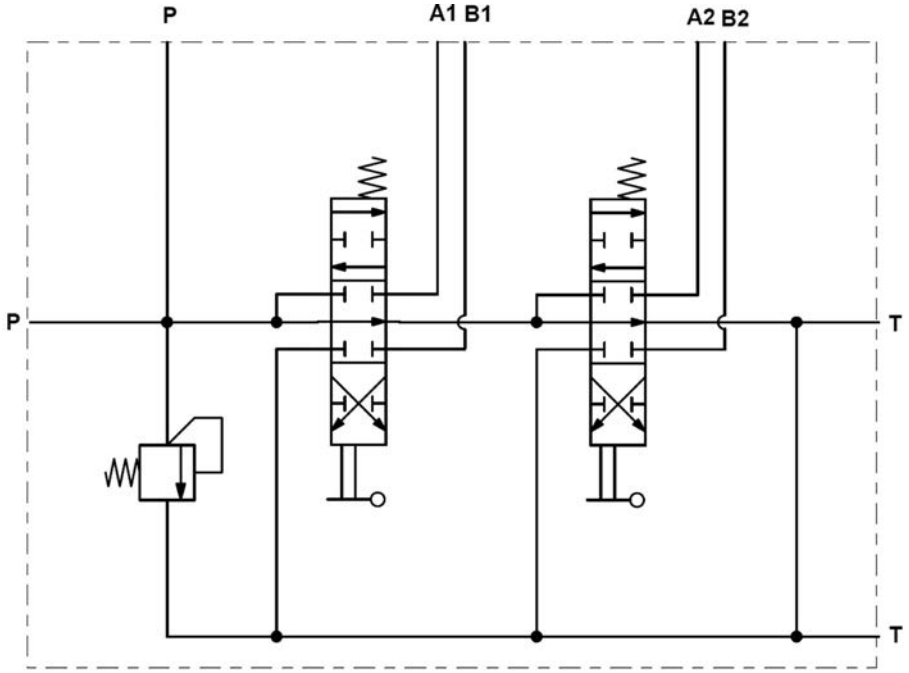

Code: ORV M80-2P / SMR2-120 / 1A-SR-STL/1A-SR-STL/PA1/SGT

Standard Configurations With Top Inlet And Outlet Ports - RH (Right Inlet)

A symetrical body allows the reverse assembly of spool and this with connected control kit (RH Configuration).

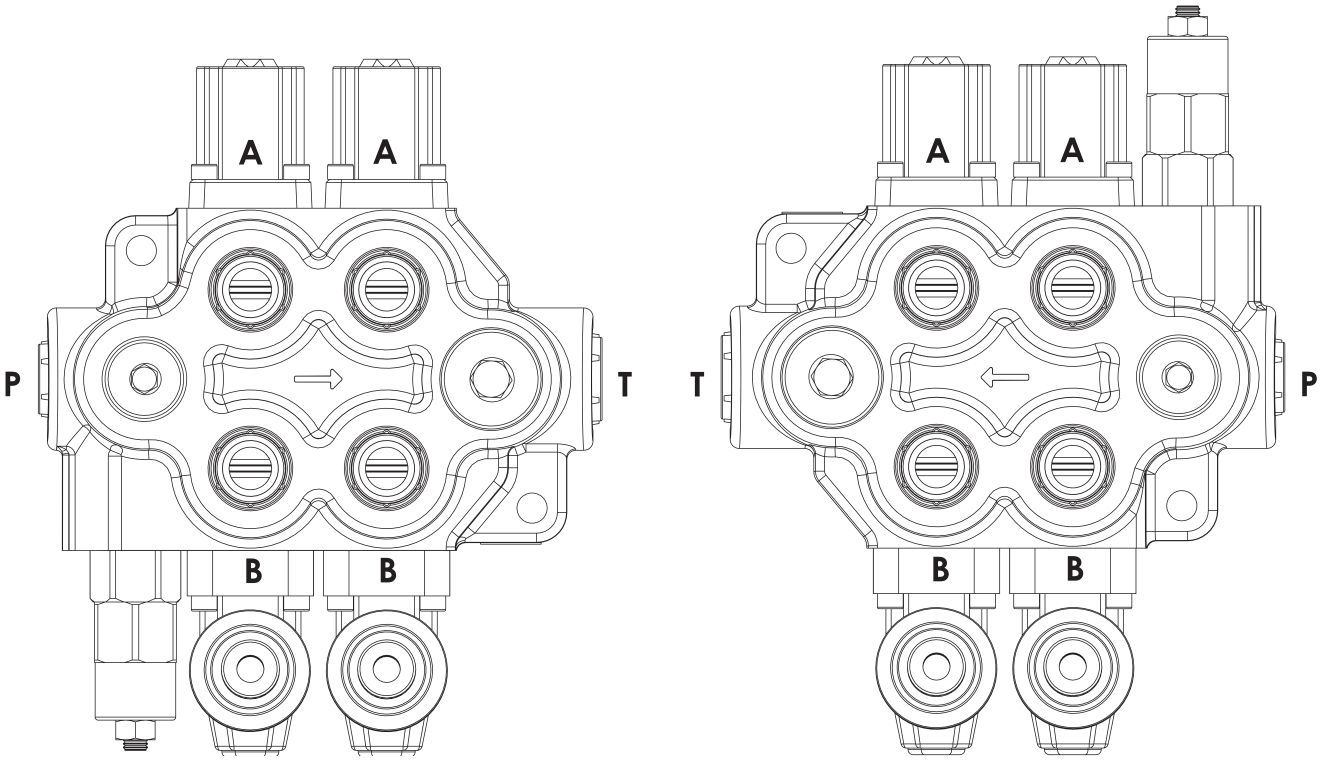

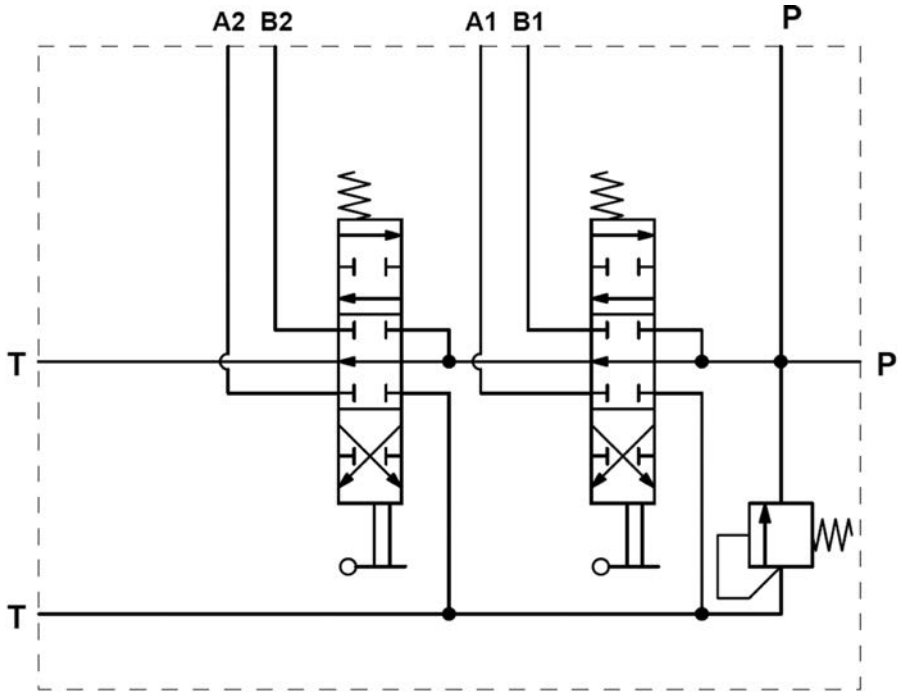

Code: ORV M80-2P / SMR2-120 / (RH) 1A-SR-STL/1A-SR-STL/PA1/SGT

PERFORMANCE DATA AND CURVE

Open Center - Pressure Drop (P-T)

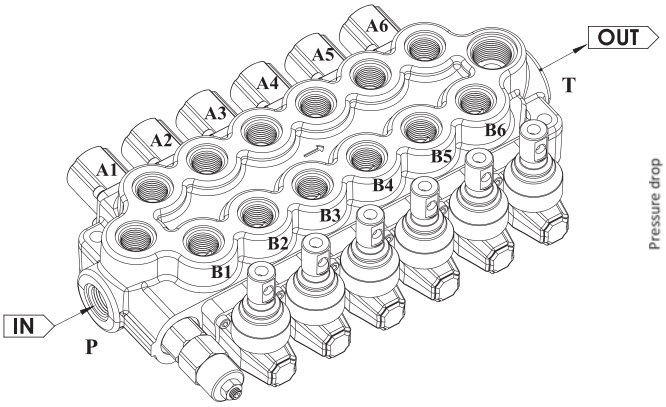

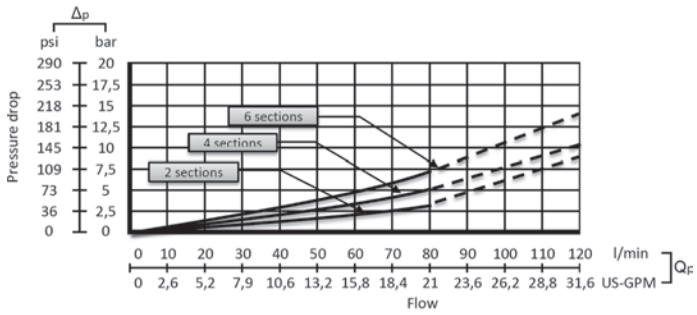

Inlet to Work Port - Pressure Drop (P-A/B)

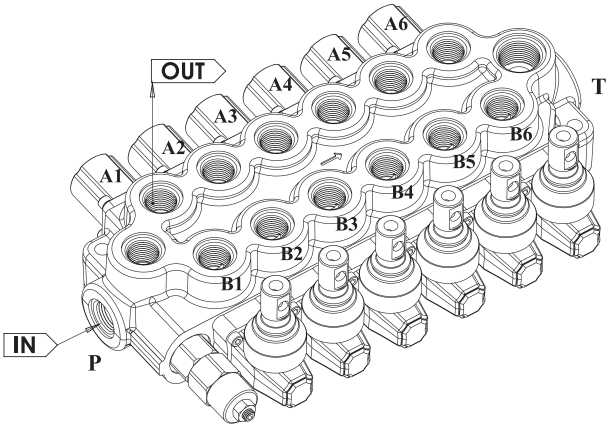

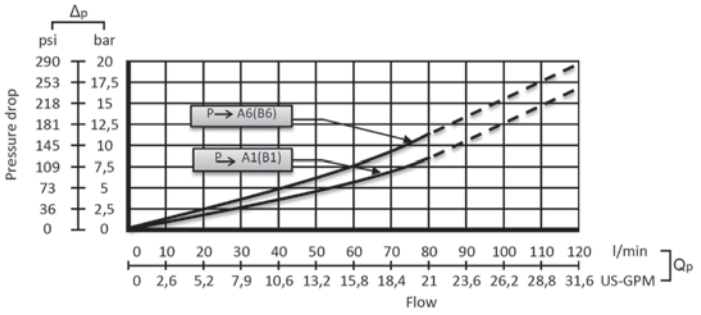

Work Port to Outlet - Pressure Drop (A/B-T)

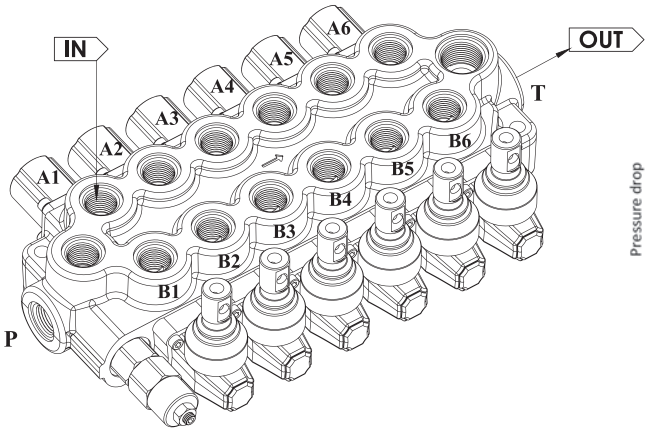

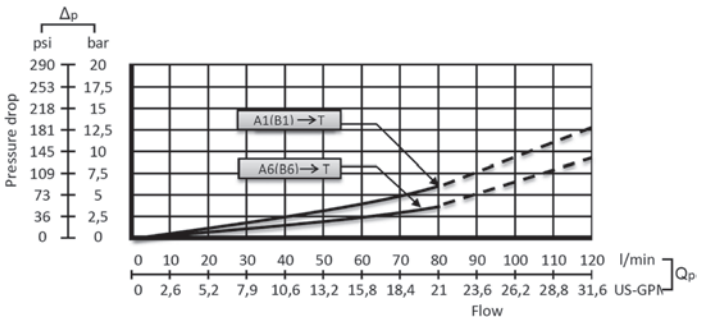

Note: Measured and chart value with spool type 1A.

INLET RELIEF OPTIONS

Direct Pressure Relief Valve

Code:

SMR2 – 120

- Pressure Setting Bar in (Standard 120 bar)
- Standard Main Relief Spring Type -2

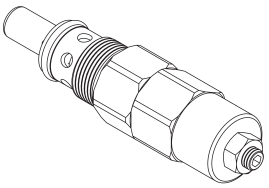



Performance Data

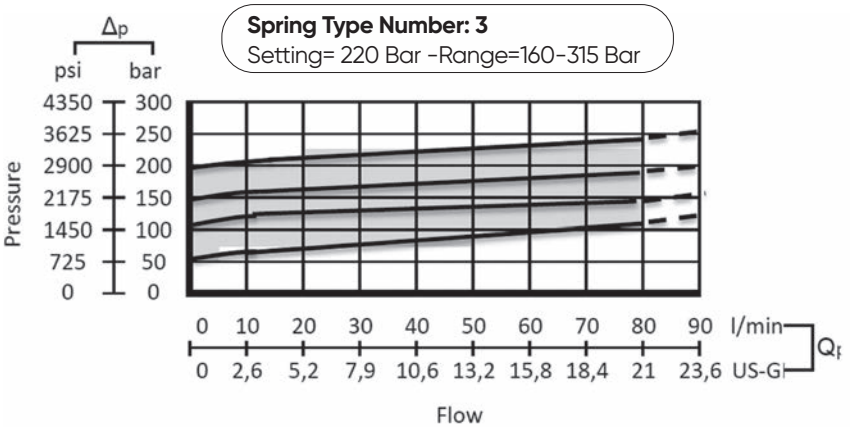

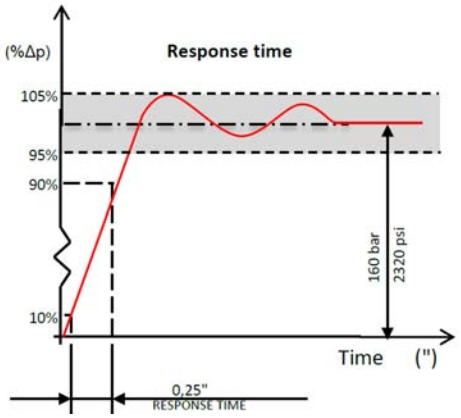

Adjustment Type on Valve

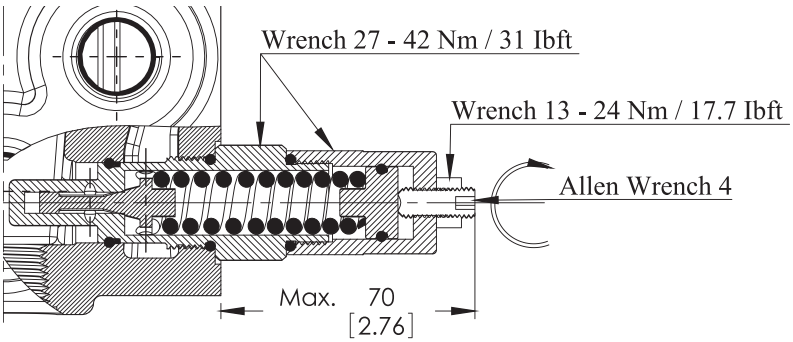

Relief Blanking Plug - WM

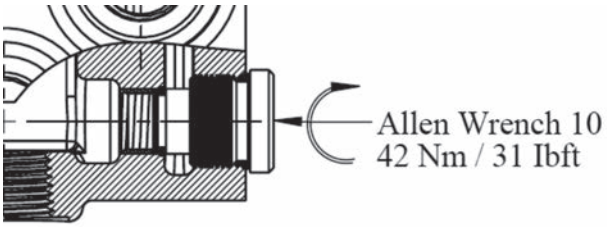

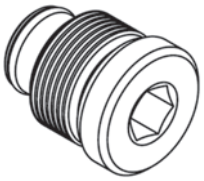



ORDERING CODES

Order Example

ORV M80-2P	/	SMR2-120	/	1A-SR-STL	/	1A-80P-STL	/	CO - PL1 - P1	/	SGT
1		2		3 4 5 (1st Section)		Following Section		6 7 8 (Output Section)		9

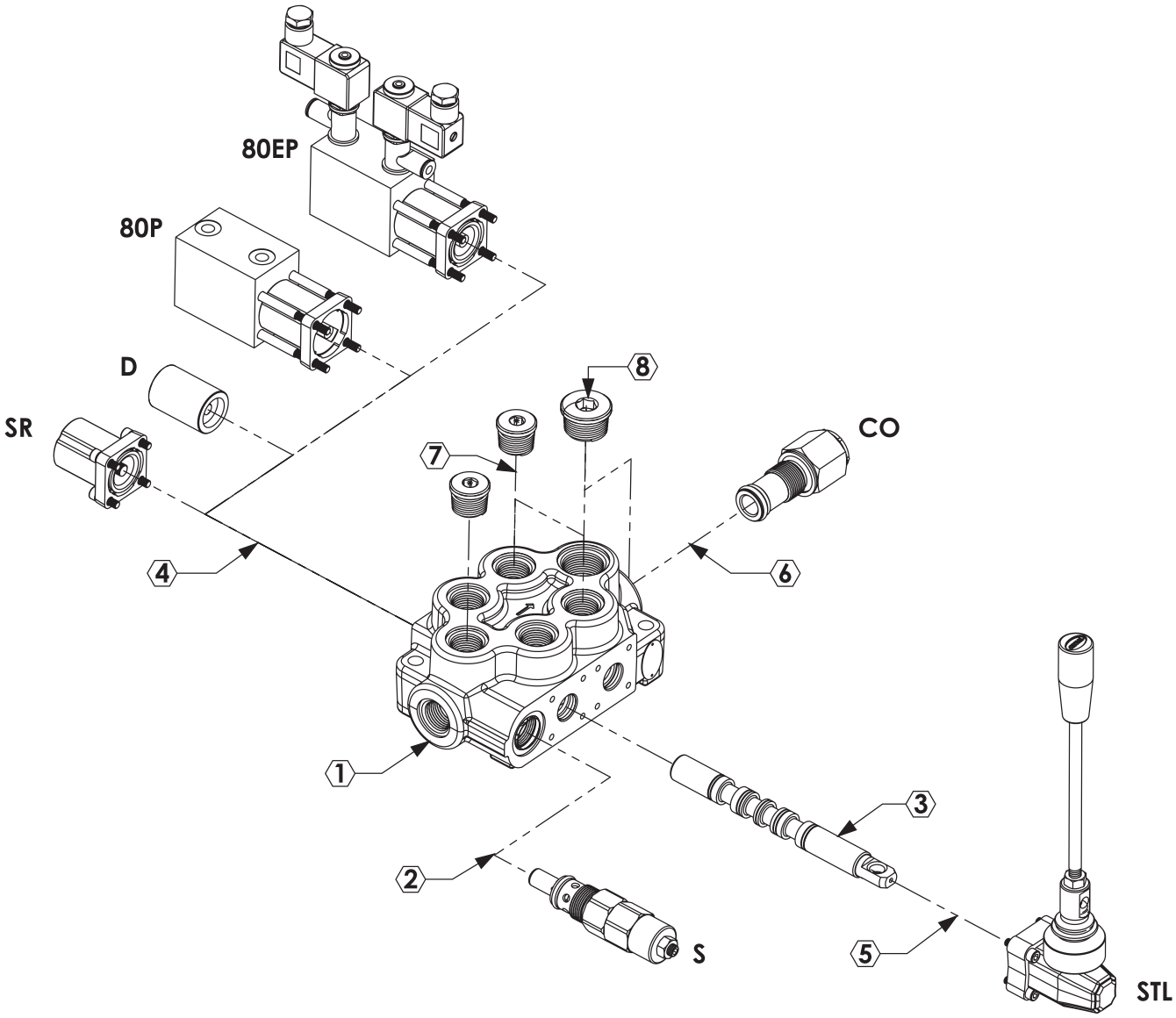

ORDERING CODES

1- Valve Type and Body

M80 =Valve Type - (M) - Monoblok
(80) - Max. Flow Rate
1P = Body for 1 Section - (1BM180100)
2P = Body for 2 Sections - (1BM280100)
3P = Body for 3 Sections - (1BM380100)
4P = Body for 4 Sections - (1BM480100)
5P = Body for 5 Sections - (1BM580100)
6P = Body for 6 Sections - (1BM680100)

2- Pressure Relief Options

SMR = Standard direct pressure relief valve
SMR1-080 – (2SMR180080) – Range 0-80 bar
Setting 80 bar
SMR2-120 – (2SMR280120) – Range 60-200 bar
Setting 120 bar
SMR3-220 – (2SMR380220) – Range 160-315 bar
Setting 220 bar

3- Spool Options

1A - (3SM180110) – 3 Positions, Double acting
2A - (3SM180120) – 3 Positions, Double acting
A to tank B Blocked
3A - (3SM180130) – 3 Positions, Double acting
B to tank A blocked
4A - (3SM180140) – 3 Positions, Double acting
A and B tank
5A - (3SM180150) – 3 Positions, Single acting on
A (A to tank)
6A -(3SM180160) – 3 Positions, Single acting on
B (B to tank)

4- Spool Positioners

SR = Spring Return in neutral position –
(4SR080100)
D = Detent in position 1, neutral and 2 -
(4D080100)
80P = ON/OFF Pneumatic – (445P045100)
80EP = 12 VDC ON/OFF electro-pneumatic –
(480EP080112)

5- Lever Options

STL = Standard Lever – (5STL080100)
JL = Joystick lever for two sections operation
- (5JL 080100)

6- Output Options

PA2(T) = G3/4 Top output plug -(6PL1080134)
PA2(S) = G3/4 Side output plug -(6PL1080134)
CO = G3/4 Carry–Over Connector -(6CO080100)

7- Ports Plug Options "If Required"

PL3(5A) = Plug for single action spool for 5A
G3/4 –(6PL1080134)
PL3(6A) = Plug for single action spool for 6A
G3/4 –(6PL1080134)
PL2(5A) = Plug for single action spool for 5A
G1/2- (6PL1040112)
PL2(6A) = Plug for single action spool for 6A
G1/2- (6PL1040112)
*Page 13 for detail spool options.

8- Ports Input Plug Options

PI1(T) = G1/2 Top input – (6PL1040112)
PI1(S) = G1/2 Side input – (6PL1040112)
PI3(T) = G3/4 Top input - (6PL1080134)
PI3(S) = G3/4 Side input - (6PL1080134)

9- Ports Thread Options

SGT1 =1/2" Series Port Options - (9P045112)
SGT3 =3/4" Series Port Options - (9P080134)
UNF =UNF Series Port Options - (9U045138)
M =Metric Series Port Options - (9M045138)
*Page 4 for detail port information.

HandLever

L = Standard HandLever (L=120mmxM8)-(7L040100)
HL = Remote Cable Kit – (80HL80100)

SPOOL OPTIONS

Spool Type - 1A

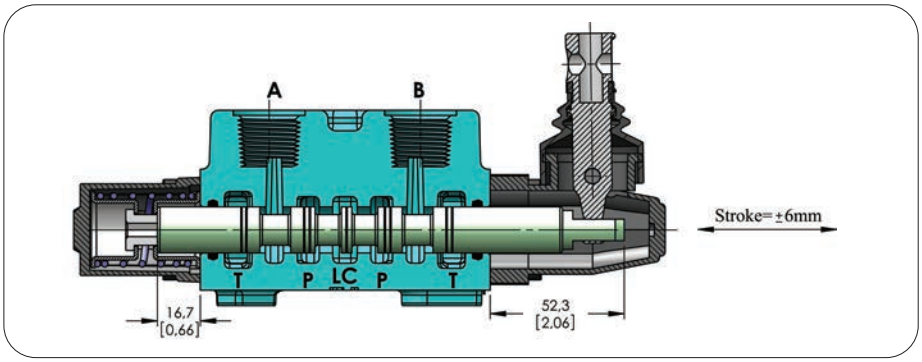

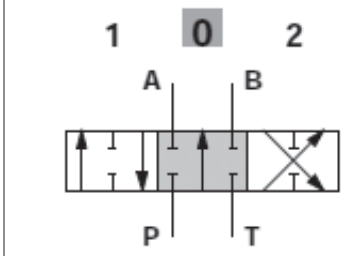

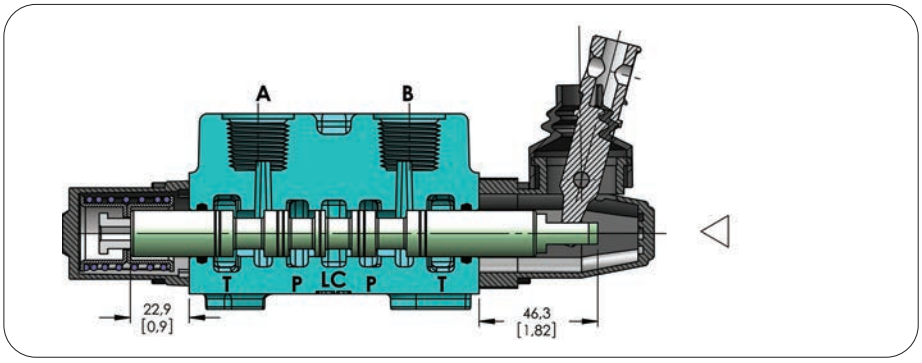

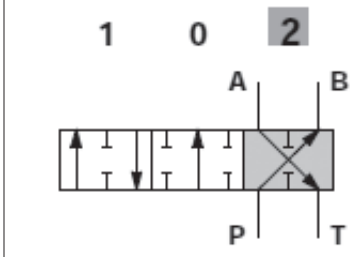

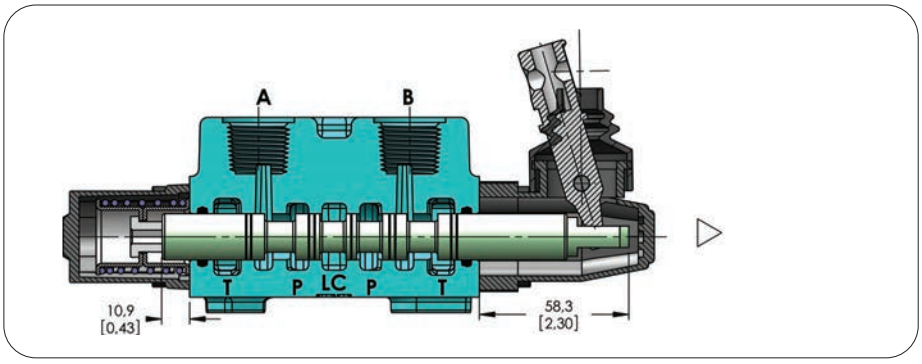

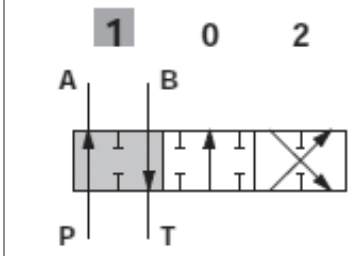

Performance Curve And Data

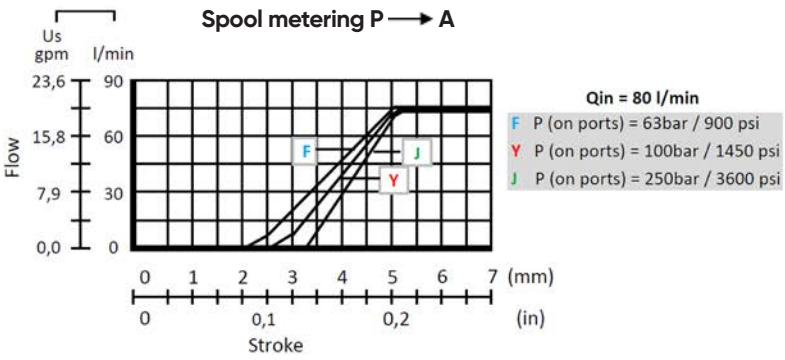

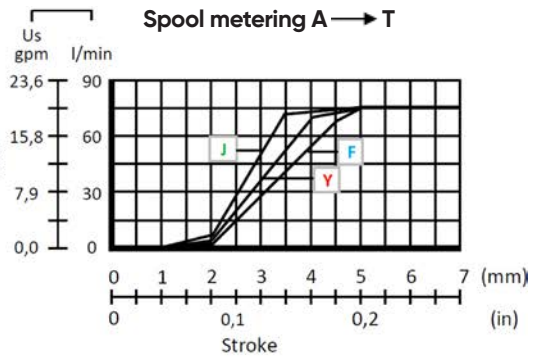

SPOOL OPTIONS

Spool Type - 2A

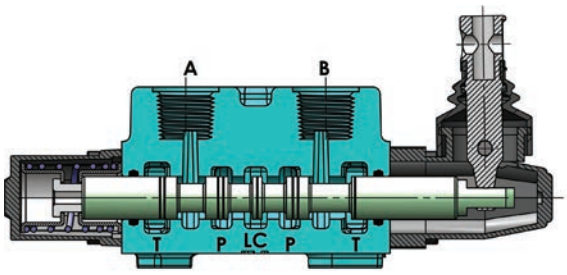

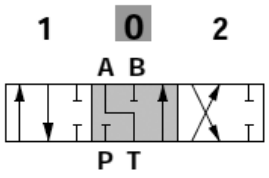

Spool Type - 3A

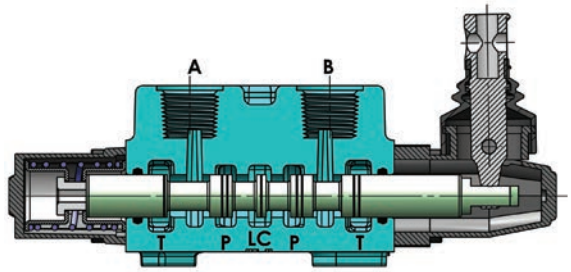

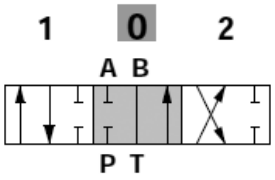

Spool Type - 4A

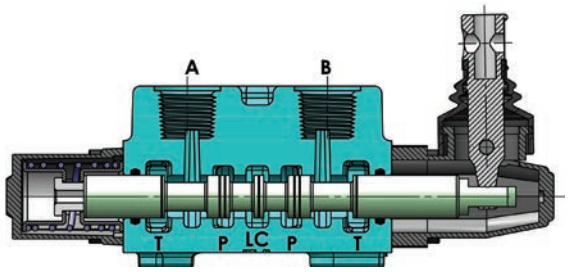

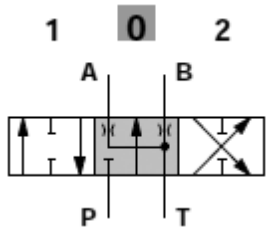

Spool Type - 5A

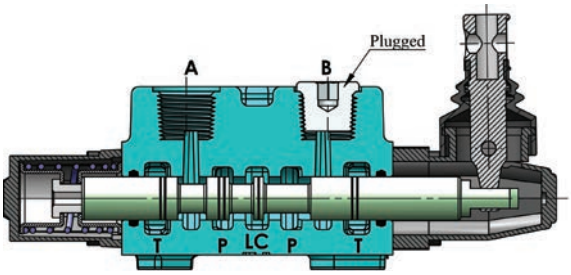

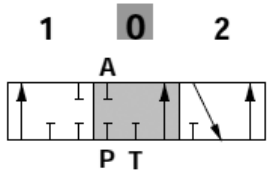

"B" port plugged

Spool Type - 6A

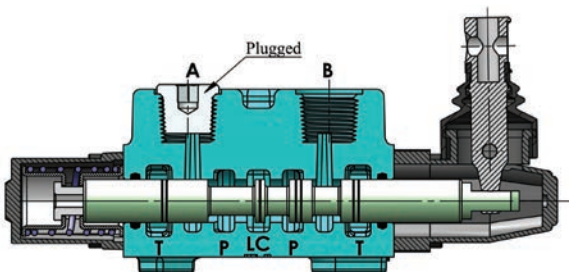

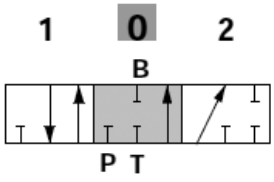

"A" port plugged

SPOOL POSITIONERS – SIDE OF RETURN

With Spring Return in Neutral Position

Kit No: **SR**

Sectional Appearance

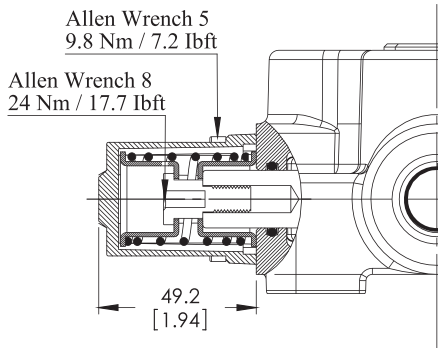

Diagram



With Detent

Kit No: **D**

Sectional Appearance

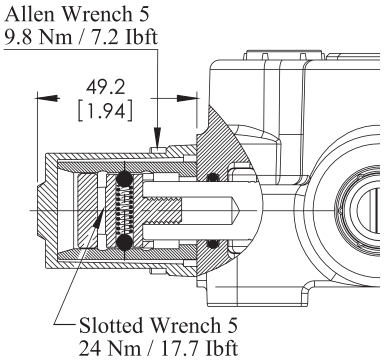

Diagram

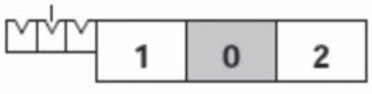

Force - stroke diagram

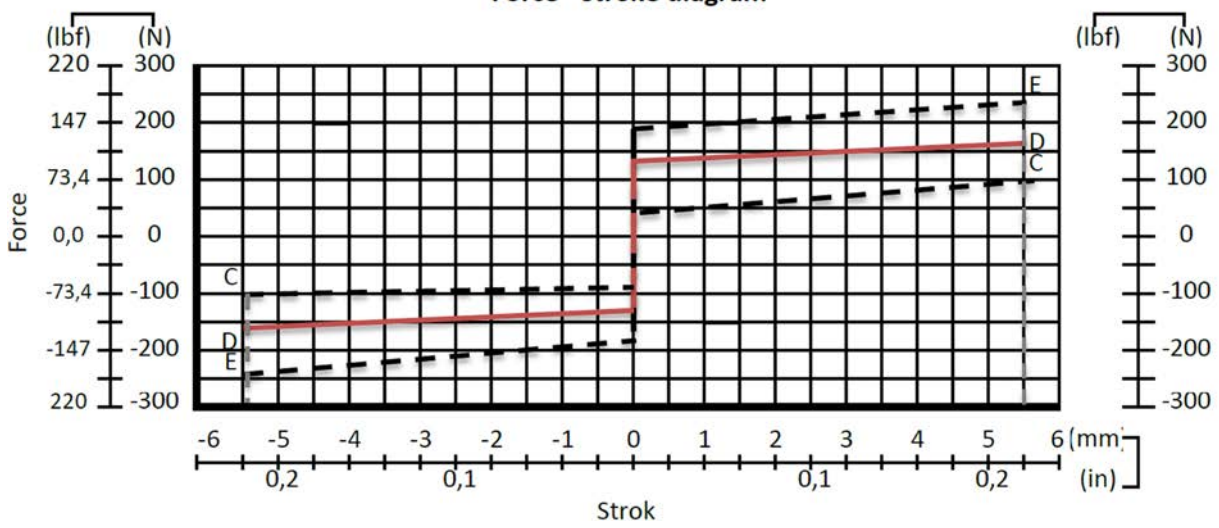

SPOOL POSITIONERS – SIDE OF RETURN

ON/OFF Pneumatic Control

Kit No: **80P**

Sectional Appearance

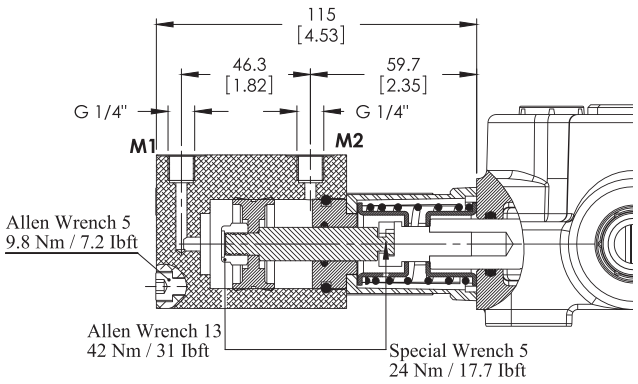

Diagram

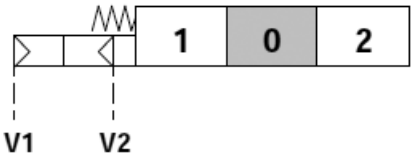

Operating Features

Pilot Pressure .....: 6 Bar (Max. 10) / 87 Psi (Max. 145)

ON/OFF Electro-Pneumatic Control

Kit No: **80EP**

Sectional Appearance

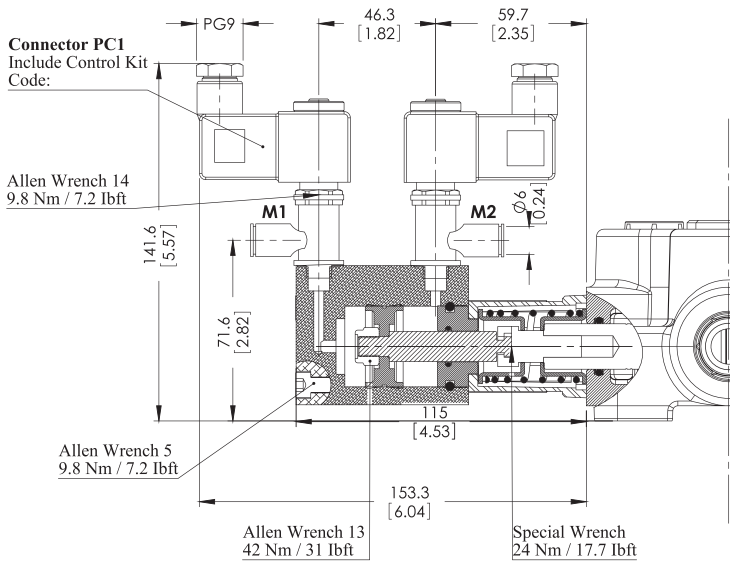

Diagram

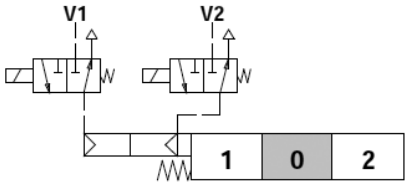

Operating Features

Pilot Pressure .....: 6 Bar (Max. 10) / 87 Psi (Max. 145)

Selenoid Operating Features

Nominal Voltage.....: 12VDC / 24 VDC

Power Rating.....: 6 W

SPOOL POSITIONERS – SIDE OF LEVER CONTROL

Lever Controls

Kit No: **STL - L0**

Sectional Appearance

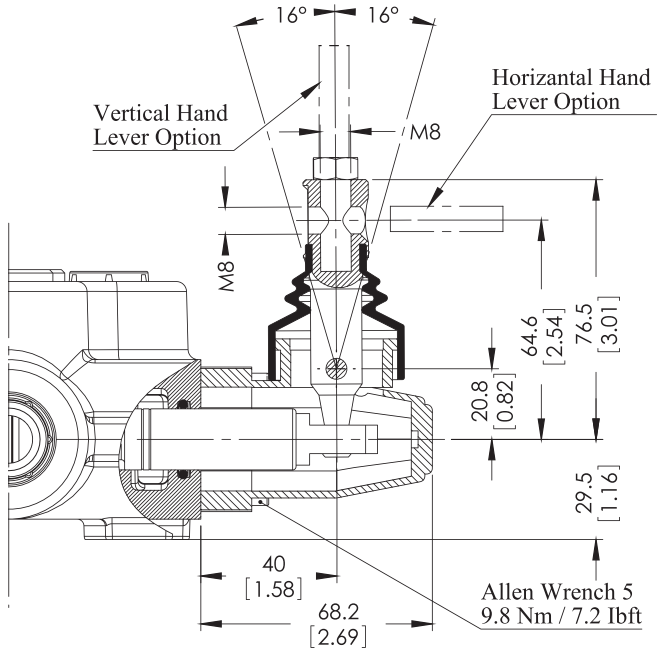

Diagram

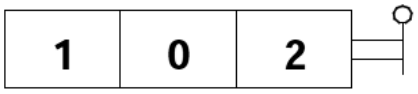

Kit No: **STL - L180**

Sectional Appearance

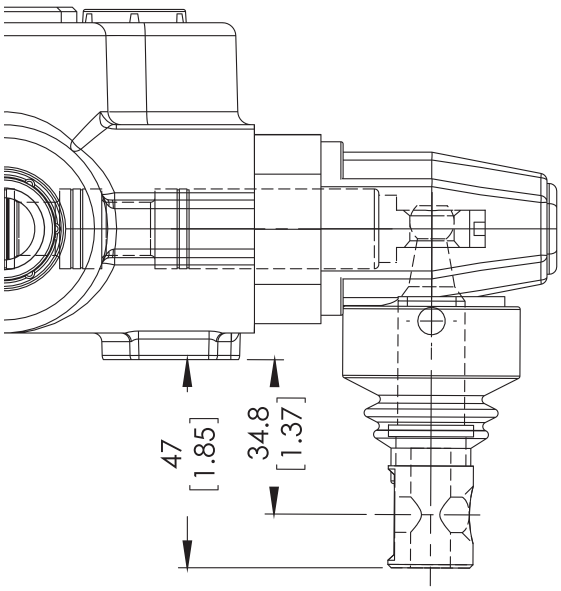

Diagram

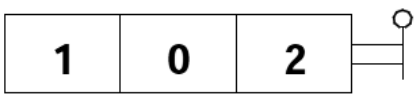

Note: Arm lever pivot box is aluminium cap protected. And it can be rotated 180º.

SPOOL POSITIONERS – SIDE OF LEVER CONTROL

Lever Controls - Joystick

Kit No: **JL**

Exploded View

Diagram

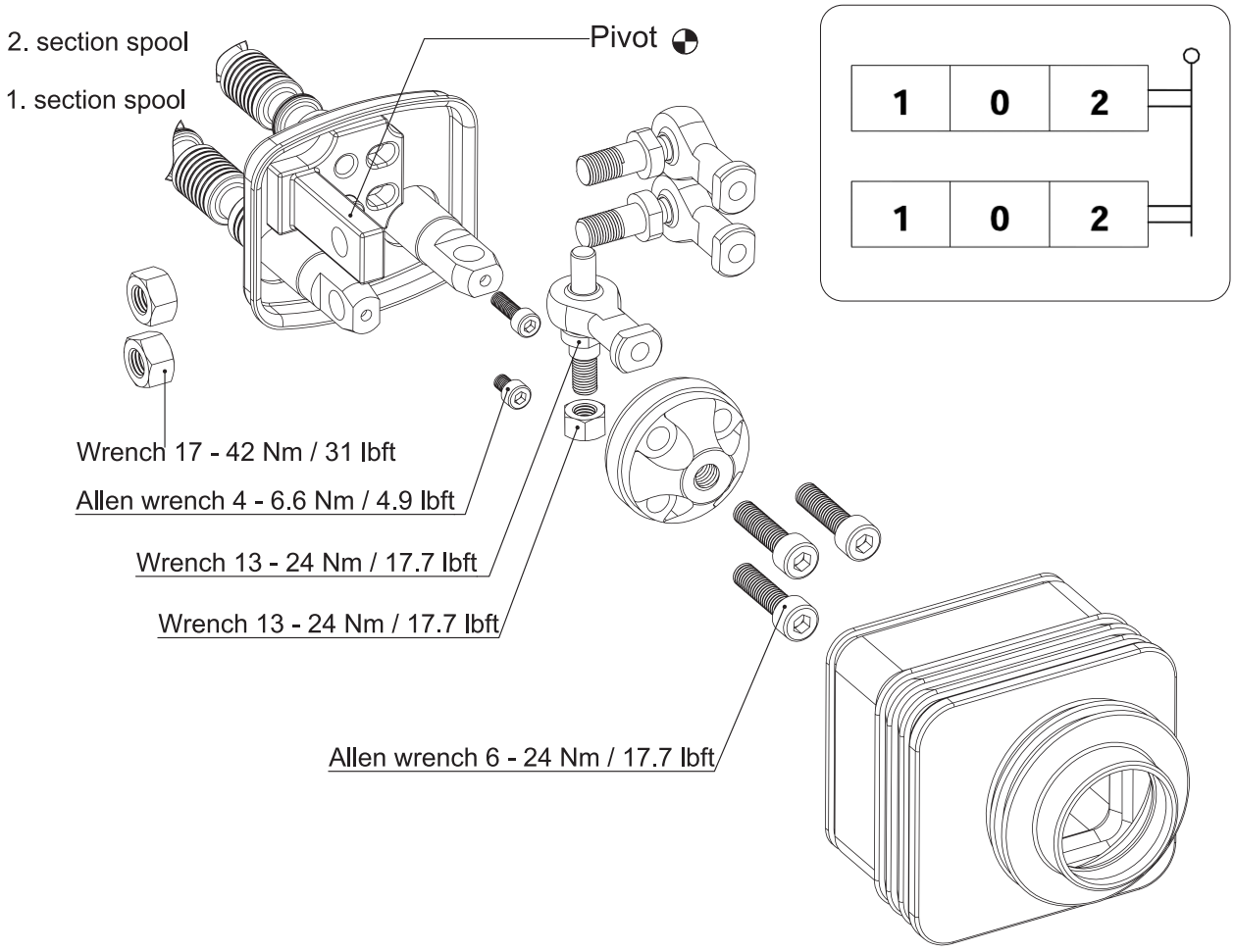

Operation Angle:

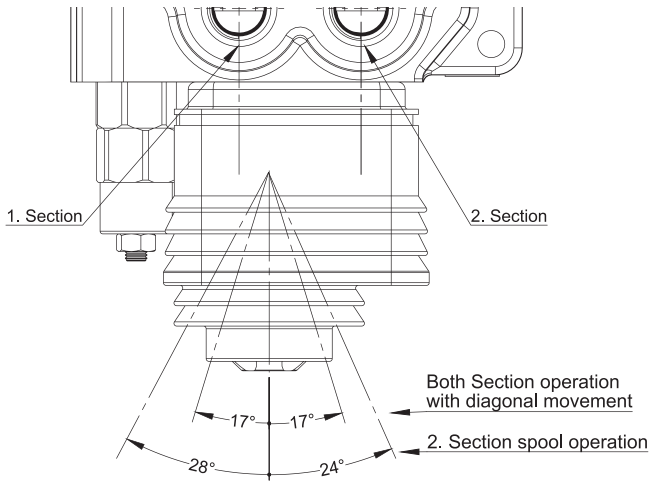

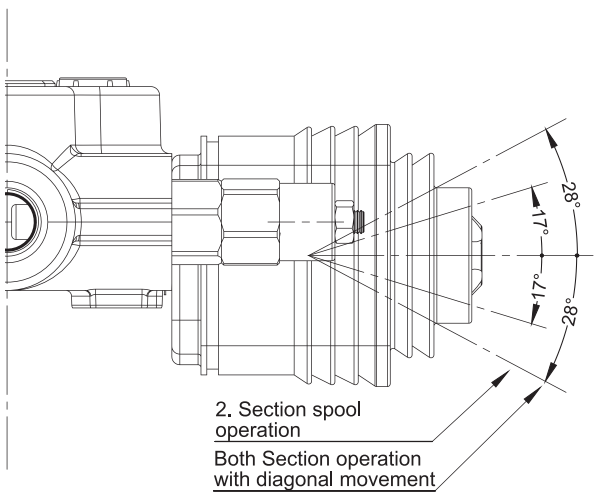

SPOOL POSITIONERS – SIDE OF LEVER CONTROL

Lever Controls - Joystick

Dimensions and movement sceme

Type No: **JL1** — **Application:** Pivot placed down on the Left

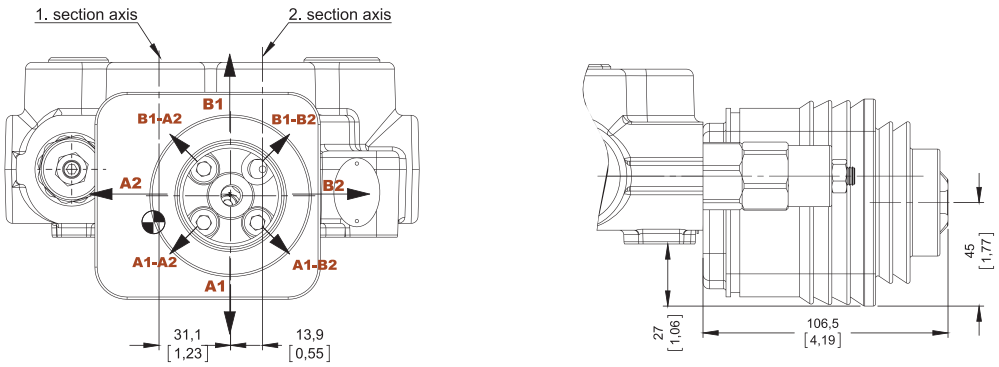

Type No: **JL2** — **Application:** Pivot placed down on the right

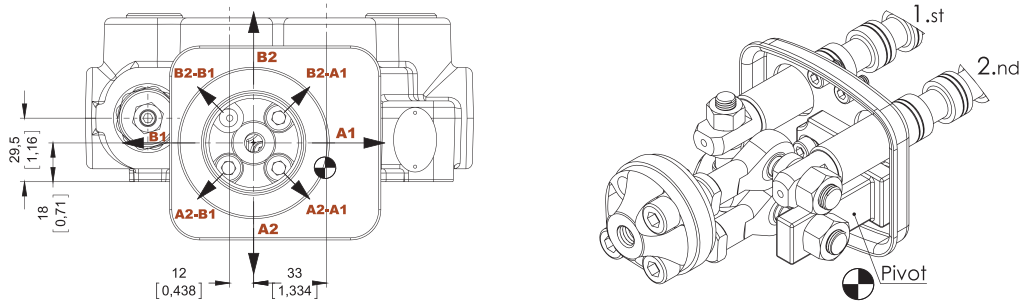

Type No: **JL3** — **Application:** Pivot placed above on the Left

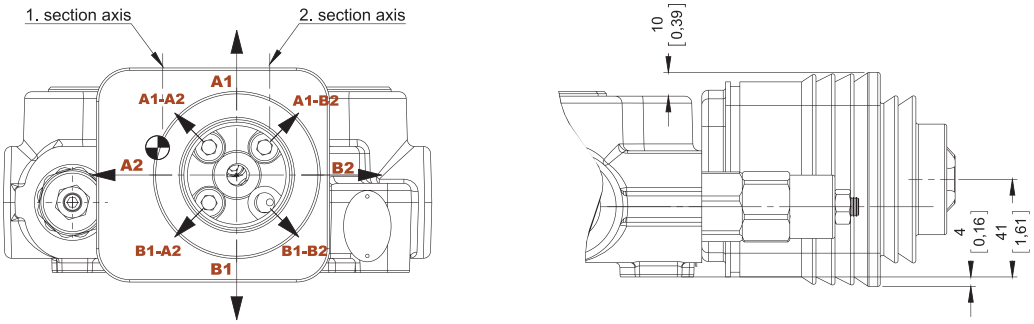

Type No: **JL4** — **Application:** Pivot placed above on the right

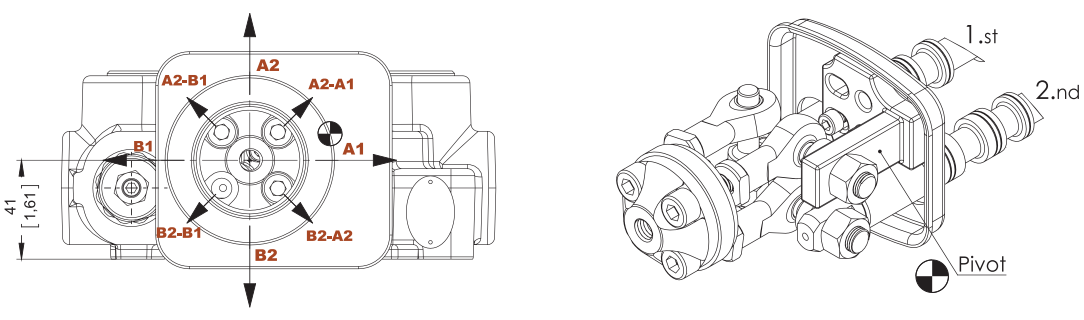

SPOOL POSITIONERS – SIDE OF LEVER CONTROL

Lever Controls - Cable Control

Kit No: **HL**

Exploded View | Diagram

Waterproof cap prearranged for remote control with flexible cable.

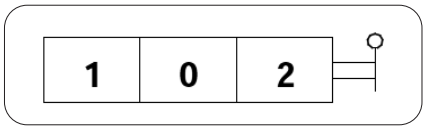

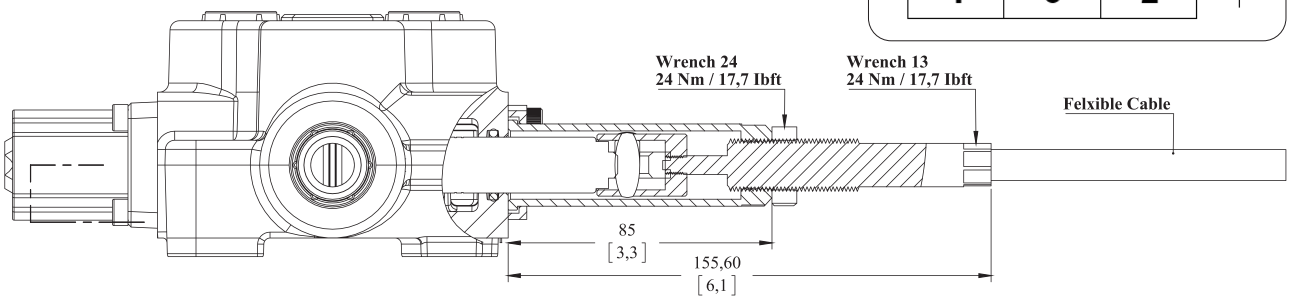

Note: Remote cable control has several options. Please indicte the cable length demanded and contact our sales department.

Example Operation

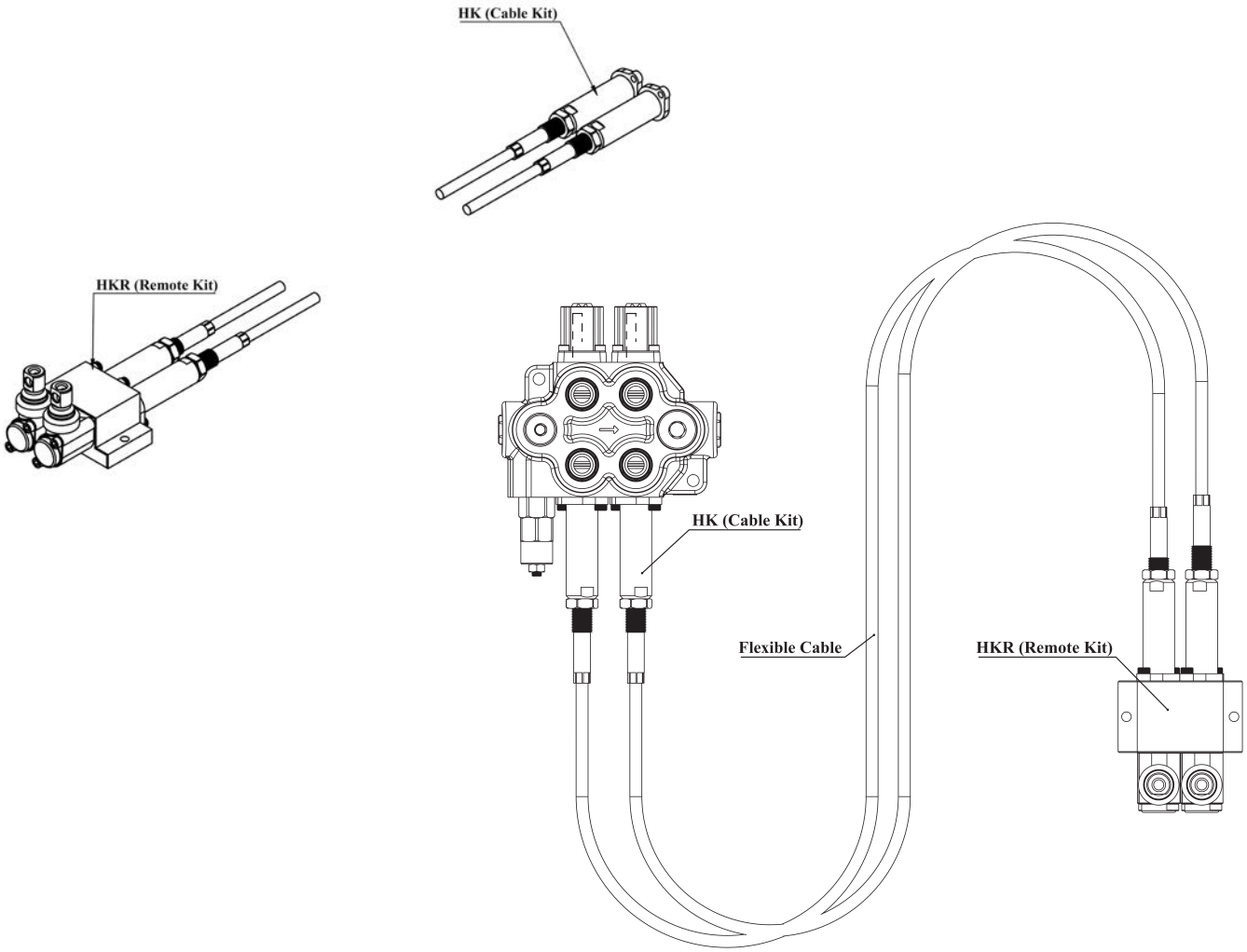

OUTLET PORT OPTIONS

Carry - Over Connection

Kit No: **CO**

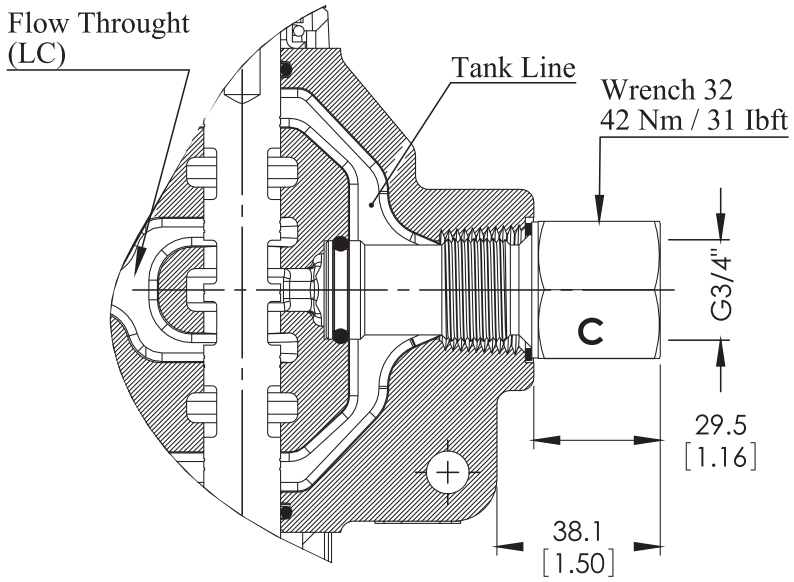

Sectional Appearance

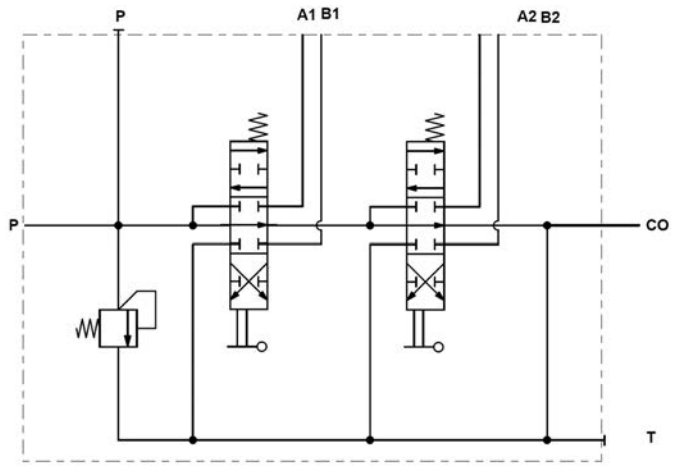

Hydraulic Circuit

Code: ORV M80-2P / SMR2-120 / 1A-SR-STL/1A-SR-STL/CO-PA1/SGT

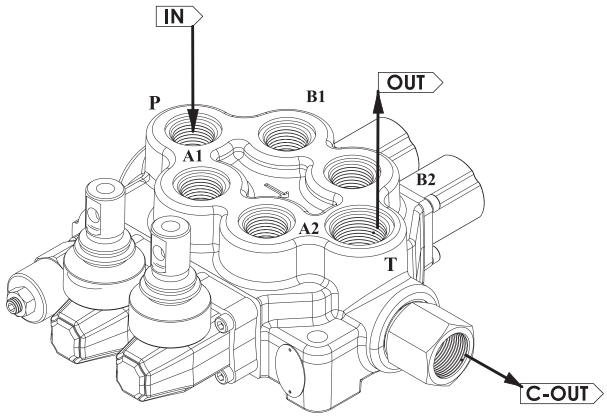

Direction of Port Connectted

SGT : See page 5 for Standard center

INSTALLATION AND MAINTENANCE

The ORV M80 valve is assembled and tested as per the technical specification of this catalog. Before the final installation on your equipment, follow the below recommendation:

• The valve can be assembled in any position, in order to prevent body deformation and spool sticking mount the product on a flat surface;

• In order to prevent the possibility of water entering the lever box and spool control kit, do not use high pressure wash down directly on the valve;

• Before painting, ensure plastic port plugs are tightly fitted.

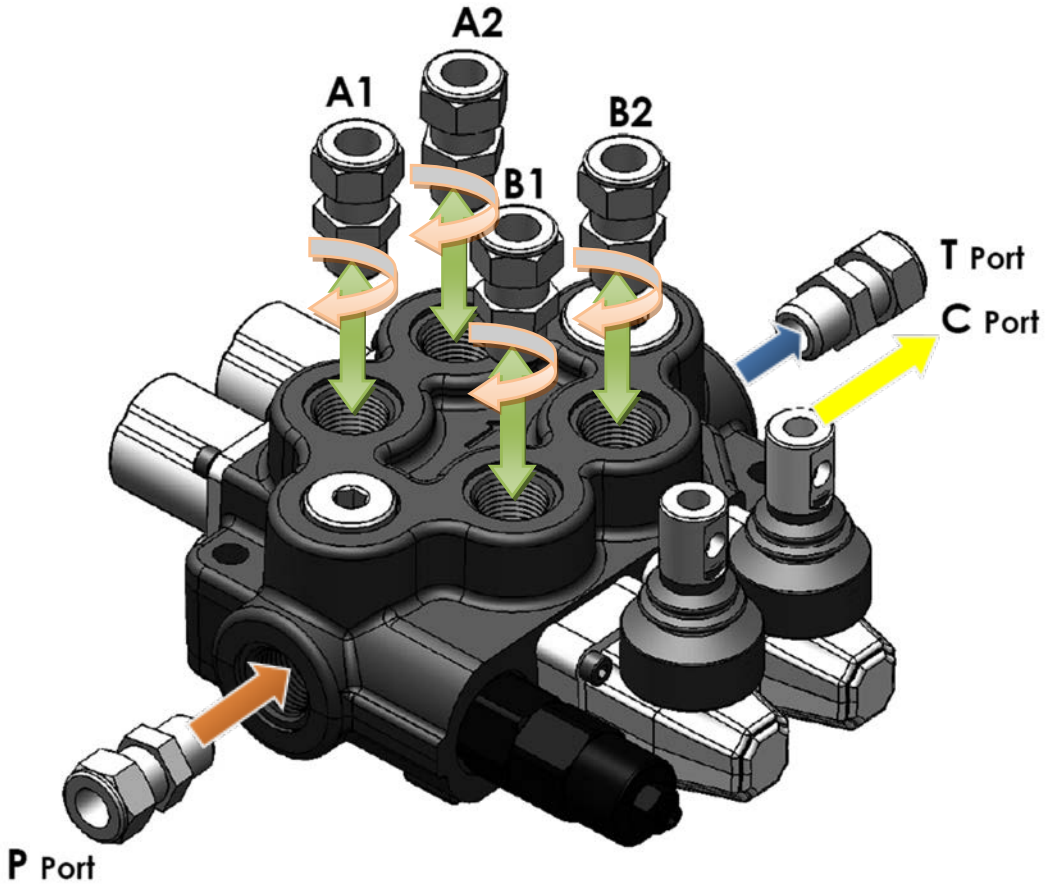

Threads Type (Nm / lbft)	P Port	A and B Port	T and C Port
BSP (ISO 228/1)	G 1/2	G 1/2	G 3/4
With O--Ring seal	50 / 36.9	50 / 36.9	70 / 51.6
With copper washer	60 / 44.3	60 / 44.3	70 / 51.6
With steel and rubber washer	60 / 44.3	60 / 44.3	70 / 51.6
BSP (ISO 228/1)	G 3/4	G 3/4	G 3/4
With O--Ring seal	70 / 51.6	70 / 51.6	70 / 51.6
With copper washer	70 / 51.6	70 / 51.6	70 / 51.6
With steel and rubber washer	70 / 51.6	70 / 51.6	70 / 51.6
UN--UNF (ISO 11926--1)	11/16--12 UNF--2B	9/16--18 UNF--2B	11/16--12 UNF--2B
With O--Ring seal	95 / 70	30 / 22.1	95 / 70
METRIC (ISO 262)	M27 x 2	M22 x 1.5	M27 x 2
With O--Ring seal	100 / 73.8	50 / 36.9	100 / 73.8
With copper washer	100 / 73.8	60 / 44.3	100 / 73.8
With steel and rubber washer	100 / 73.8	60 / 44.3	100 / 73.8

TECHNICAL DATA

Ports Dimensional Data

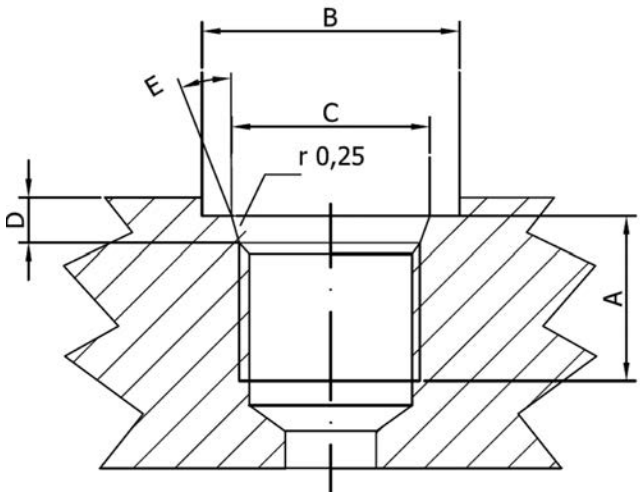

SAE UN-UNF (ISO 725)						
Dimensions		7/8-14 UNF SAE10		1"1/16-12 UN SAE12		1"5/16-12 UN SAE16	
mm	in						
A		17	0,67	20	0,79	20	0,79
B		34	1,34	41	1,61	49	1,92
C		23,9	0,94	29,2	1,15	35,5	1,40
D		2,5	0,10	3,3	0,13	3,3	0,13
E		15°		15°		15°	

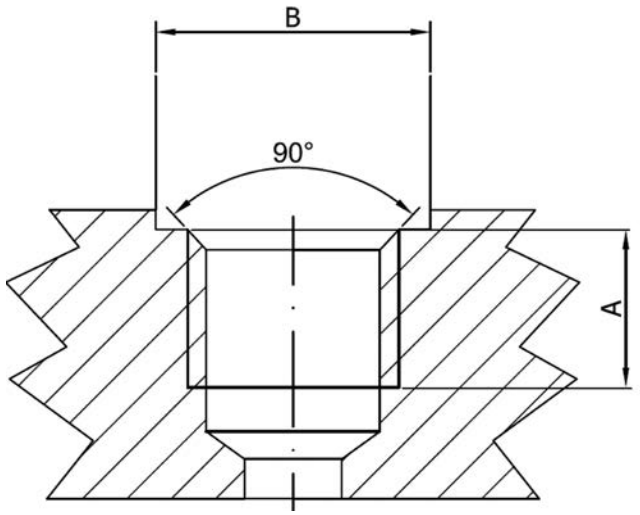

BSP (ISO 228)						
Dimensions		G 1/2"		G 3/4		G1	
mm	in						
A		16	0,63	18	0,71	20	0,79
B		27	1,06	33	1,30	40	1,57

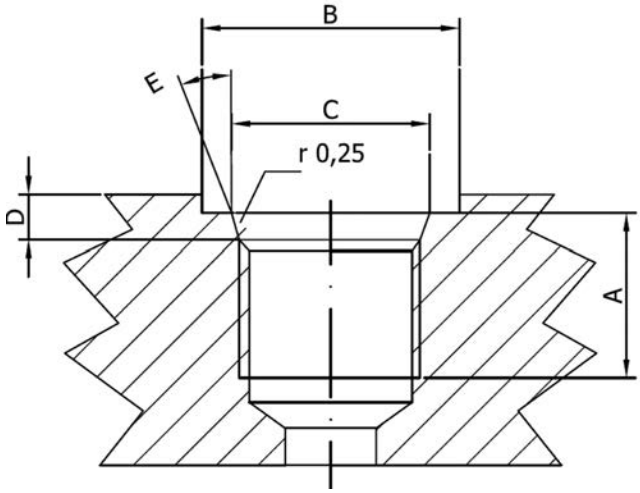

METRIC (ISO 262)					
Dimensions		M22x1,5 ISO 262		M27x2 ISO 262	
mm	in				
A		16	0,63	18	0,71
B		31,5	1,24	37,7	1,48

ORVAL HYDRAULIC

ORV M80



ORVAL HYDRAULIC

MONOBLOCK DIRECTIONAL CONTROL VALVES

ORV-M100

CE

TÜV International Certification
TÜV THÜRINGEN
CERT
AZAV
15 190 17185
TIC



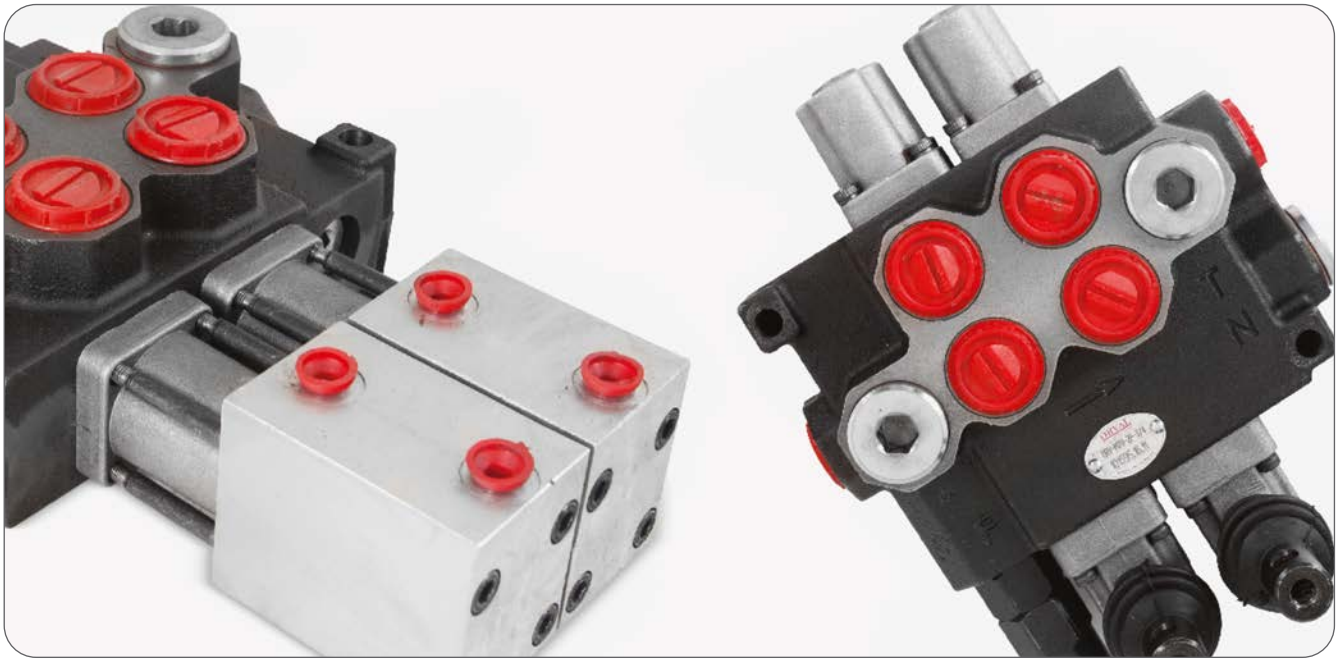

CONTENTS

Working Conditions	3
Dimensional Data	3
Hydraulic Circuit	3
Performance Data And Curve	3
Inlet Relief Options	3
Ordering Codes	3
Spool Options	3
Spool Positioners – Side of Return	3
Spool Positioners – Side of Lever Control	3
Spool Positioners – Side of Lever Control	3
Spool Positioners – Side of Lever Control	3
Spool Positioners – Side of Lever Control	3
Complete Control – On / Off Solenoid Control	3
Outlet Port Options	3
Outlet Port Options	3
Installation and Maintenance	3
Technical Data	3

Additional Informations

Note: This catalog shows the product in the most standard configurations. For Other Configurations, more detailed information or special request, Please contact Customer Service Dpt.

Warning!: All specifications of this catalog refer to the standard product at this date (01/2020) . ORVAL, oriented to a continuous improvement, reserves the right to discontinue, modify or revise the specifications, without notice.

ORVAL IS NOT RESPONSIBLE FOR ANY DAMAGE CAUSED BY
AN INCORRECT USE OF THE PRODUCT.

WORKING CONDITIONS

Nominal Flow Rating / Displacement	100 l/min	26 U.S.G.P.M
Maximum Working Pressure (Parallel Circuit)	315 Bar	4600 PSI
(Series Circuit)	250 Bar	3600 PSI
Max. Back Pressure	25 Bar	360 PSI
Oil Temperature with NBR Seals	-20 to 80 C°	-4 to 176 F °
with FPM (Viton) Seals	-20 to 100 C°	-4 to 212 F °
Oil Viscosity – Operating Range	From 10 to 75 mm2/s	From 10 to 75 cSt
Minumum / Maximum	10 / 400 mm2/s	10 / 400 cSt
Oil Filtration	≤30 µ	
Ambiant Temperature Range	-35 to 60 C°	-31 to 140 F °
Number Of Spools		1 to 6
Internal Leakage (at 100 bar (1450 PSI), 40C° (110 F°), 46 cSt – A(B)–T)	3 cm3/min	0,18 in3/min
Max. Level Of Contamination	19/16 - ISO 4406	

Not: This catalogue shows technical specifications measured with mineral oil of 46 mm2/s-46 cSt viscosity at 40 C° temparture.

Features

- Simple, compact and heavy duty designed monoblock valves from 1 to 6 sections for open and closed center hydraulic systems.
- Fitted with a main pressure relief valve and a load check valve.
- Optionaly Carry-Over port only parallel circuit.
- Interchangeable spool diameter is 18 mm – 0,71 in.
- Available manual, pneumatic, hydraulic and electro-pneumatic spool control kits.

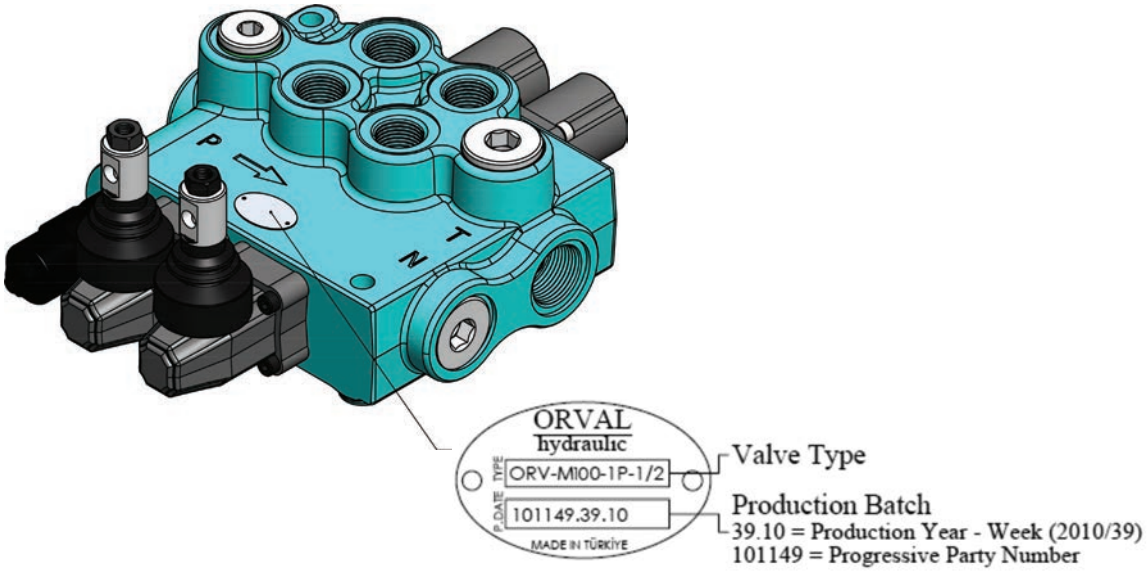

DIMENSIONAL DATA

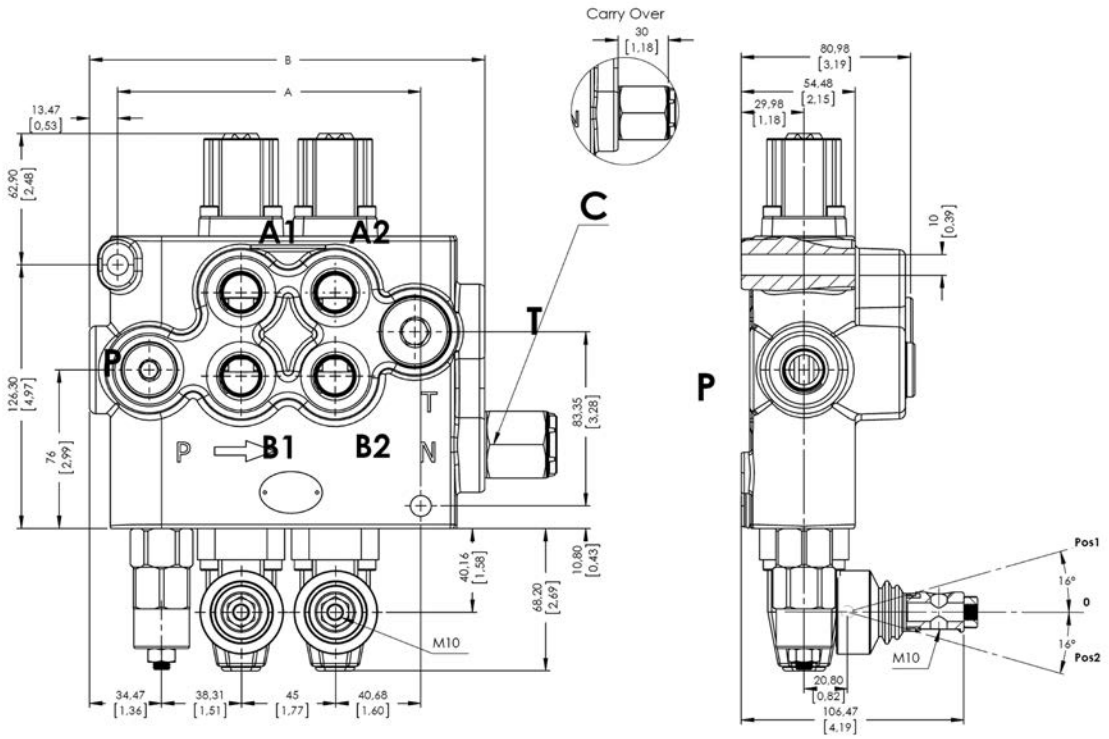

TYPE	A		B		Weight	
	mm	in	mm	in	Kg	lb
ORV-M100-1P	108	4,25	137	5,40	5,65	12,45
ORV-M100-2P	153	6,03	182	7,17	8,25	18,18
ORV-M100-3P	198	7,80	227	8,94	10,85	23,92
ORV-M100-4P	243	9,57	272	10,72	13,45	29,65
ORV-M100-5P	288	11,35	317	12,49	16,05	35,38
ORV-M100-6P	333	13,12	362	14,26	18,65	41,11

STANDARD THREADS

PORT	BSP (Iso 228) 1/2" Series	BSP (Iso 228) 3/4"Series	UN-UNF (Iso 11926-1)	Metric (Iso 262)
P Inlet	G 1/2	G 3/4	1 1/16-12 UN	M27x2
A-B Ports	G 1/2	G 3/4	7/8-14 UNF	M22x1.5
T Outlet	G 3/4	G 3/4	1 1/16-12 UN	M27x2
Pneumatic	G 1/4	G 1/4	NPTF 1/8 - 27	NPTF 1/8 - 27
Carry-Over	G 3/4	G 3/4	1 1/16-12 UN	G 3/4

HYDRAULIC CIRCUIT

Parallel - Standard Configurations With Side Inlet And Outlet Open Center

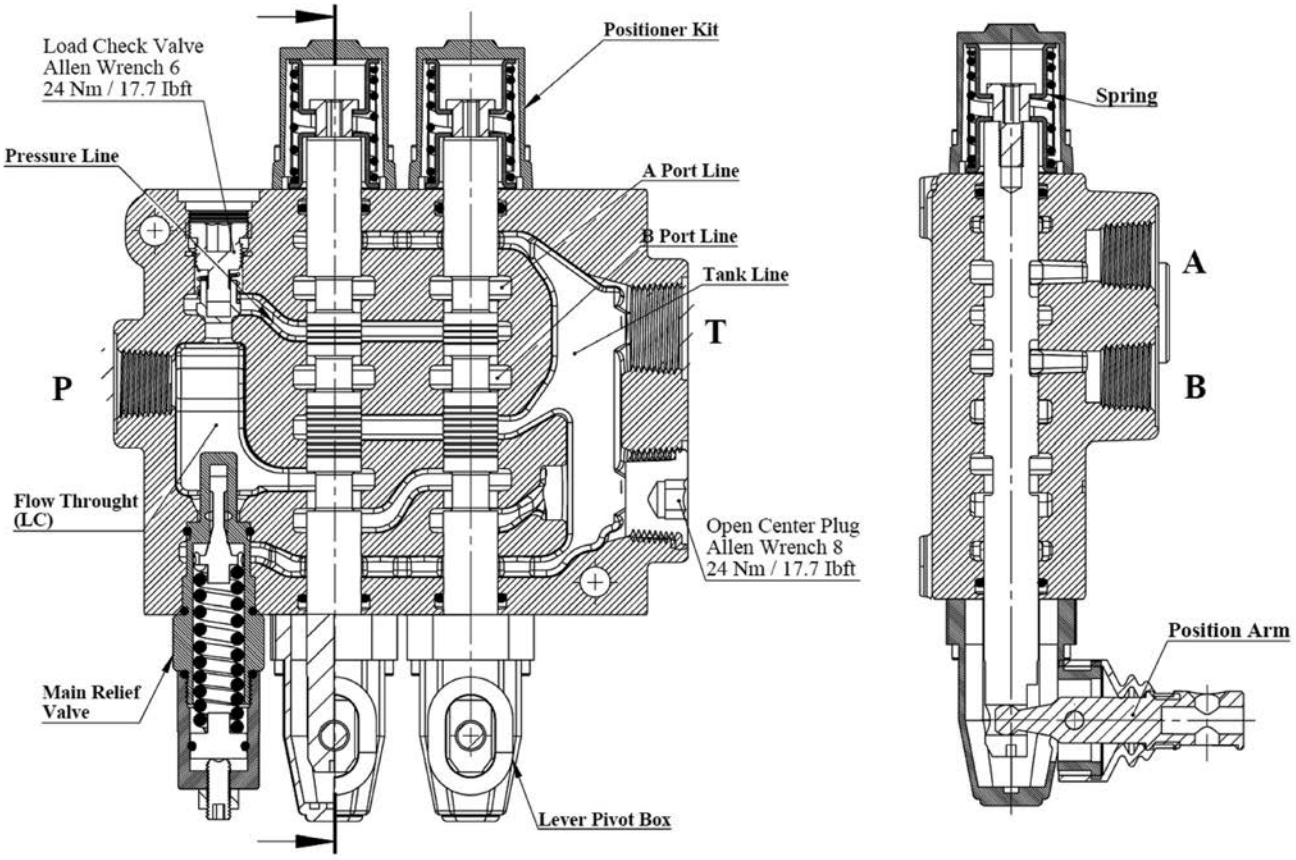

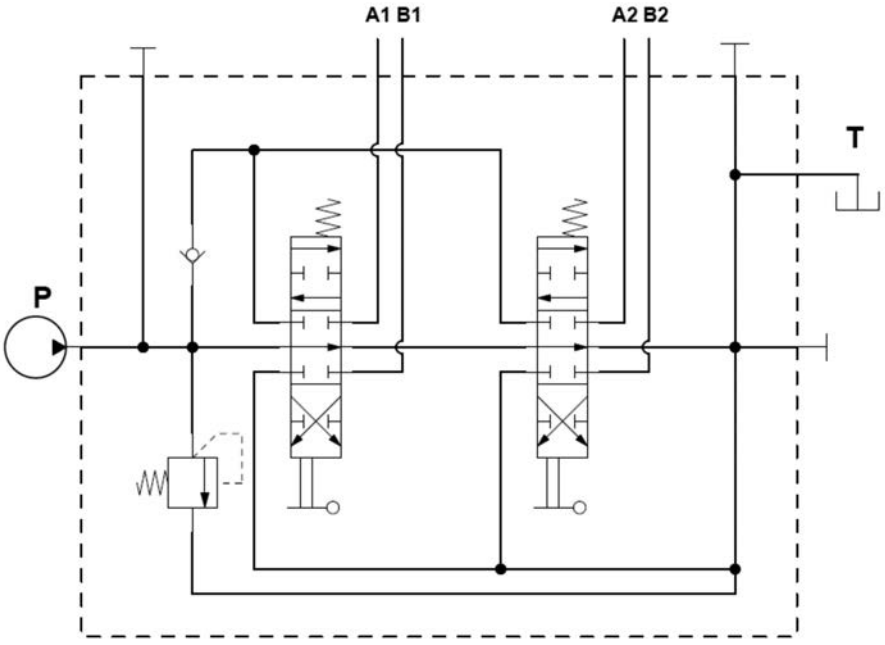

Code: ORV M100-2P / SMR2-120 / 1A-SR-STL/1A-SR-STL/PA1/SGT

PERFORMANCE DATA AND CURVE

Open Center - Pressure Drop (P-T)

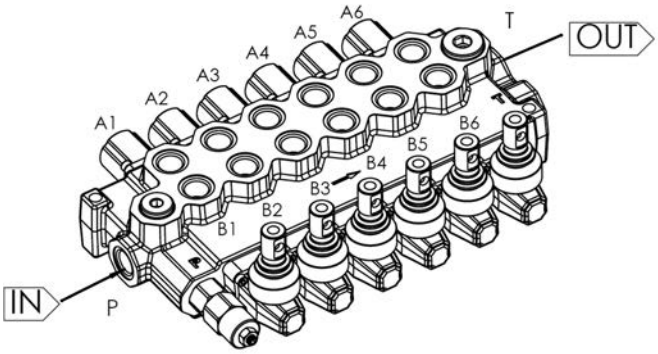

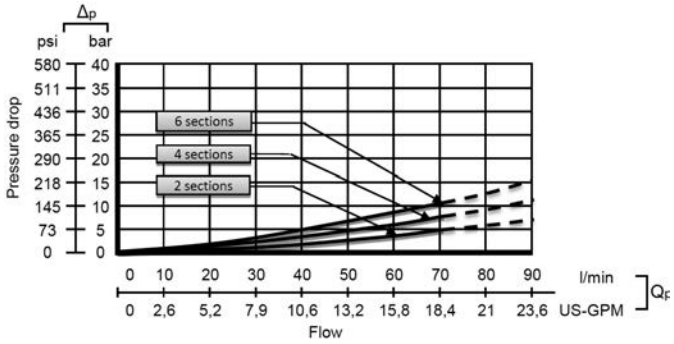

Inlet to Work Port - Pressure Drop (P-A/B)

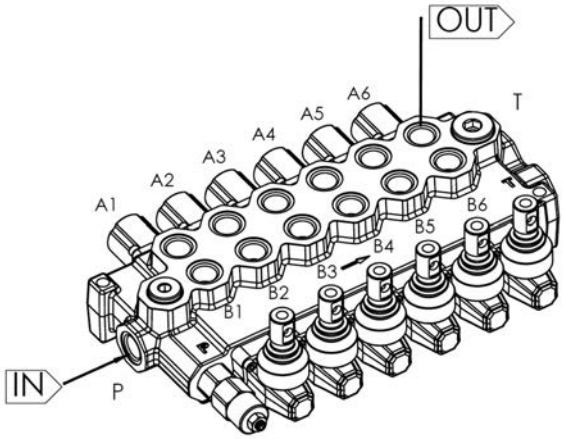

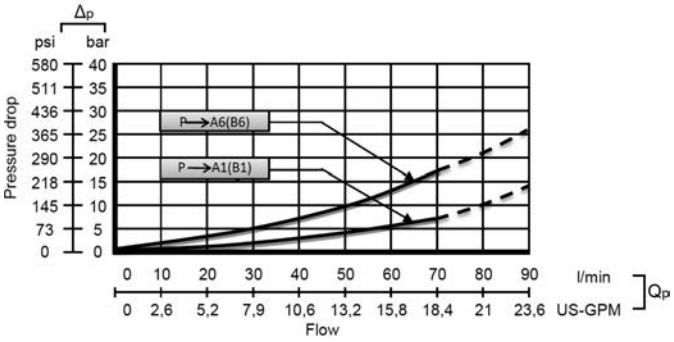

Work Port to Outlet - Pressure Drop (A/B-T)

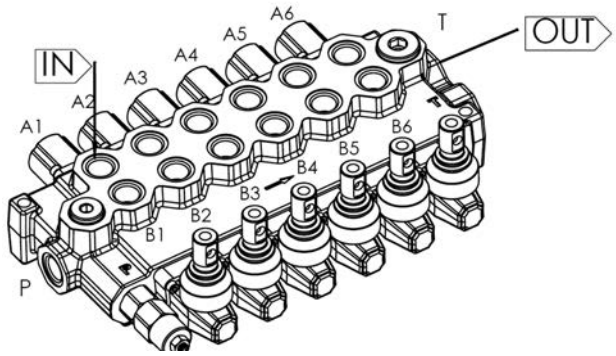

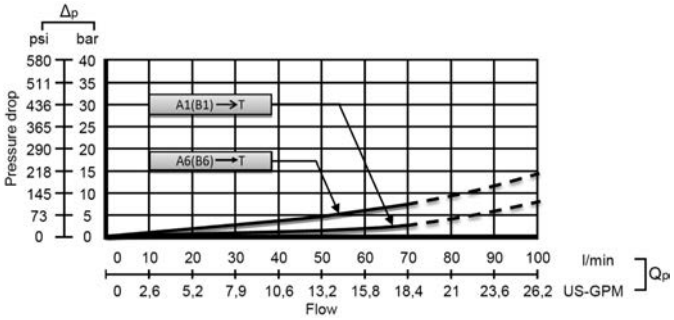

Note: Measured and chart value with spool type 1A.

INLET RELIEF OPTIONS

Direct Pressure Relief Valve

Code:

SMR2 – 120

- Pressure Setting Bar in (Standard 120 bar)
- Standard Main Relief Spring Type -2

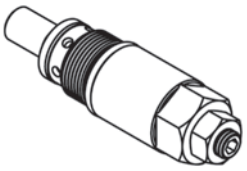



Performance Data

Spring Type Number: 1
Setting= 80 Bar -Range=63-125 Bar

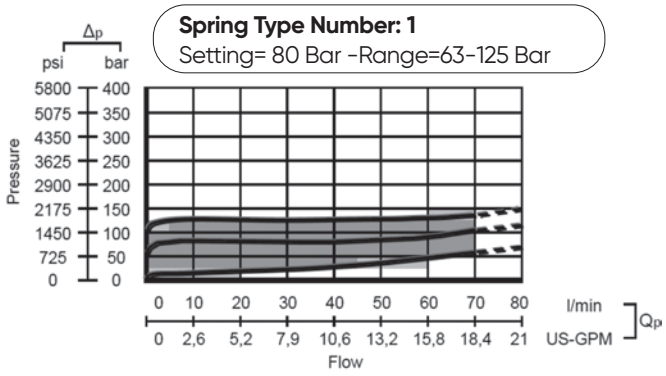

Spring Type Number: 2
Setting= 220 Bar -Range=200-315 Bar

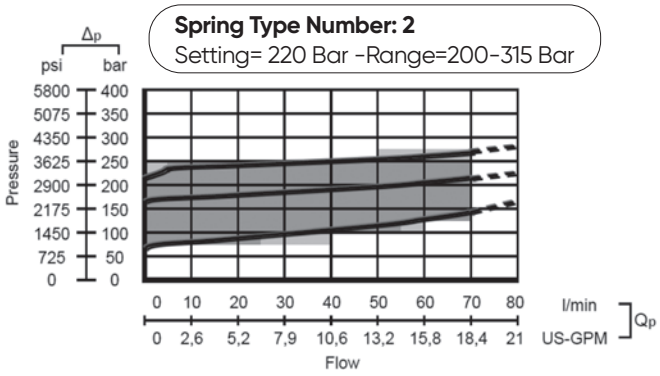

Spring Type Number: 3
Setting= 120 Bar -Range=100-165 Bar

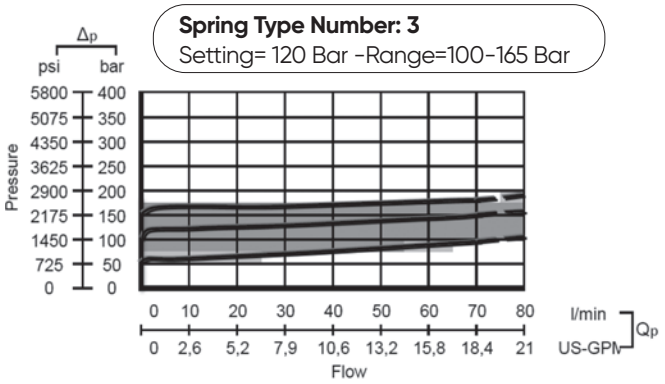

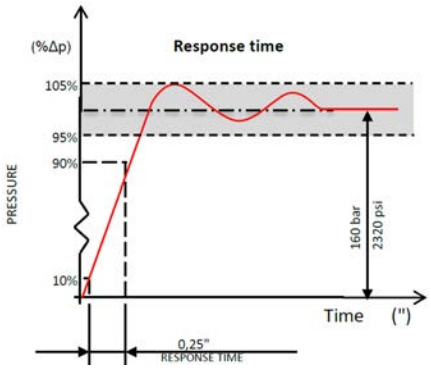

Adjustment Type on Valve

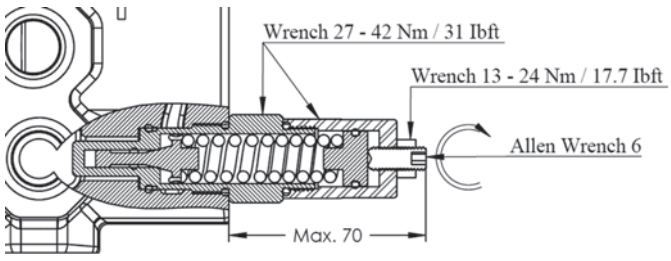

Relief Blanking Plug - WM

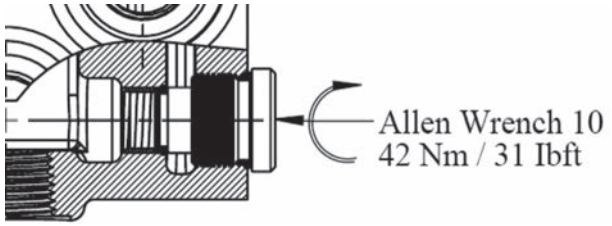

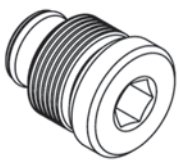



ORDERING CODES

Order Example

ORV M100-1P / SMR2-120 / 1A-SR-STL / 1A-100P-STL / CO - PL1 - P1 / SGT

1 | 2 | 3 4 5 | | 6 7 8 | 9

3 4 5: 1 st Section

1A-100P-STL: Following Section

6 7 8: Output Section

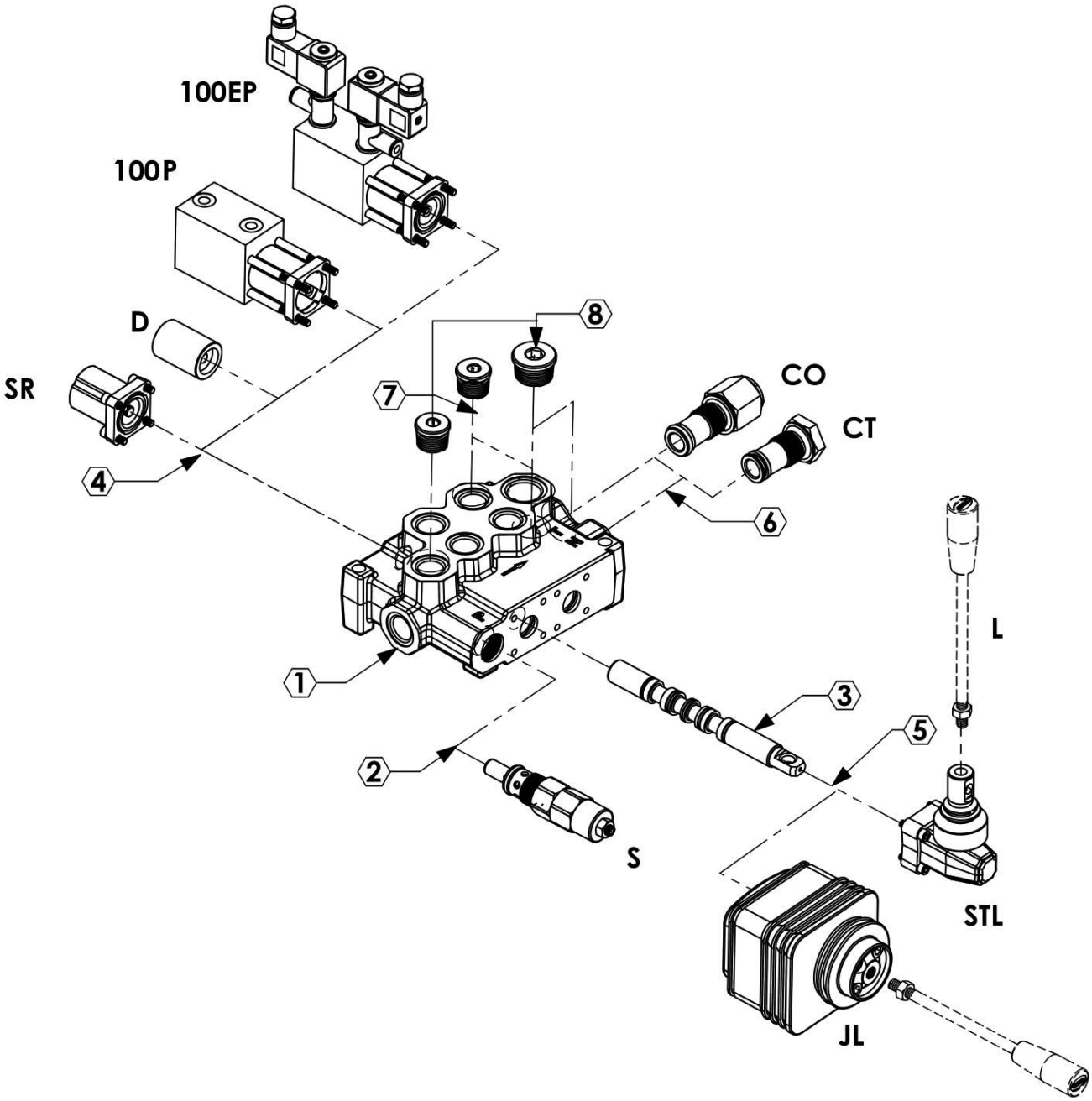

ORDERING CODES

1- Valve Type and Body

M100 =Valve Type - (M) - Monoblok
(100) - Max. Flow Rate
1P = Body for 1 Section - (1BM1100100)
2P = Body for 2 Sections - (1BM2100100)
3P = Body for 3 Sections - (1BM3100100)
4P = Body for 4 Sections - (1BM4100100)
5P = Body for 5 Sections - (1BM5100100)
6P = Body for 6 Sections - (1BM6100100)

2- Pressure Relief Options

SMR = Standard direct pressure relief valve
SMR1-080 – (2SMR1100080)–Range 63-125 bar
Setting 80 bar
SMR2-120 – (2SMR2100120)–Range 100-165 bar
Setting 120 bar
SMR3-220 – (2SMR31070220)–Range 200-315 bar
Setting 220 bar

3- Spool Options

1A -(3SM1100110) – 3 Positions ,Double acting
2A -(3SM1100120) – 3 Positions ,Double acting
A to tank B Blocked
3A -(3SM1100130) – 3 Positions ,Double acting
B to tank A blocked
4A -(3SM1100140) – 3 Positions ,Double acting
A and B tank
5A -(3SM1100150) – 3 Positions ,Single acting on
A (A to tank)
6A -(3SM1100160) – 3 Positions ,Single acting on
B (B to tank)

4- Spool Positioners

SR=Spring Return in neutral position – (4SR080100)
D =Detent in position 1, neutral and 2 - (4D080100)
100P=ON/OFF Pneumatic – (445P045100)
100EP=12 VDC ON/OFF electro-pneumatic –
(480EP080112)
100EH= 12 VDC/24 VDC ON/OFF electro-hydraulic
(3645EH100112)

5- Lever Options

STL=Standard lever –(5STL080100)
JL=Joystick lever for two sections operation
- (5JL 080100)

6- Output Options

PA2(T) =G3/4 Top output plug -(6PL1080134)
PA2(S) =G3/4 Side output plug -(6PL1080134)
CO =G3/4 Carry–Over Connector -(6CO080100)
CT = G3/4 Carry–Over Plug -(6CT100100)

7- Ports Plug Options "If Required"

PL3(5A) = Plug for single action spool for 5A
G3/4 –(6PL1080134)
PL3(6A) = Plug for single action spool for 6A
G3/4 –(6PL1080134)
PL2(5A) = Plug for single action spool for 5A
G1/2- (6PL1040112)
PL2(6A) = Plug for single action spool for 6A
G1/2- (6PL1040112)
*Page 12 for detail spool options.

8- Ports Input Plug Options

PI1(T) = G1/2 Top input – (6PL1040112)
PI1(S) = G1/2 Side input – (6PL1040112)
PI3(T) = G3/4 Top input - (6PL1080134)
PI3(S) = G3/4 Side input - (6PL1080134)

9- Ports Thread Options

SGT1 =1/2" Series Port Options - (9P045112)
SGT3 =3/4" Series Port Options - (9P080134)
UNF =UNF Series Port Options - (9U045138)
M =Metric Series Port Options - (9M045138)
*Page 4 for detail port information.

HandLever

L = Standard HandLever (L=120mmxM8) -(7L040100)
HL = Remote Cable Kit – (80HL80100)

SPOOL OPTIONS

Spool Type - 1A

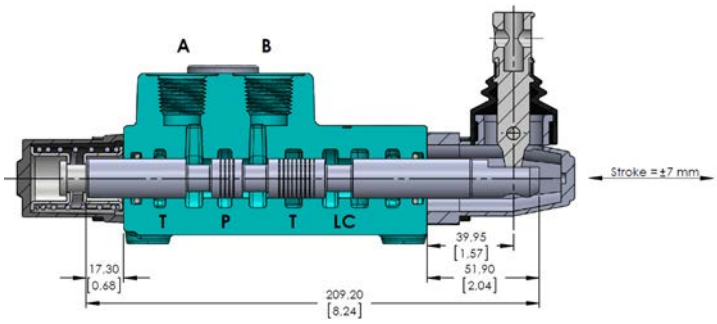

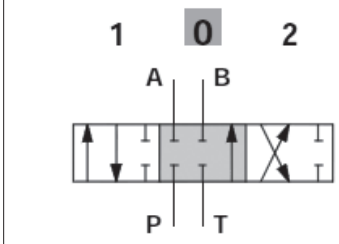

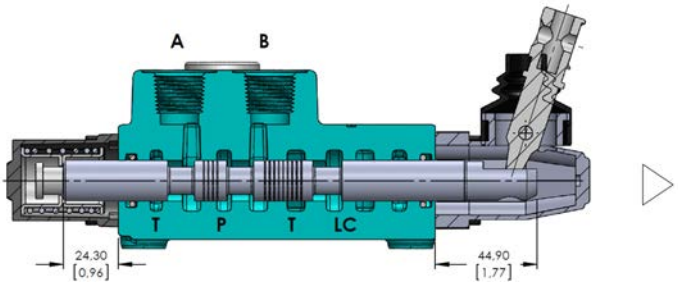

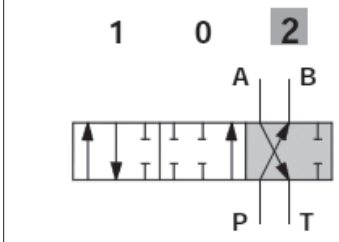

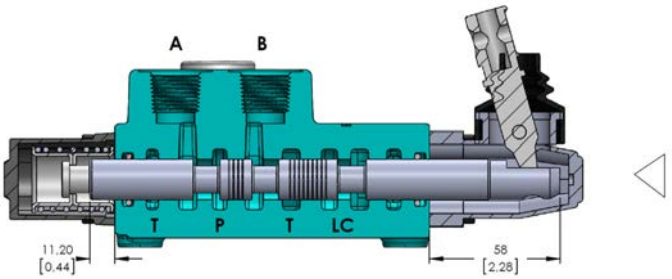

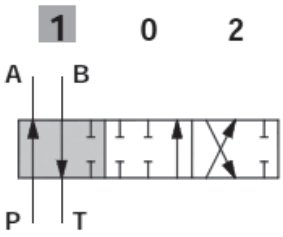

Performance Curve And Data

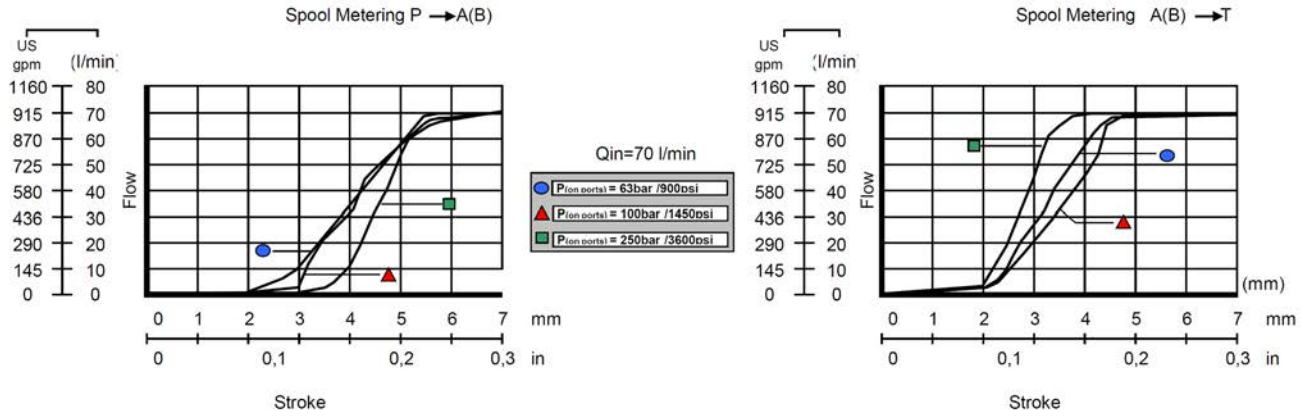

SPOOL OPTIONS

Spool Type - 2A

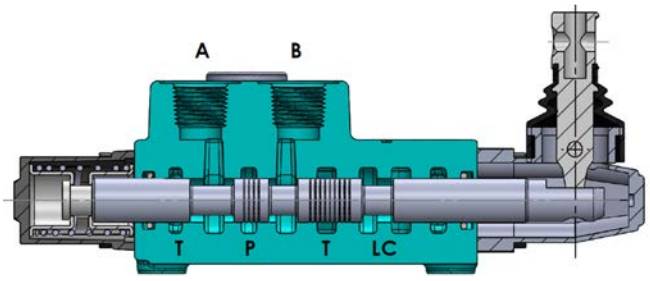

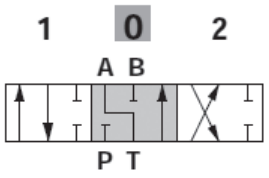

Spool Type - 3A

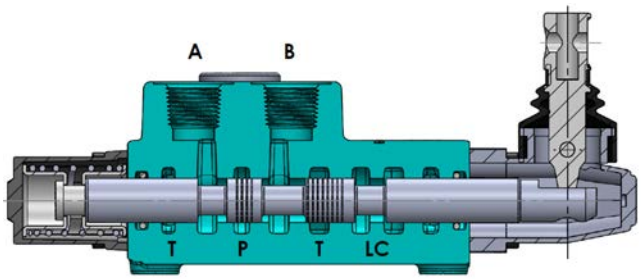

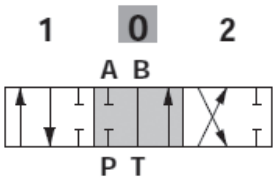

Spool Type - 4A

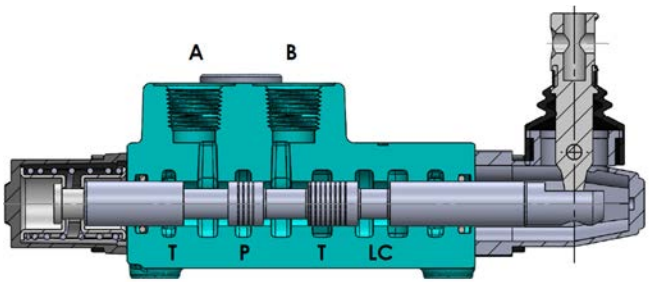

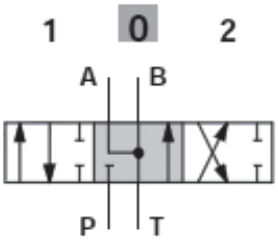

Spool Type - 5A

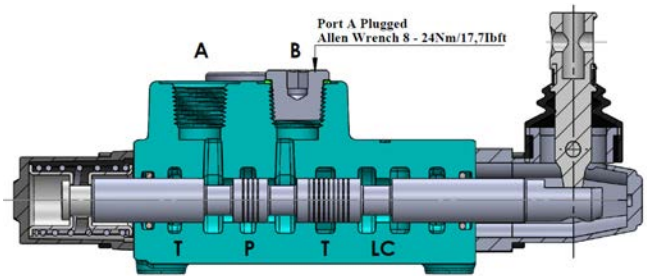

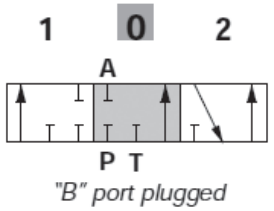

"B" port plugged

Spool Type - 6A

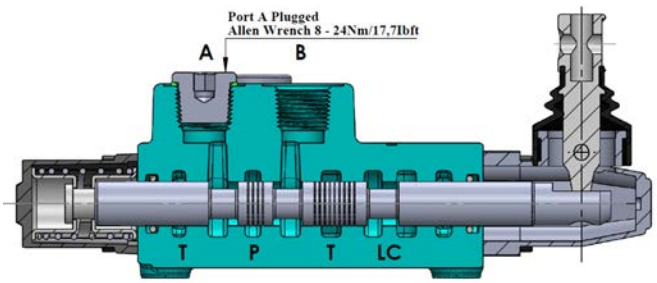

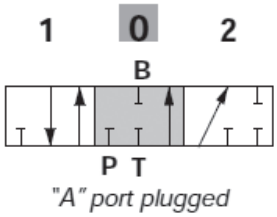

"A" port plugged

SPOOL POSITIONERS – SIDE OF RETURN

With Spring Return in Neutral Position

Kit No: **SR**

Sectional Appearance

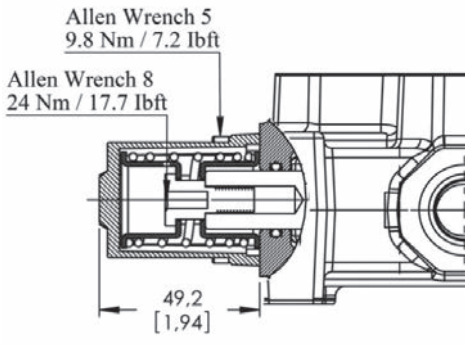

Diagram



With Detent

Kit No: **D**

Sectional Appearance

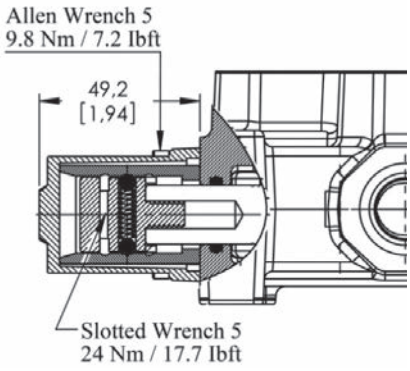

Diagram

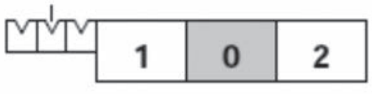

Force - stroke diagram

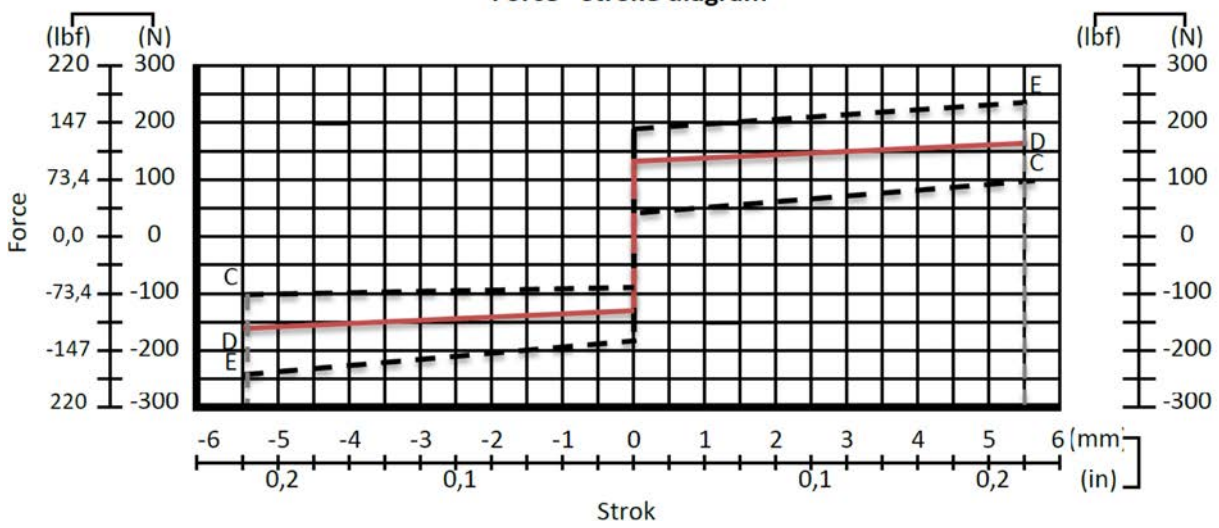

SPOOL POSITIONERS – SIDE OF RETURN

ON/OFF Pneumatic Control

Kit No: **100P**

Sectional Appearance

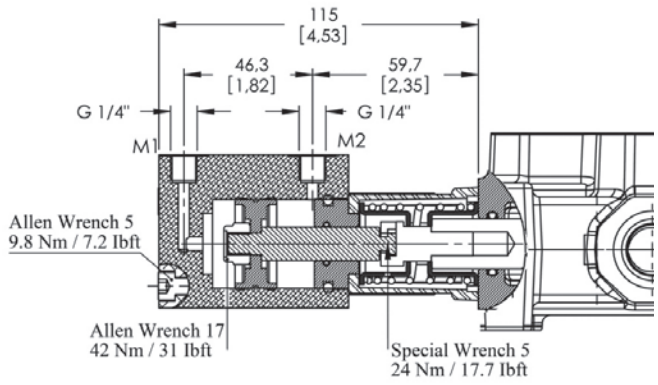

Diagram

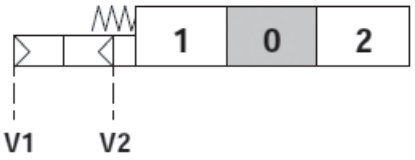

Operating Features
Pilot Pressure .....: 6 Bar (Max. 10) / 87 Psi (Max. 145)

ON/OFF Electro-Pneumatic Control

Kit No: **100EP**

Sectional Appearance

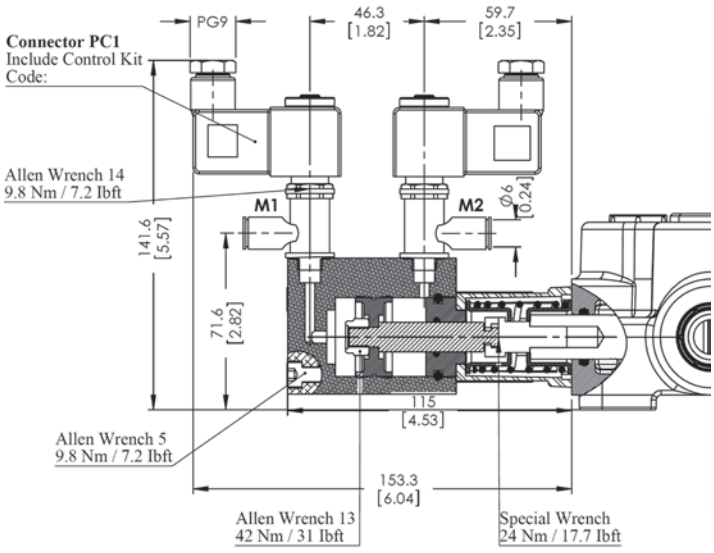

Diagram

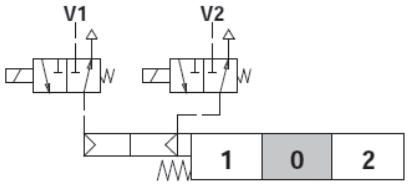

Operating Features
Pilot Pressure .....: 6 Bar (Max. 10) / 87 Psi (Max. 145)
Selenoid Operating Features
Nominal Voltage.....: 12VDC / 24 VDC
Power Rating.....: 6 W

SPOOL POSITIONERS – SIDE OF RETURN

ON/OFF Electro - Hydraulic Control

Kit No: **100EH**

Sectional Appearance

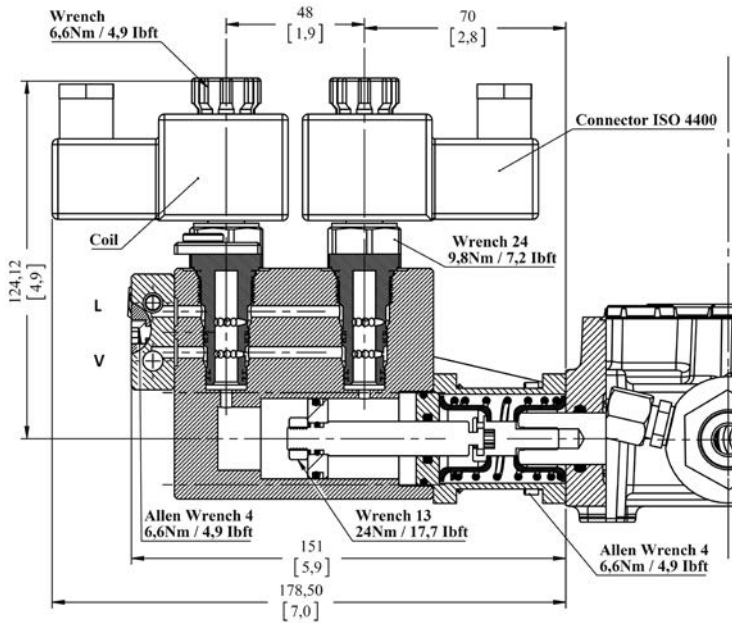

Diagram

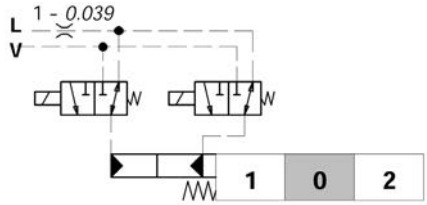

Operating Features

Pilot Pressure .....: 10 Bar / 145 Psi
: 50 Bar / 725 Psi
Max back pressure on drain L.....:25 Bar / 360 Psi

Selenoid Operating Features

Coil Connection.....: ISO 4400
Nominal voltage.....: 12 VDC / 24 VDC
Power rating.....: 21 W
Duty cycle.....: %100
Protection type.....: IP 65
Nominal voltage tolerance.....: ±10
Max temperatures.....: 100 C°
Stroke.....: ±5,5 mm

ORDER CODE

External Pilot Collector	Standard Pilot Collector
COL 11 - 10COL1001 – Kit For Section 1	COL 21 - 10COL2001 – Kit For Section 1
COL 12 - 10COL1001 – Kit For Section 2	COL 22 - 10COL2001 – Kit For Section 2
COL 13 - 10COL1001 – Kit For Section 3	COL 23 - 10COL2001 – Kit For Section 3
COL 14 - 10COL1001 – Kit For Section 4	COL 24 - 10COL2001 – Kit For Section 4
COL 15 - 10COL1001 – Kit For Section 5	COL 25 - 10COL2001 – Kit For Section 5
COL 16 - 10COL1001 – Kit For Section 6	COL 26 - 10COL2001 – Kit For Section 6
COL 17 - 10COL1001 – Kit For Section 7	COL 27 - 10COL2001 – Kit For Section 7
COL 18 - 10COL1001 – Kit For Section 8	COL 28 - 10COL2001 – Kit For Section 8

SPOOL POSITIONERS – SIDE OF RETURN

ON/OFF Electro - Hydraulic Control Connections

Connection Type 1: **Collector kit for external pilot and drain**

Sectional Appearance

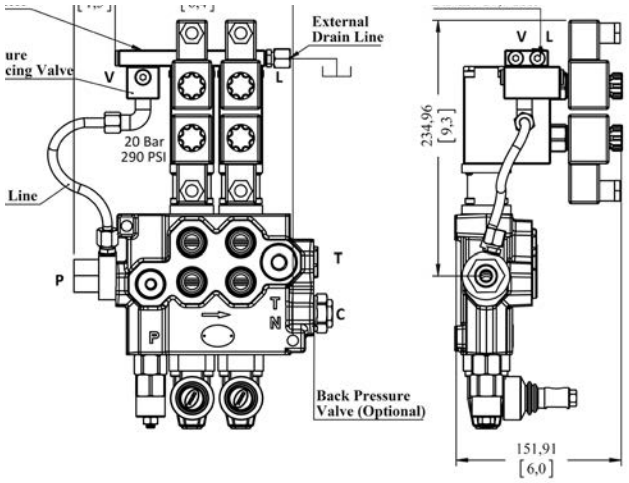

Diagram

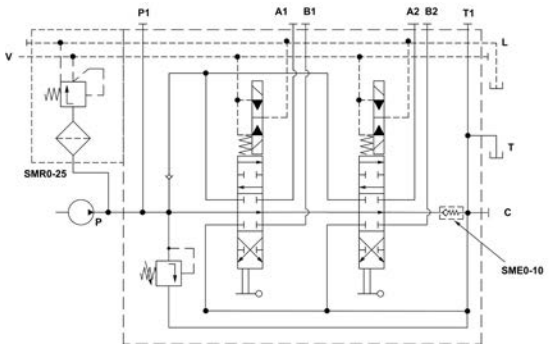

Operating Features
External Pressure Reducing Valve .....: 20 Bar / 290 Psi (For V line)
Code= ORV M100-2P (SD(LA)-SMR2-125-PP)/P-1A-STL-45EH/P-1A-STL-45EH (SMR0 -COL12-12V)/ SO-PT1 /SGT

Connection Type 2: **Collector kit with pilot and drain lines**

Sectional Appearance

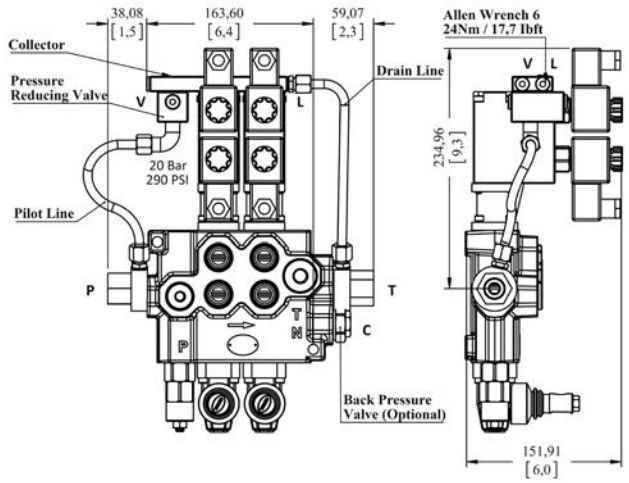

Diagram

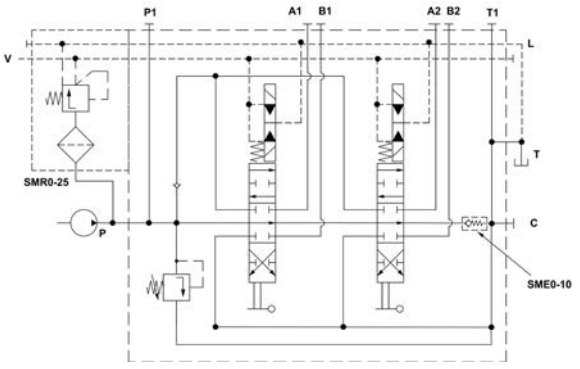

SMR 0-25 Valve Operating Features (Pressure reducing valve)
Outlet Pressure .....: 20 Bar / 290 Psi
Max. Flow.....: 8 l/min
Filtering .....:80 µ
Code= ORV M100-2P (SD(LA)-SMR2-125-PP)/P-1A-STL-45EH/P-1A-STL-45EH (SMR0 –COL22-12V)/ SO-PT1/SGT

SPOOL POSITIONERS – SIDE OF LEVER CONTROL

Lever Controls

Kit No: **STL - L0**

Sectional Appearance

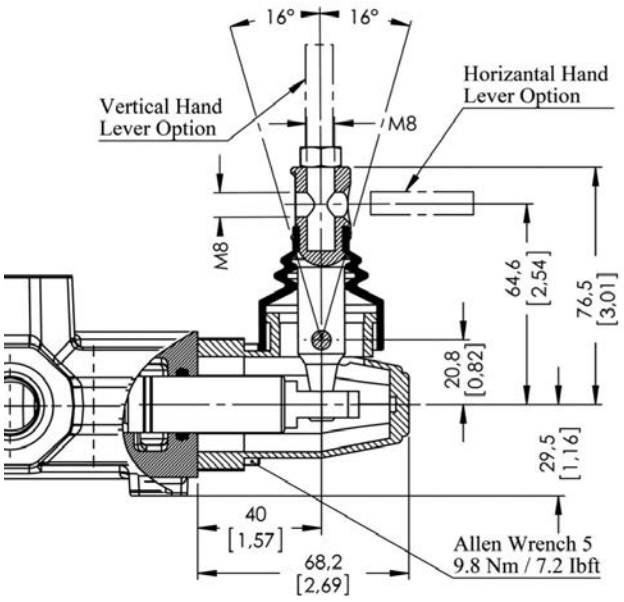

Diagram

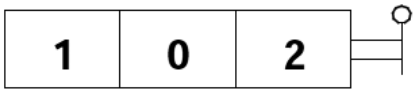

Kit No: **STL - L180**

Sectional Appearance

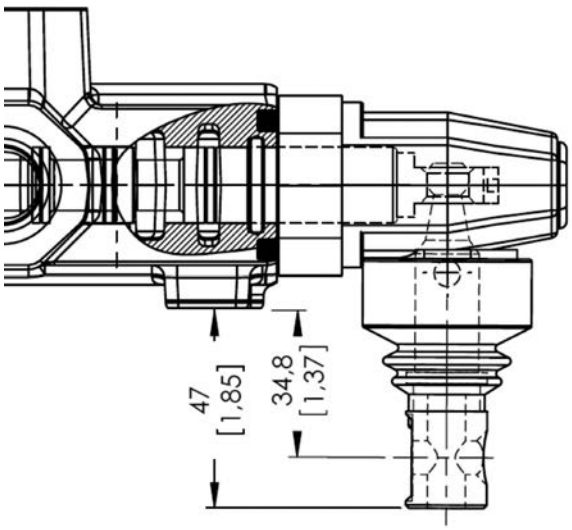

Diagram

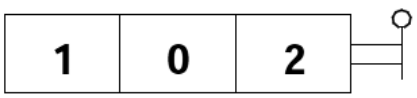

Note: Arm lever pivot box is aluminium cap protected. And it can be rotated 180º.

SPOOL POSITIONERS – SIDE OF LEVER CONTROL

Lever Controls - Joystick

Kit No: **JL**

Exploded View | Diagram

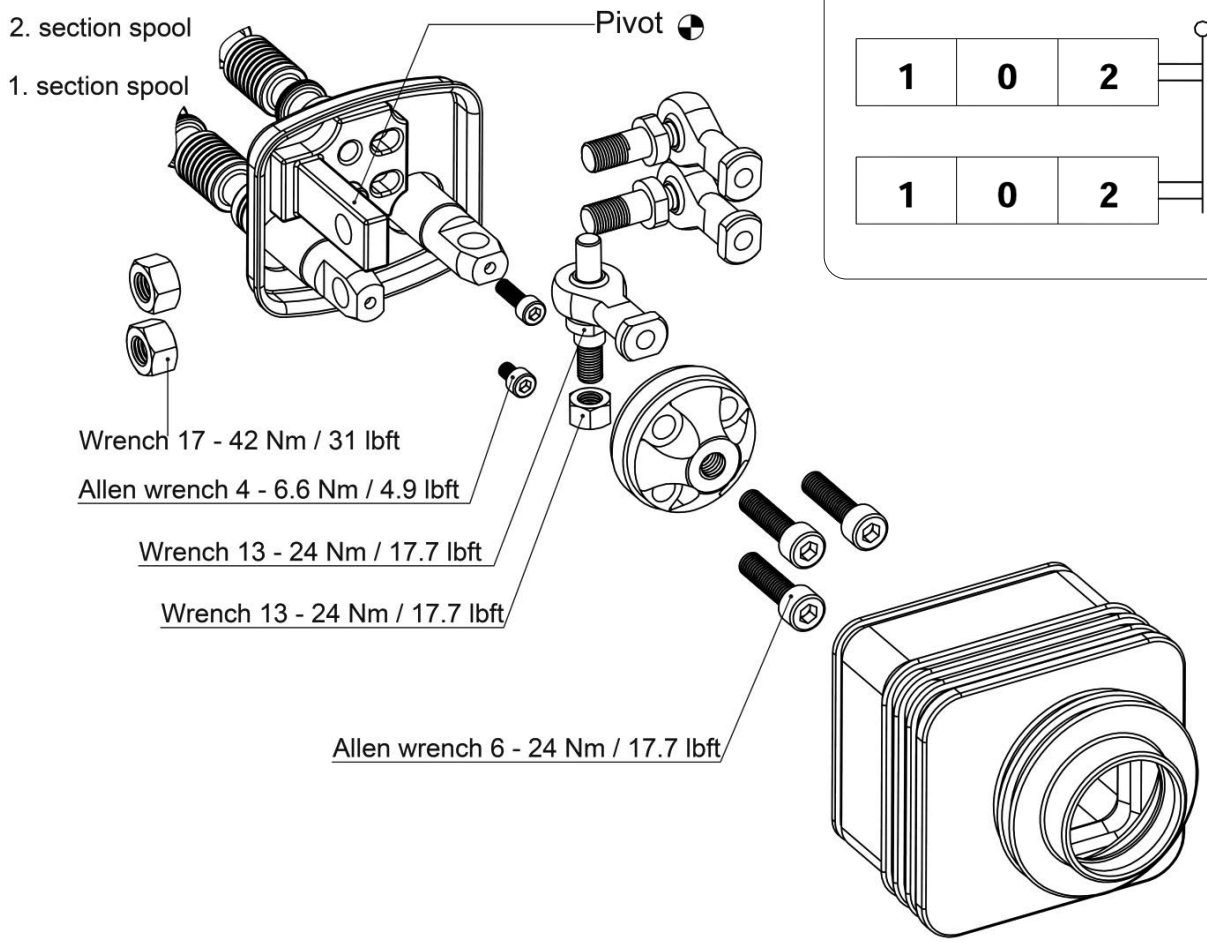

Operation Angle:

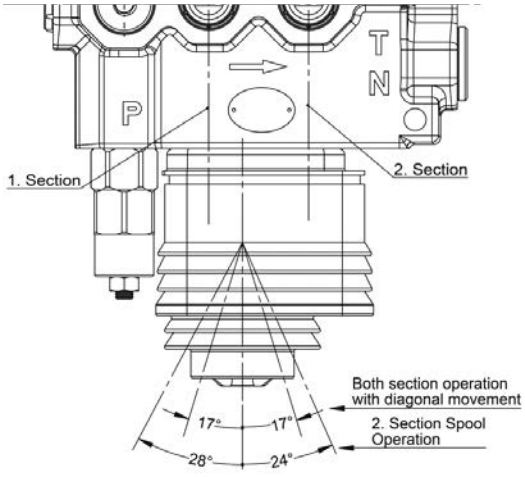

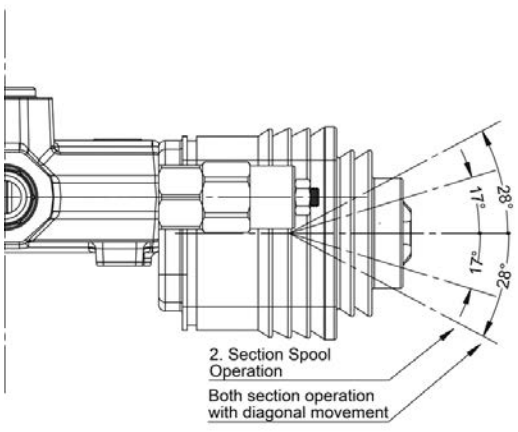

SPOOL POSITIONERS – SIDE OF LEVER CONTROL

Lever Controls - Joystick

Dimensions and movement sceme

Type No: **JL1** — **Application:** Pivot placed down on the Left

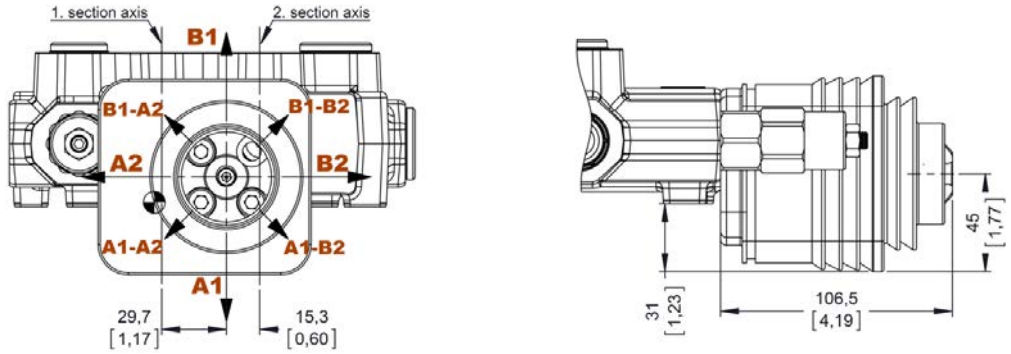

Type No: **JL2** — **Application:** Pivot placed down on the right

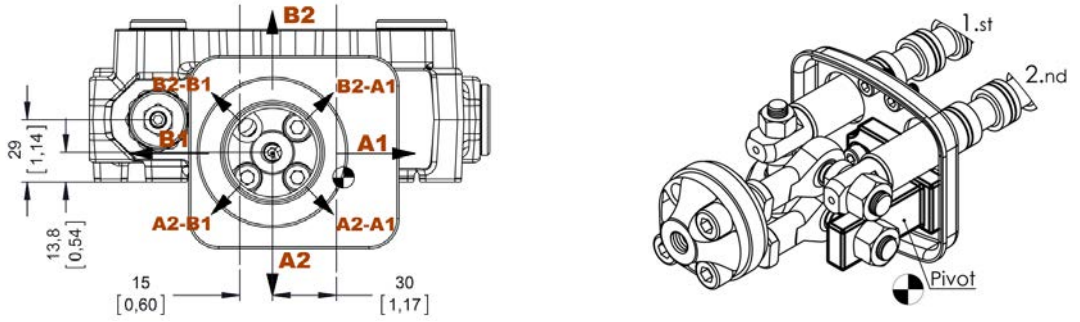

Type No: **JL3** — **Application:** Pivot placed above on the Left

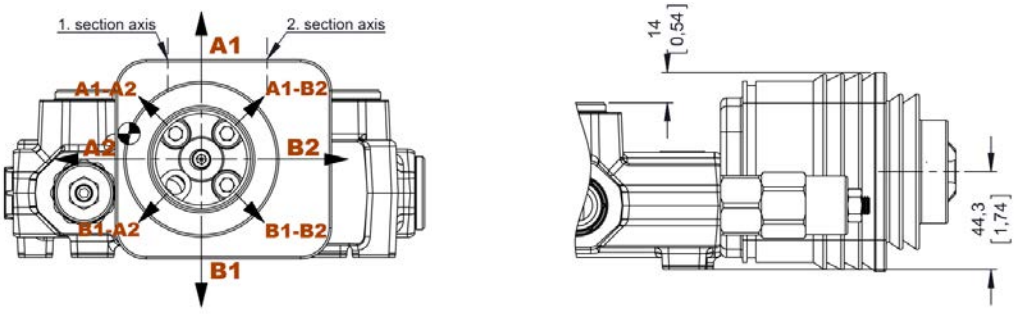

Type No: **JL4** — **Application:** Pivot placed above on the right

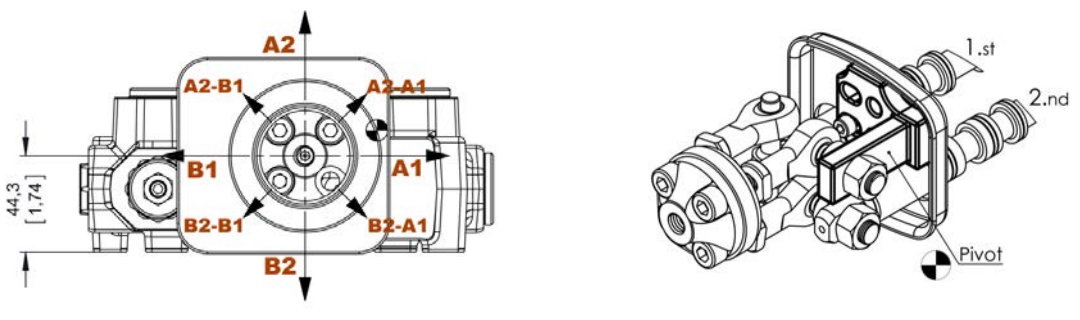

SPOOL POSITIONERS – SIDE OF LEVER CONTROL

Lever Controls - Cable Control

Kit No: **HL**

Exploded View | Diagram

Waterproof cap prearranged for remote control with flexible cable.

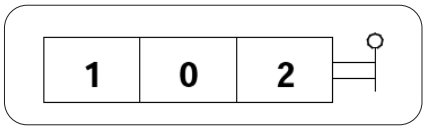

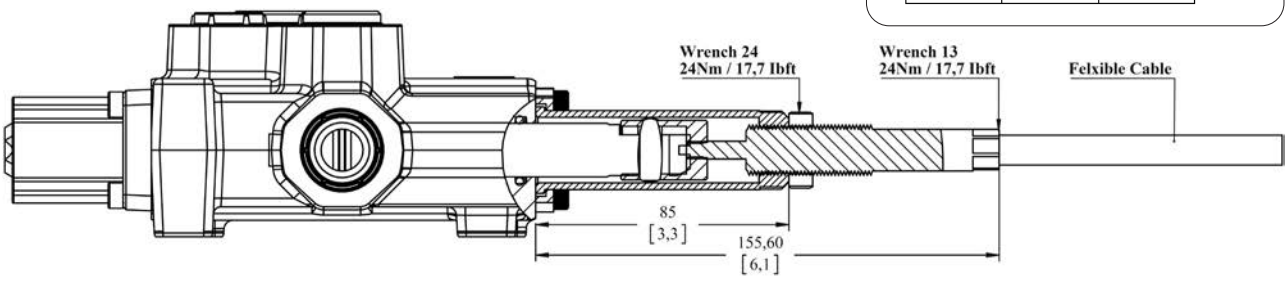

Note: Remote cable control is several options. Please indicte the cable length demanded and contact our sales department. Standart cable length 1m- 2m- 3m- 4m- 5 meter.

Example Operation

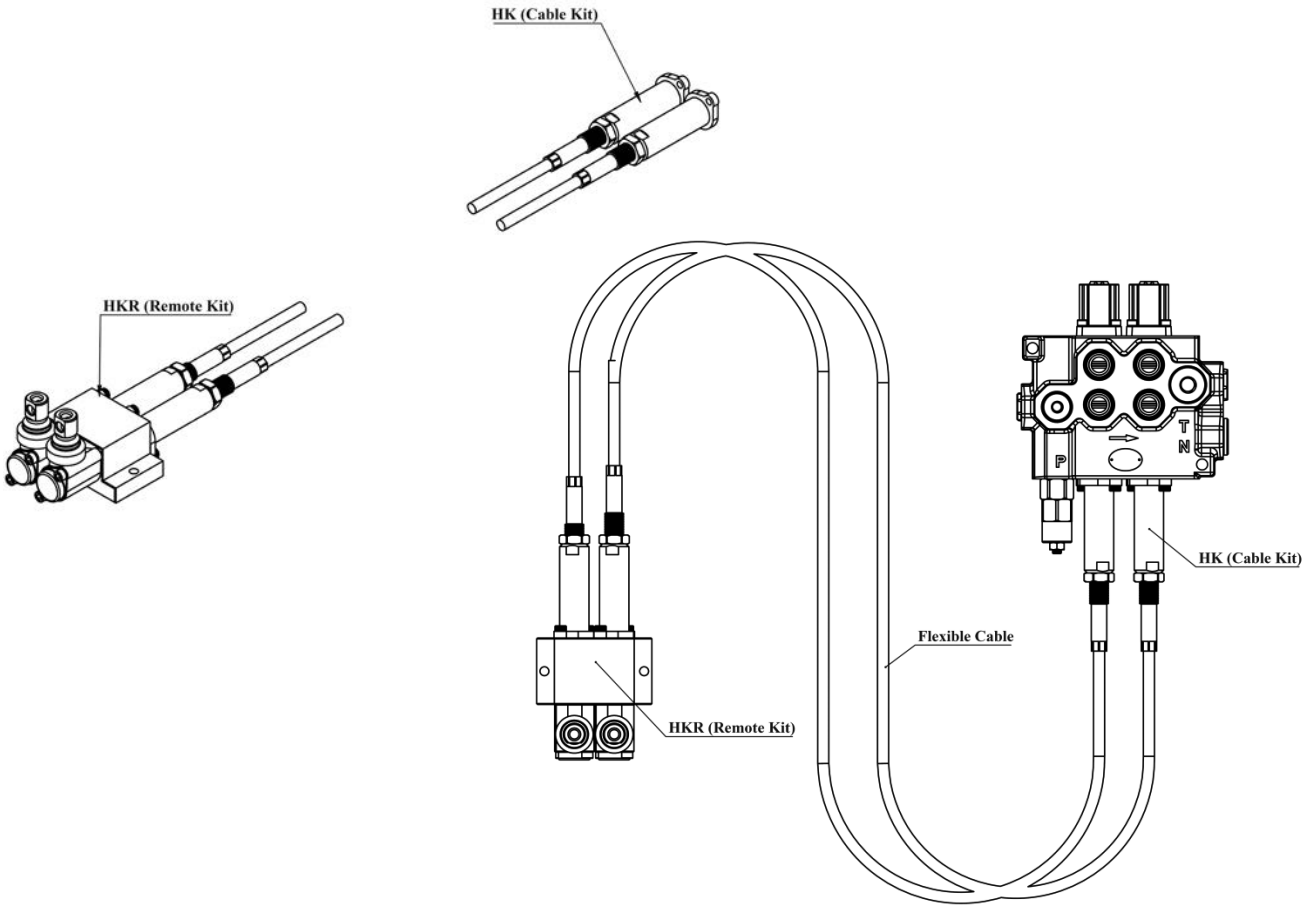

COMPLETE CONTROL – ON / OFF SOLENOID CONTROL

ON/OFF Solenoid Control

Kit No: **SEC**

Sectional Appearance

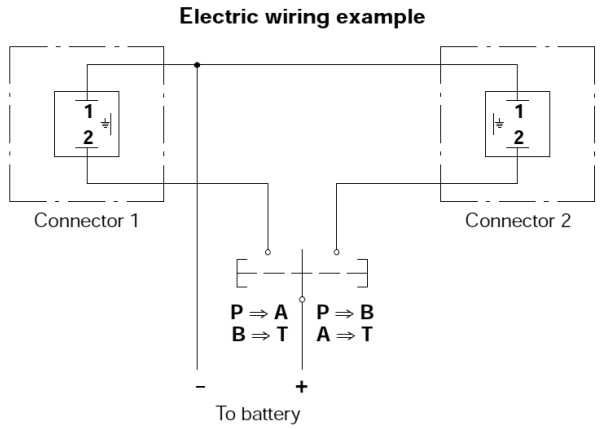

Diagram

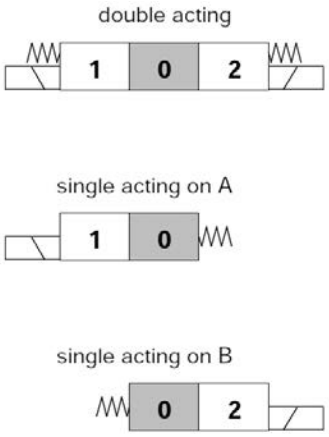

Operating Features

Max Working Pressure.....: 230 Bar / 3300 Psi
Max back pressure .....: 5 Bar / 80 Psi
Internal Lekage.....: 10 cm3 / min

Selenoid Operating Features

Nominal voltage.....: 12 VDC / 24 VDC
Power rating.....: 36 W
Duty cycle.....: %100
Nominal voltage tolerance.....: ±10
Coil insulation .....: Class H
Stroke.....: ±3

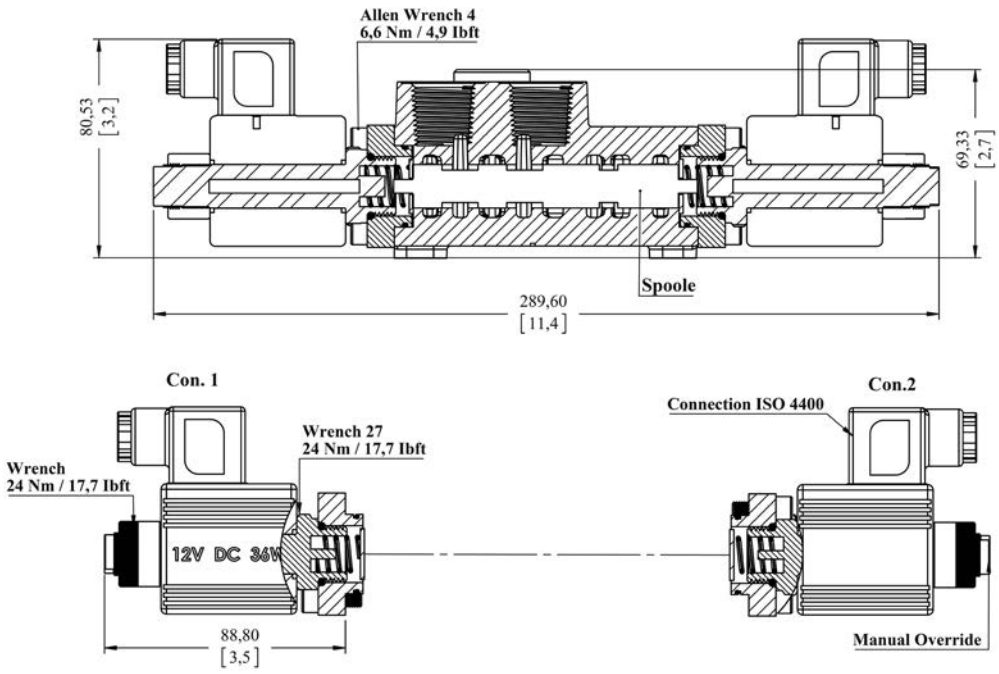

OUTLET PORT OPTIONS

Carry - Over Connection

Kit No: **CO**

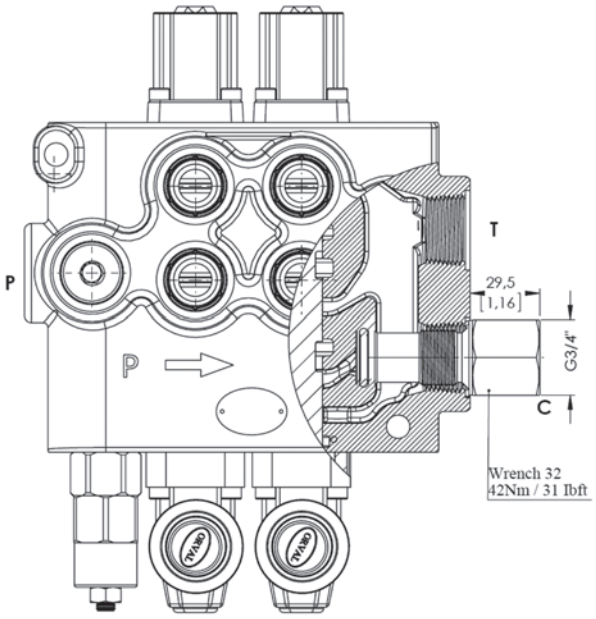

Sectional Appearance

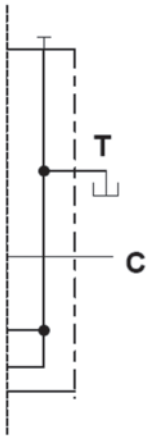

Hydraulic Circuit

Code: ORV M100-2P / SMR2-120 / 1A-SR-STL/1A-SR-STL/CO-PA1/SGT

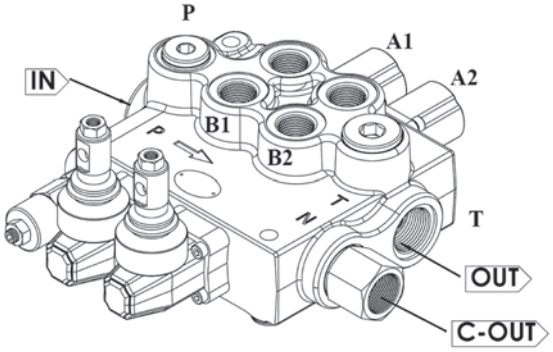

Direction of Port Connectted

SGT : See page 5 for Standard center

OUTLET PORT OPTIONS

Closed Center

Kit No: **CS**

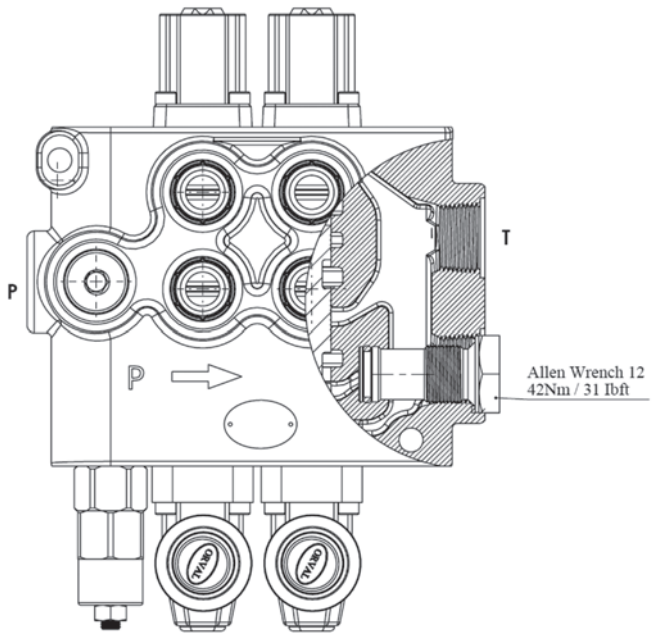

Sectional Appearance

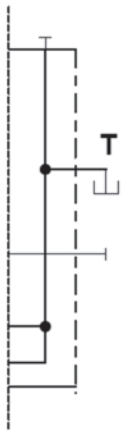

Hydraulic Circuit

Code: ORV M100-2P / SMR2-120 / 1A-SR-STL/1A-SR-STL/CT-PA1/SGT

INSTALLATION AND MAINTENANCE

The ORV M100 valve is assembled and tested as per the technical specification of this catalog. Before the final installation on your equipment, follow the below recommendation:

• The valve can be assembled in any position, in order to prevent body deformation and spool sticking mount the product on a flat surface;

• In order to prevent the possibility of water entering the lever box and spool control kit, do not use high pressure wash down directly on the valve;

• Before painting, ensure plastic port plugs are tightly in place.

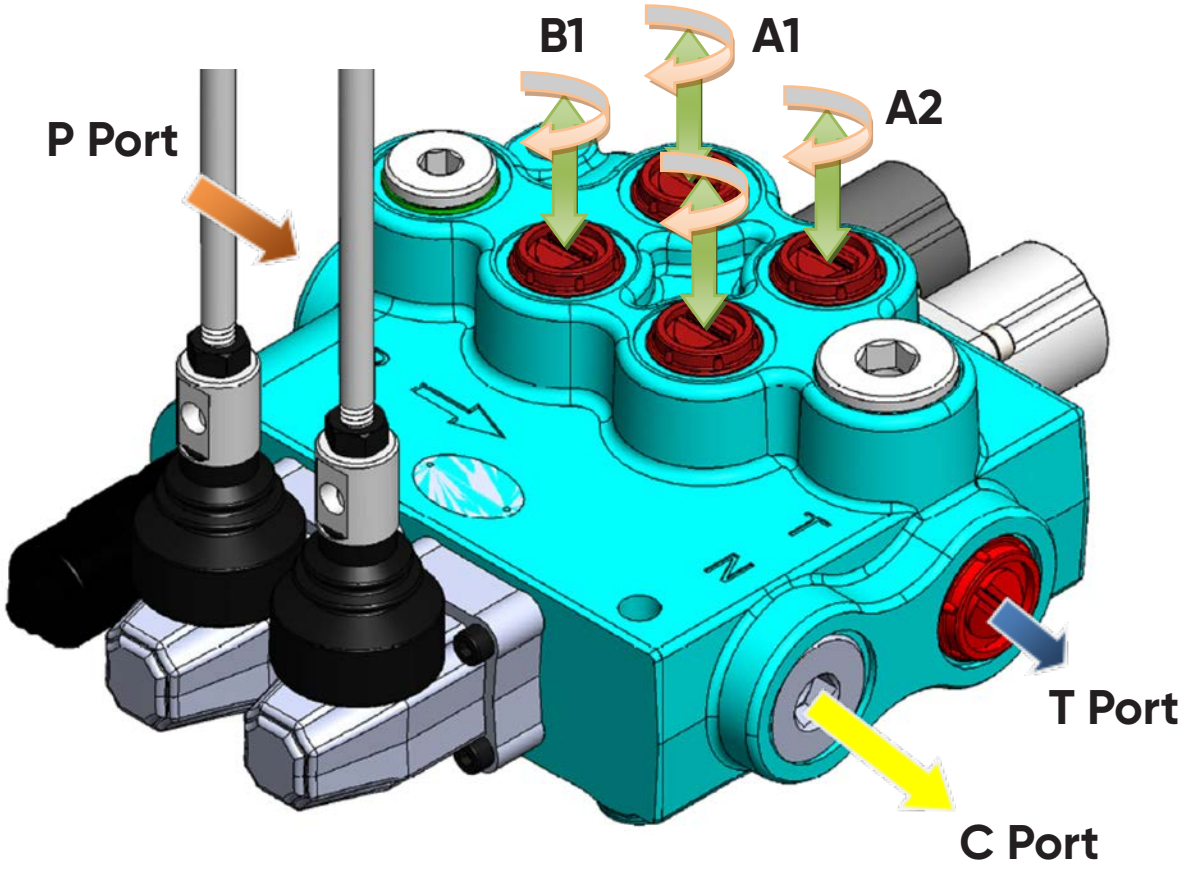

Threads Type (Nm / lbft)	P Port	A and B Port	T and C Port
BSP (ISO 228/1)	G 1/2	G 1/2	G 3/4
With O--Ring seal	50 / 36.9	50 / 36.9	70 / 51.6
With copper washer	60 / 44.3	60 / 44.3	70 / 51.6
With steel and rubber washer	60 / 44.3	60 / 44.3	70 / 51.6
BSP (ISO 228/1)	G 3/4	G 3/4	G 3/4
With O--Ring seal	70 / 51.6	70 / 51.6	70 / 51.6
With copper washer	70 / 51.6	70 / 51.6	70 / 51.6
With steel and rubber washer	70 / 51.6	70 / 51.6	70 / 51.6
UN--UNF (ISO 11926--1)	11/16--12 UNF--2B	9/16--18 UNF--2B	11/16--12 UNF--2B
With O--Ring seal	95 / 70	30 / 22.1	95 / 70
METRIC (ISO 262)	M27 x 2	M22 x 1.5	M27 x 2
With O--Ring seal	100 / 73.8	50 / 36.9	100 / 73.8
With copper washer	100 / 73.8	60 / 44.3	100 / 73.8
With steel and rubber washer	100 / 73.8	60 / 44.3	100 / 73.8

TECHNICAL DATA

Ports Dimensional Data

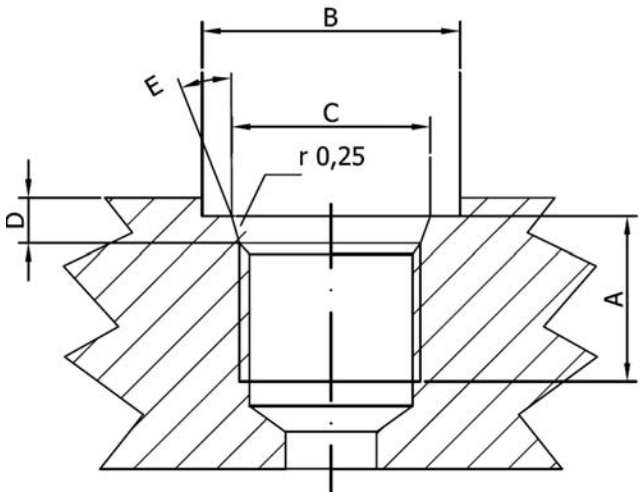

SAE UN-UNF (ISO 725)						
Dimensions		7/8-14 UNF SAE10		1"1/16-12 UN SAE12		1"5/16-12 UN SAE16	
mm	in						
A		17	0,67	20	0,79	20	0,79
B		34	1,34	41	1,61	49	1,92
C		23,9	0,94	29,2	1,15	35,5	1,40
D		2,5	0,10	3,3	0,13	3,3	0,13
E		15°		15°		15°	

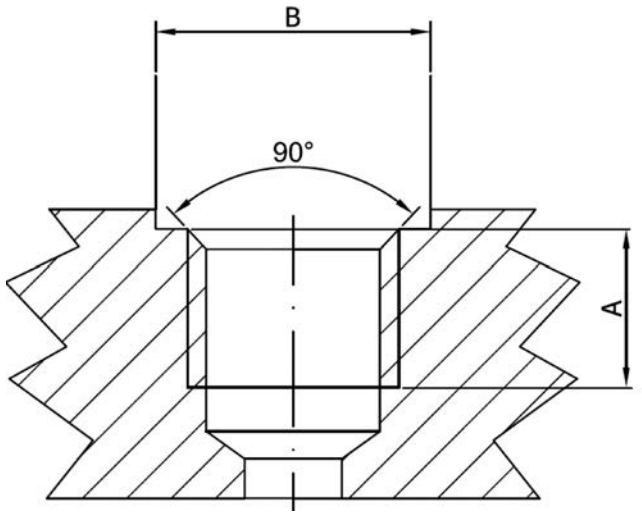

BSP (ISO 228)						
Dimensions		G 1/2"		G 3/4		G1	
mm	in						
A		16	0,63	18	0,71	20	0,79
B		27	1,06	33	1,30	40	1,57

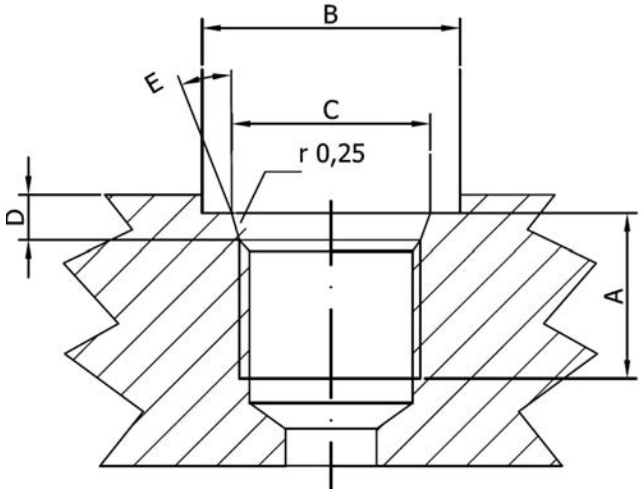

METRIC (ISO 262)					
Dimensions		M22x1,5 ISO 262		M27x2 ISO 262	
mm	in				
A		16	0,63	18	0,71
B		31,5	1,24	37,7	1,48

ORVAL HYDRAULIC

SECTIONAL
VALVES

ORV-PD45

CE

TÜV International Certification
TÜV THÜRINGEN CERT AZAV 15 190 17185 TIC





CONTENTS

Working Conditions	3
Dimensional Data	3
Hydraulic Circuit	3
Performance Data And Curve	3
Inlet Relief Options	3
Ordering Codes	3
Spool Options	3
Spool Positioners – Side of Return	3
Working Section Kit	3
Spool Positioners – Side of Lever Control	3
Spool Positioners – Side of Lever Control	3
Spool Positioners – Side of Lever Control	3
Spool Positioners – Side of Lever Control	3
Complete Control – On / Off Solenoid Control	3
Outlet Cover- Tank Side	3
Port Valves Options	3
Installation and Maintenance	3
Technical Data	3

Additional Informations

Note: This catalog shows the product in the most standard configurations. For Other Configurations, more detailed information or special request, Please contact Customer Service Dpt.

Warning!: All specifications of this catalog refer to the standard product at this date (01/2020). ORVAL, oriented to a continuous improvement, reserves the right to discontinue, modify or revise the specifications, without notice.

ORVAL IS NOT RESPONSIBLE FOR ANY DAMAGE CAUSED BY AN INCORRECT USE OF THE PRODUCT.

WORKING CONDITIONS

Nominal Flow Rating / Displacement	45 l/min	12 U.S.G.P.M
Maximum Working Pressure (Series Circuit)	210 Bar	3050 PSI
Maximum Working Pressure (Parallel Circuit)	315 Bar	4600 PSI
Max. Back Pressure	25 Bar	360 PSI
Oil Temperature with NBR Seals	-20 to 80 C°	-4 to 176 F °
with FPM (Viton) Seals	-20 to 100 C°	-4 to 212 F °
Oil Viscosity – Operating Range	From 10 to 75 mm2/s	From 10 to 75 cSt
Minumum / Maximum	10 / 400 mm2/s	10 / 400 cSt
Oil Filtration	≤30 µ	
Ambiant Temperature Range	-35 to 60 C°	-31 to 140 F °
Number Of Spools	1 to 12	
Internal Leakage (at 100 bar (1450 PSI), 40C° (110 F°), 46 cSt – A(B)–T)	3 cm3/min	0,18 in3/min
Max. Level Of Contamination	19/16 - ISO 4406	
Tie rod tightening torque	30 Nm	22 lbft

Not: This catalogue shows technical specifications measured with mineral oil of 46 mm2/s-46 cSt viscosity at 40 C° temparture.

Features

• Simple, compact and heavy duty designed sectional valves from 1 to 12 sections for open and closed center hydraulic systems.
• Optionaly Carry-Over port only tandem circuit.
• Fitted with a main pressure relief valve.
• Interchangeable spool diametre is 16 mm – 0,63 in.
• Available manual, pneumatic, hydraulic and electro-pneumatic spool control kits.

DIMENSIONAL DATA

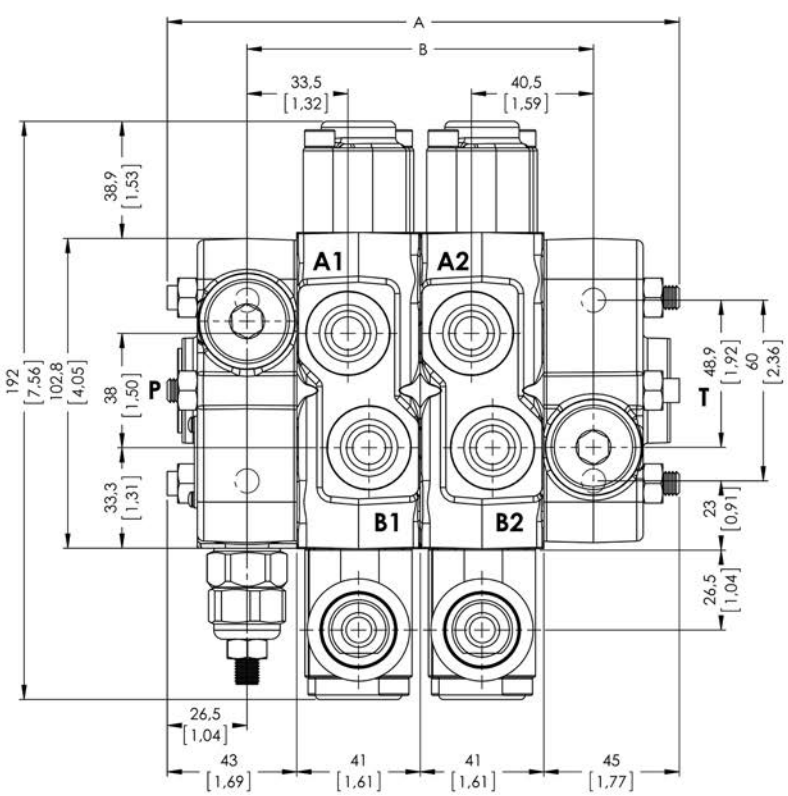

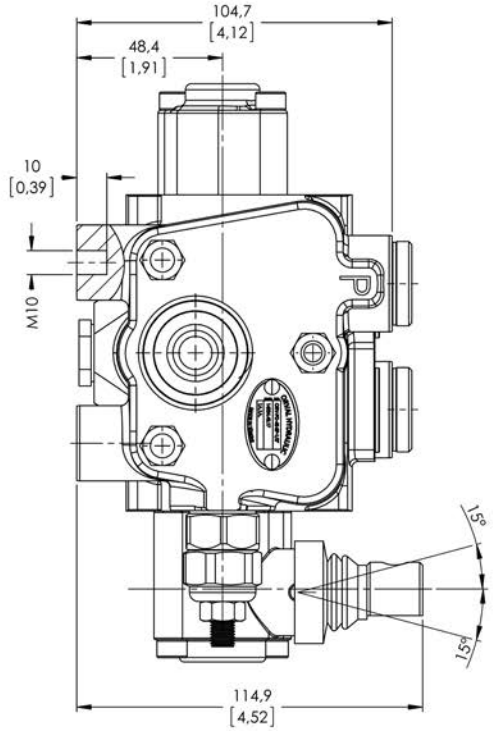

TYPE	A		B		Weight	
	mm	in	mm	in	Kg	lb
ORV- PD45-1P	129	5,08	74	2,91	5,9	13,01
ORV- PD45-2P	170	6,69	115	4,53	8,35	18,41
ORV- PD45-3P	211	8,31	156	6,14	10,8	23,81
ORV- PD45-4P	252	9,92	197	7,76	13,25	29,22
ORV- PD45-5P	293	11,54	238	9,37	15,7	34,62
ORV- PD45-6P	334	13,15	279	10,98	18,15	40,02
ORV- PD45-7P	375	14,76	320	12,60	20,6	45,42
ORV- PD45-8P	416	16,38	361	14,21	23,05	50,83
ORV- PD45-9P	457	17,99	402	15,83	25,5	56,23
ORV- PD45-10P	498	19,61	443	17,44	27,95	61,63
ORV- PD45-11P	539	21,22	484	19,06	30,4	67,03
ORV- PD45-12P	580	22,83	525	20,67	32,85	72,43

STANDARD THREADS

PORT	BSP (Iso 228) 3/8" Series	BSP (Iso 228) ½"Series	UN-UNF (Iso 11926-1)	Metric (Iso 262)
P Inlet	G 3/8	G 1/2	3/4-16 UNF	M18x1.5
A-B Ports	G 3/8	G 1/2	9/16-18 UNF	M18x1.5
T Outlet	G 1/2	G 1/2	3/4-16 UNF	M18x1.5
Pneumatic	G 1/4	G 1/4	NPTF 1/8 - 27	NPTF 1/8 - 27
Carry-Over	G 1/4	G 1/4	G 1/4	G 1/4

HYDRAULIC CIRCUIT

Parallel

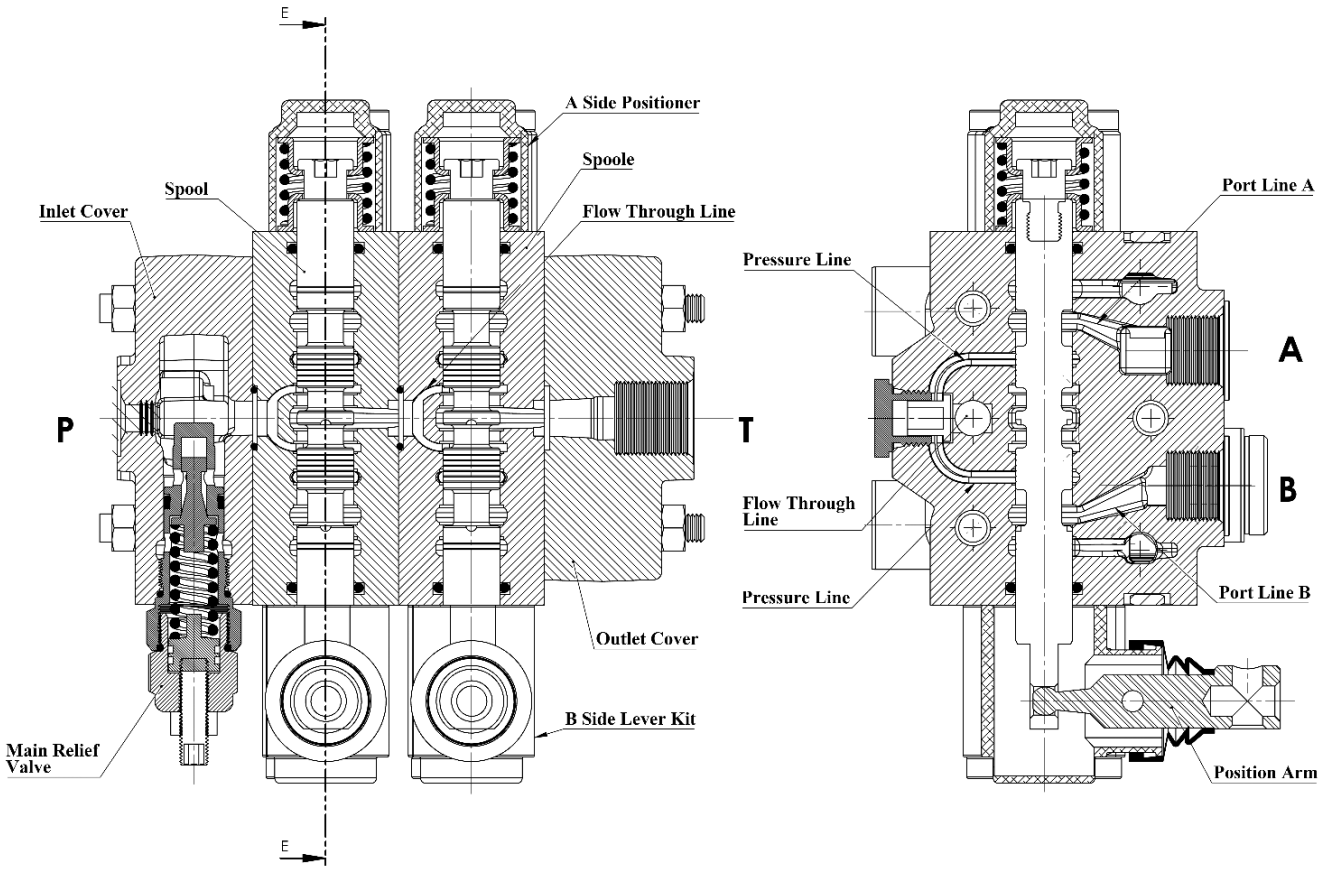

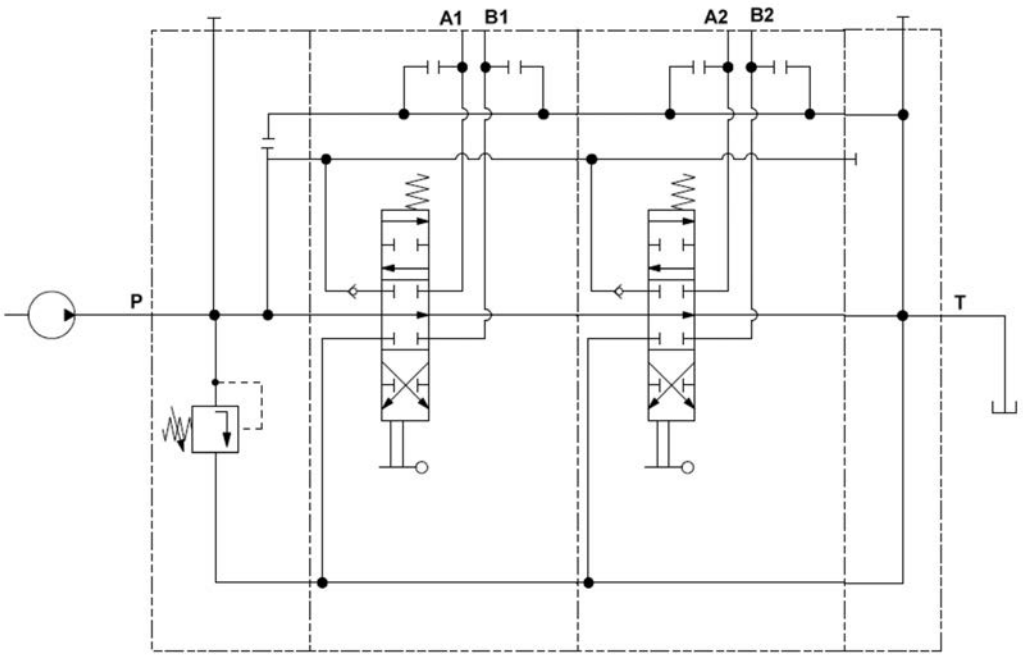

Code: ORV PD45-2P (SD(LA)-SMR2-125-PP)/P-1A-STL-SR/ P-1A-STL-SR/ SO-PT1 / SGT

HYDRAULIC CIRCUIT

Inlet Cover – Pump Side

SD - Side inlet with direct pressure relief valve
TD - Top inlet with direct pressure relief valve

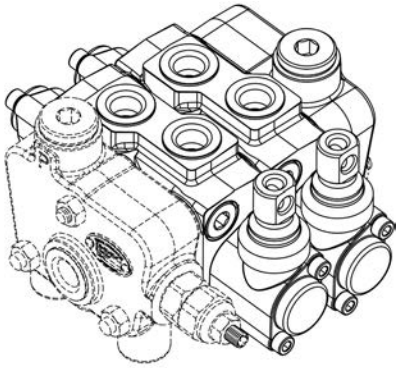

Type = SD

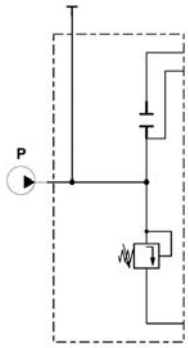

Type = TD

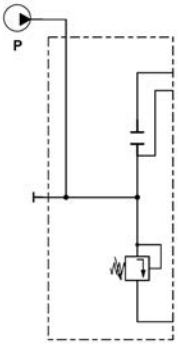

Working Sections

P – Parallel

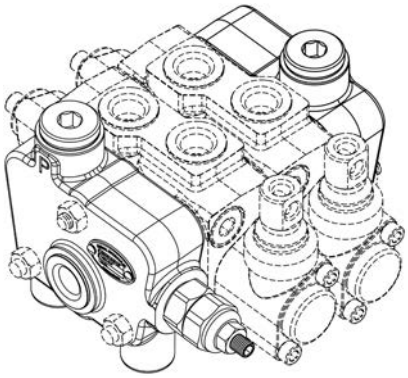

Type = P

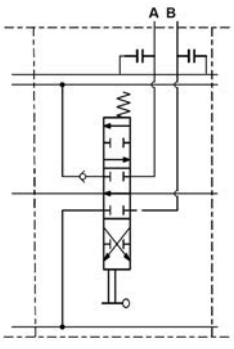

HYDRAULIC CIRCUIT

Outlet Cover (Tank Side)

SO - Side outlet
TO - Top outlet
TCO - Top outlet with carry-over
TC - Top outlet with closed centre

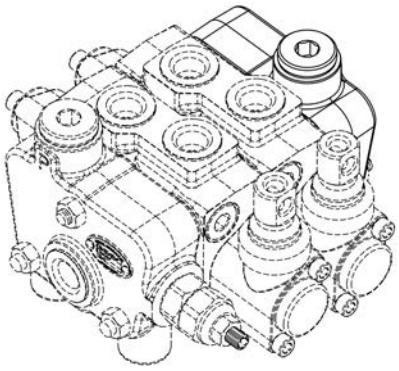

Type = SO

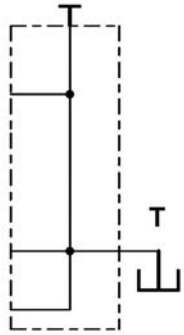

Type = TO

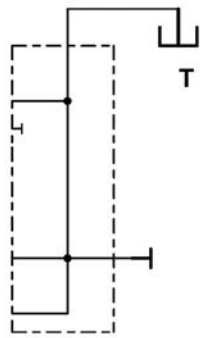

Type = TCO

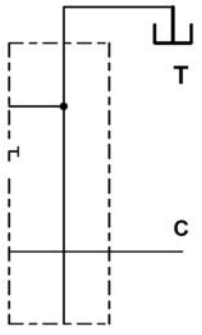

Type = TC

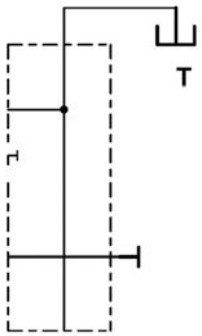

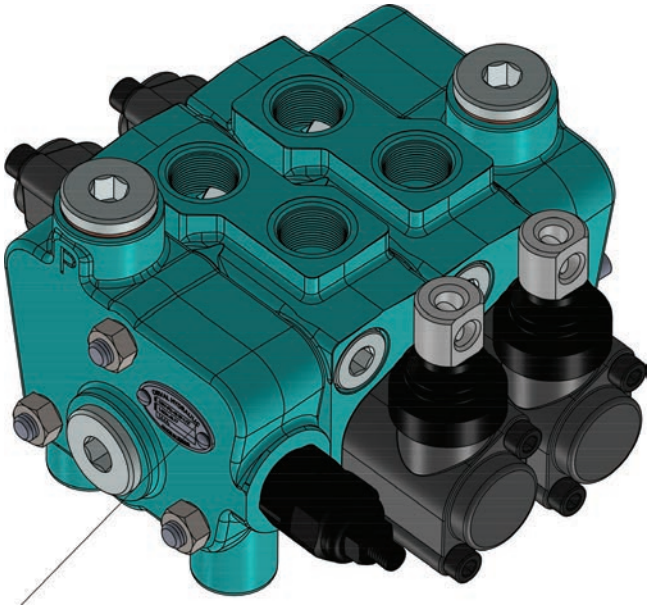

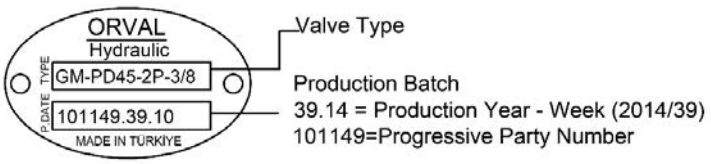

PERFORMANCE DATA AND CURVE

Open Center - Pressure Drop (P-T)

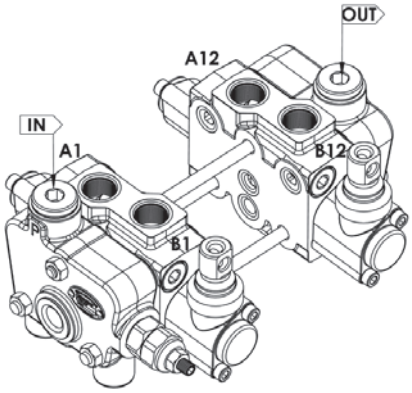

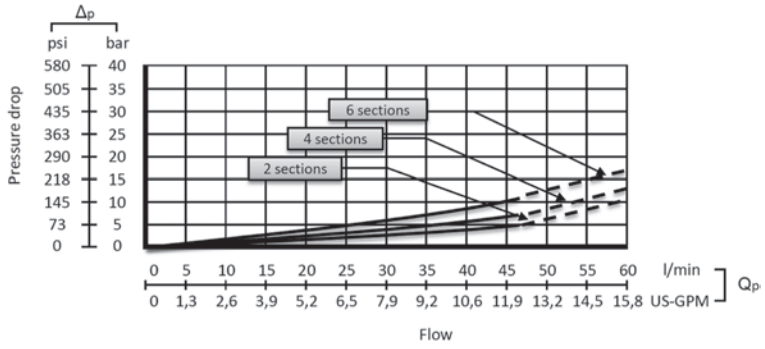

Inlet to Work Port - Pressure Drop (P-A/B)

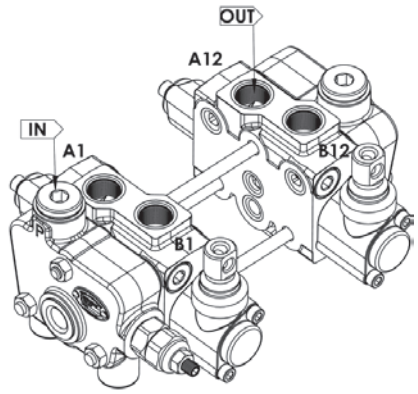

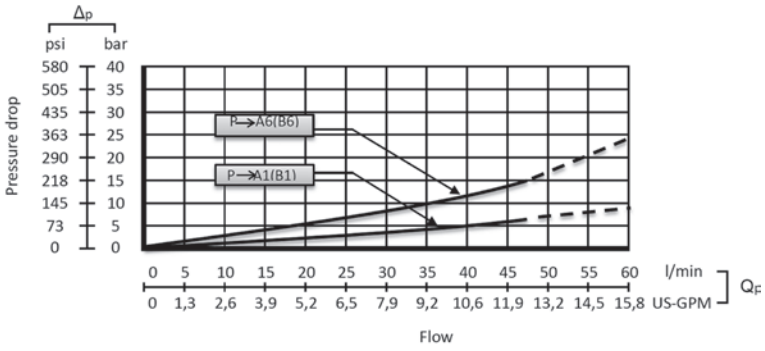

Work Port to Outlet - Pressure Drop (A/B-T)

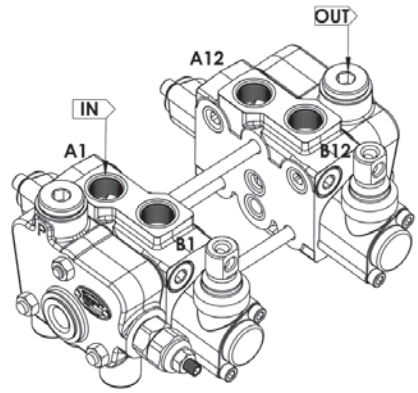

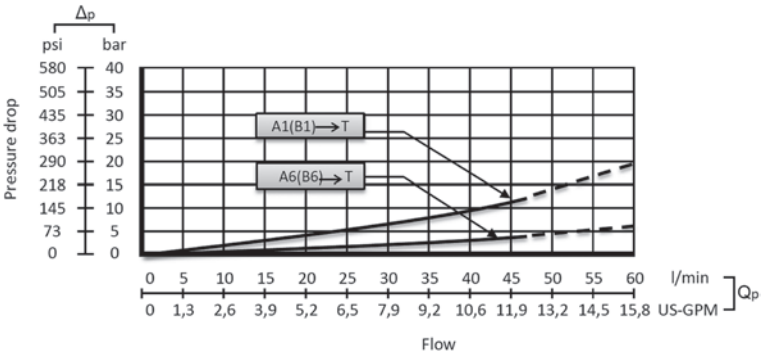

INLET RELIEF OPTIONS

Direct Pressure Relief Valve

Code:

SMR2 – 125

- **Pressure Setting Bar in (Standard 125 bar)**
- **Standard Main Relief Spring Type -2**

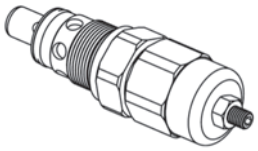



Performance Data

Spring Type Number: 3
Setting= 220 Bar -Range=160-315

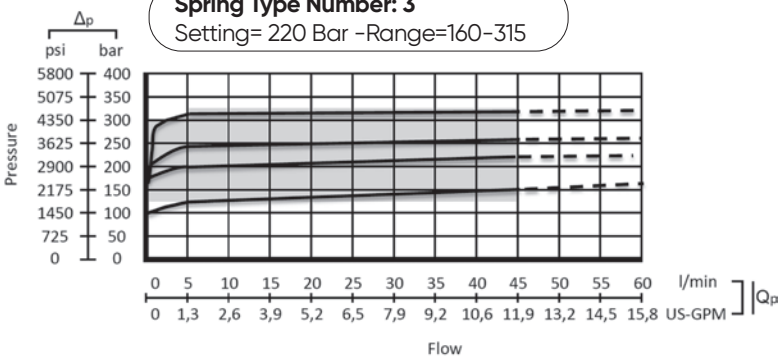

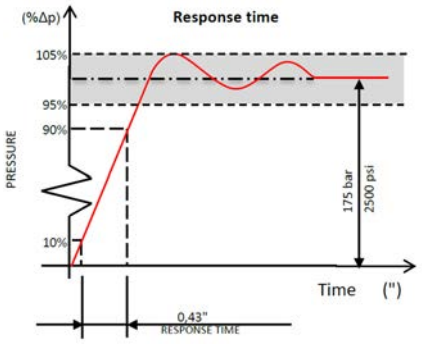

Adjustment Type on Valve

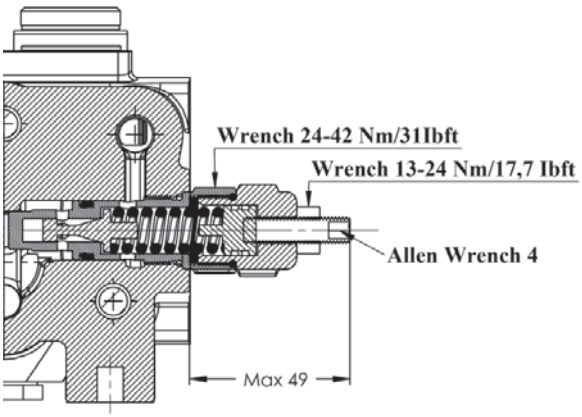

Relief Blanking Plug - WM

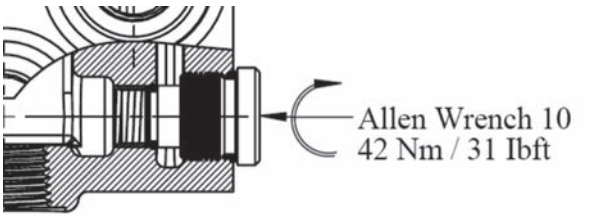

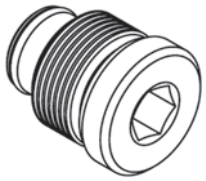



ORDERING CODES

Order Example

					2.2		2.4					3.2	
ORV PD45-2P	(SD-SMR2-125-PP)	/	P-1A-	STL-	YAC-SR	/	P-1A-STL-45P	/	SO-PT1-CO	/	SGT		
	1	1.2	1.4		2.1	2.3	2.6					3.1	3.3
Base Code "0"					1 st Section				Following Section			Output Section	

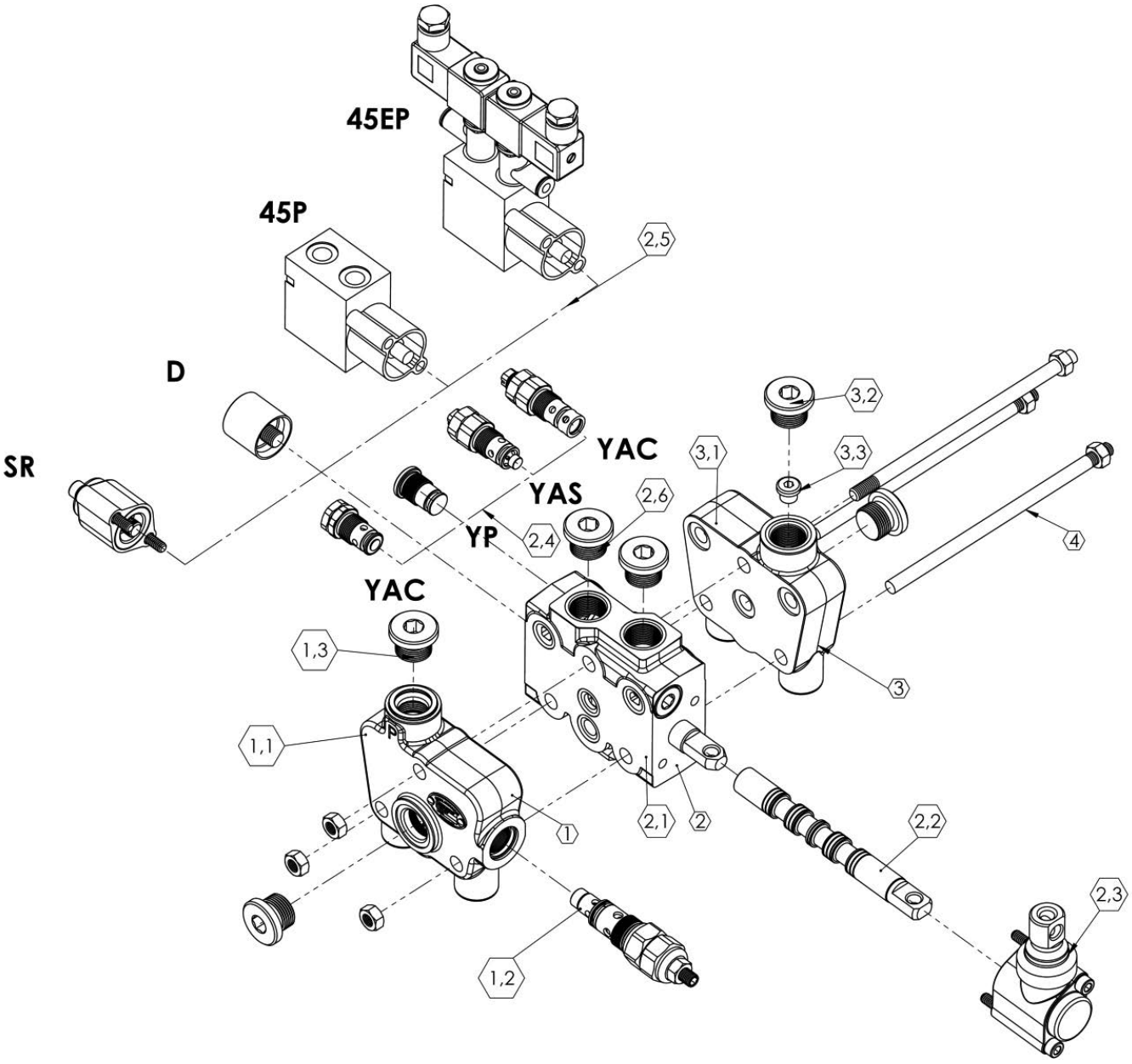

ORDERING CODES

1- Inlet Section

ORV PD45-2P PD45 = Valve Type-(PD)- Sectional
(45) - Max. Flow Rate
2P = Sections Quantity
SD = Side inlet with direct pressure relief valve (1SD45100)
TD = Top inlet with direct pressure relief valve (1TD45100)

2- Working Section

P = Parallel (2P45100)

3- Output Section

SO = Side outlet (3SO45100)
TO = Top outlet (3TO45100)
TCO = Top outlet with carry-over (3TCO45100)
TC = Top outlet with closed centre (3TC45100

4- Assembling Kit

Tie rod kit for 1 section valve - (4TRK145100)
Tie rod kit for 2 section valve - (4TRK245100)
Tie rod kit for 3 section valve - (4TRK345100)
Tie rod kit for 4 section valve - (4TRK445100)
Tie rod kit for 5 section valve - (4TRK545100)
Tie rod kit for 6 section valve - (4TRK645100)
Tie rod kit for 7 section valve - (4TRK745100)
Tie rod kit for 8 section valve - (4TRK845100)
Tie rod kit for 9 section valve - (4TRK945100)
Tie rod kit for 10 section valve - (4TRK1045100)
Tie rod kit for 11 section valve - (4TRK1145100)
Tie rod kit for 12 section valve - (4TRK1245100)

5-6- O_Ring Kit

5. -17.00x2.65 NBR 70 SH O-Ring seal (3 Qty.) (5MK45100)
6. -22.40x2.65 NBR 70 SH O-Ring seal (1 Qty.) (6MK45100)

1.*-Inlet Options

1.1 Inlet Cover
Body = Standard (11BS45100)
1.2 Inlet Relief
SMR1-080 – (12SMR145080)–Range 63-125 bar
Setting 80 bar
SMR2-125 – (12SMR245125)–Range 100-160 bar
Setting 125 bar
SMR3-175 – (12SMR345175)–Range 125-250 bar
Setting 175 bar
SMR4-220 – (12SMR445220)–Range 200-315 bar
Setting 220 bar
1.3 Ports Plug
PA1 =G1/2 Top and side input - (13PA045100)
PA2= G1/2 Top and side input –(13PA245100)

2.*- Working Options

2.1 Working Section
PA = Without ports valve prearrangement, with parallel circuit - Body (21BSPA45100)
2.2 Spool Options
1A - (22SS45110) – 3 Positions, Double acting
2A - (22SS45120) – 3 Positions, Double acting
A to tank B Blocked
3A - (22SS45130) – 3 Positions, Double acting
B to tank A blocked
4A - (22SS45140) – 3 Positions, Double acting
A and B tank
5A - (22SS45150) – 3 Positions, Single acting on
A (A to tank)
6A - (22SS45160) – 3 Positions, Single acting on
B (B to tank)
2.3 Lever Options
L =Standard HandLever (L=120mmxM8) - (7L040100)
JL=Joystick lever for two sections operation-(5JL045100)
STL=Standard Lever –(23STL80100)
HL = Remote Cable Kit – (80HL80100)
2.4 Port Relief Valves
Anti-Shock Valve
YAS (T1-50) – (24YAC45050)–Range 35-70 bar
Setting 50 bar
YAS (T1-100) – (24YAC45100)–Range 63-220 bar
Setting 100 bar
YAS (T1-200) – (24YAC45200)–Range 180-350 bar
Setting 200 bar
Anti-Shock and Anti-Cavitation Valve
YAA (T1-63) – (24YAA45063)–Range 35-70 bar
Setting 50 bar
YAA (T1-100) – (24YAA45063)–Range 63-220 bar
Setting 100 bar
YAA (T1-200) – (24YAA45063)–Range 180-350 bar
Setting 200 bar
YAC - Anti Cavitation– (24YAS45100)
YP- A and B ports valve blanking plug (24YP45100)
DST-A and B ports valve blanking plugs with
connection to tank–(24DST45100)
2.5 Ports Plug Options
PL1 =Plug for single action spool for 2A-3A, G1/2
(25PL145100)
PL2 =Plug for single action spool for 2A-3A, G3/8
(25PL245100)
2.6 Spool Positioners
SR=Spring Return in neutral position – (26SR45100)
D =Detent in position 1, neutral and 2 -(26D45100)
45P=ON/OFF Pneumatic – (2645P150100)
45EP=12 VDC ON/OFF electro-pneumatic (2645EP150112)
45EH= 12 VDC/24 VDC ON/OFF electro-hydraulic (3645EH100112)

3.*- Working Options

3.1 Working Section
Body = Standard (31BS45100)
3.2 Output Plug
PT1 =G1/2 Top and Side output (32PT145100)
3.3 Circuits Options
CO =G1/8 Carry–Over Connector (33CO45100)

INLET COVER - PUMP SIDE

LH Inlet Valve Options

Type No: **SD**

Sectional Appearance

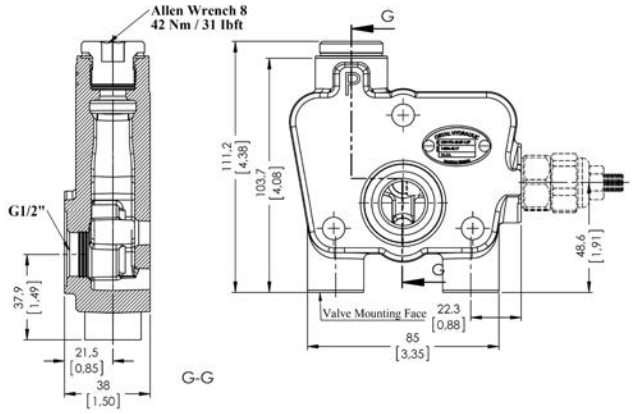

Type No: **TD**

Sectional Appearance

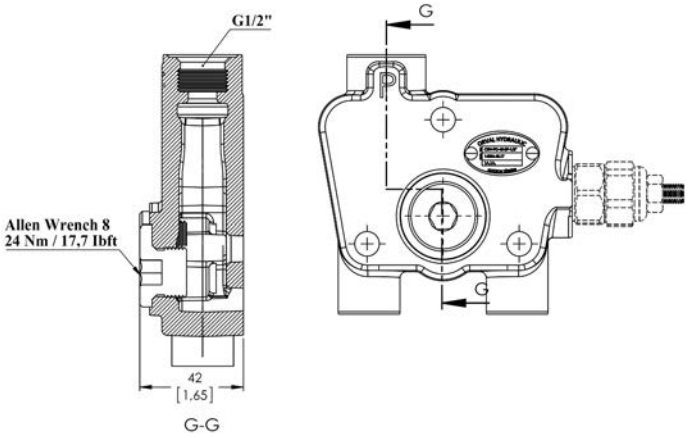

Hydraulic Diagram

Type No: **SD**

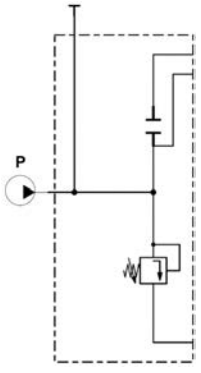

Type No: **TD**

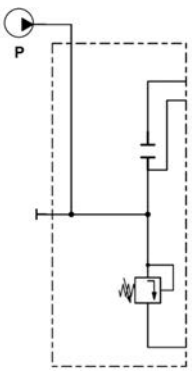

SPOOL OPTIONS

Spool Type - 1A

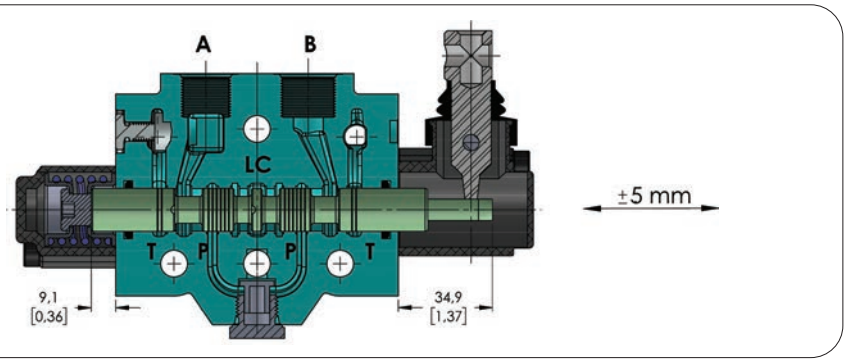

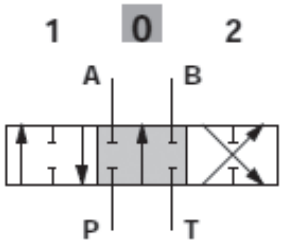

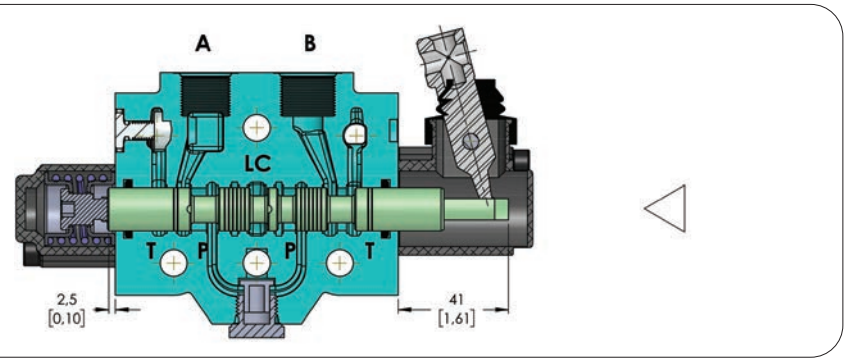

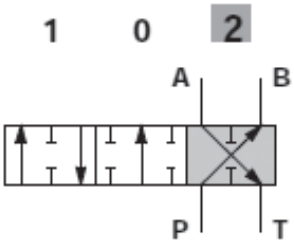

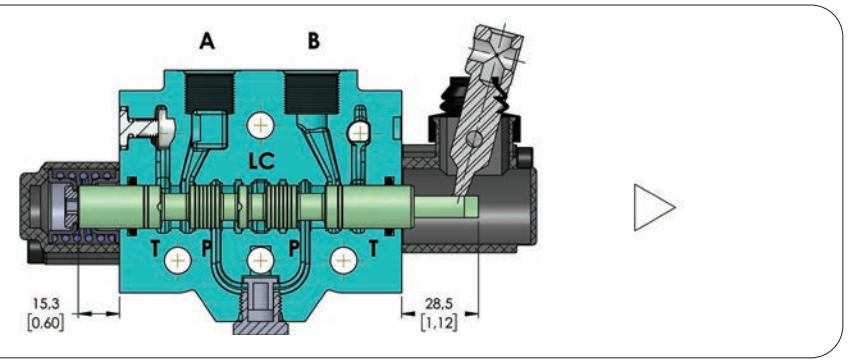

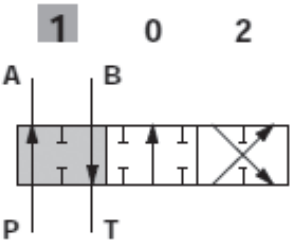

Performance Curve And Data

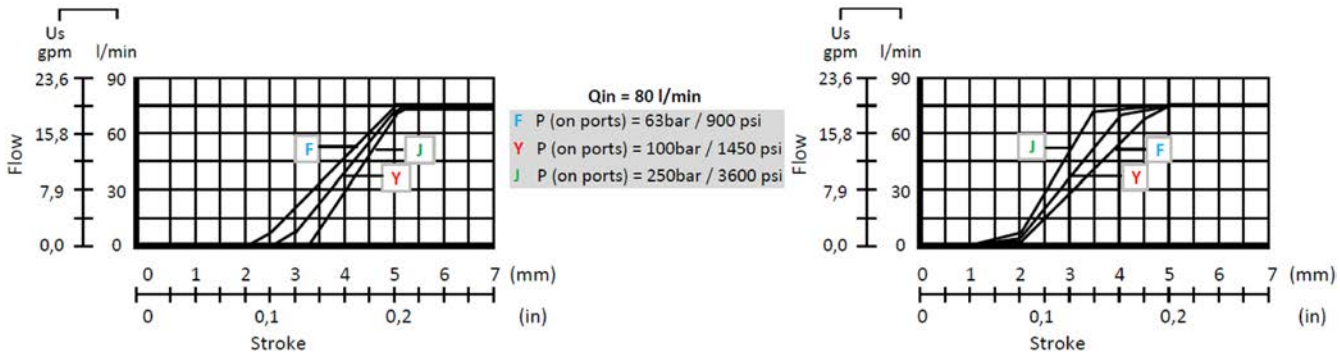

SPOOL OPTIONS

Spool Type - 2A

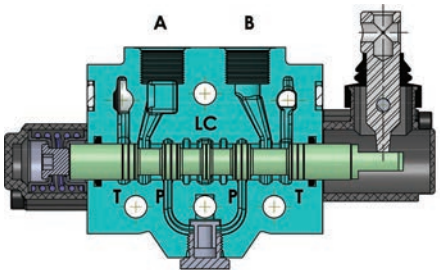

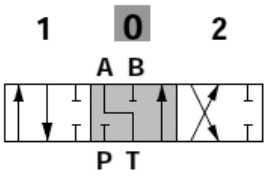

Spool Type - 3A

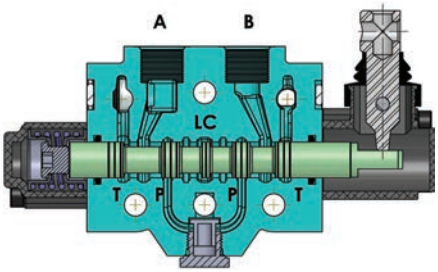

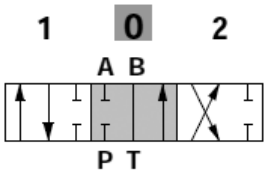

Spool Type - 4A

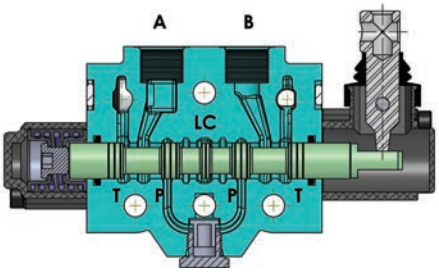

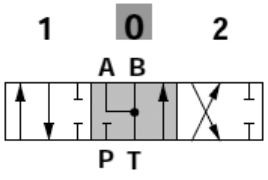

Spool Type - 5A

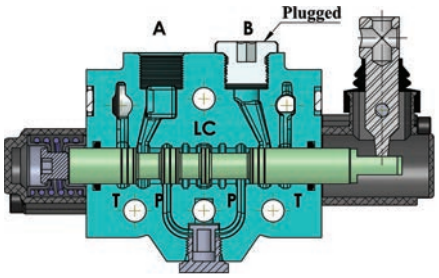

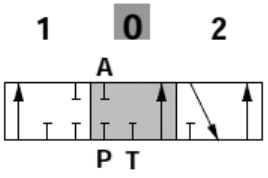

"B" port plugged

Spool Type - 6A

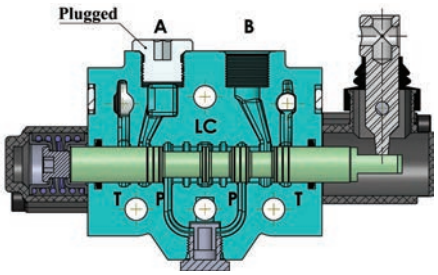

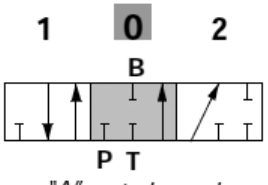

"A" port plugged

SPOOL POSITIONERS – SIDE OF RETURN

With Spring Return in Neutral Position

Kit No: **SR**

Sectional Appearance

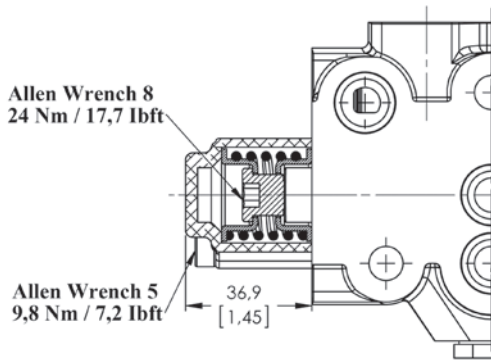

Diagram



With Detent

Kit No: **D**

Sectional Appearance

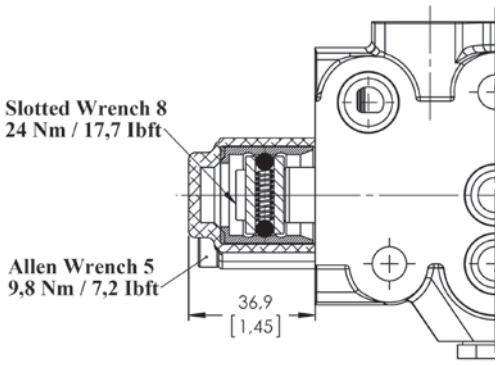

Diagram

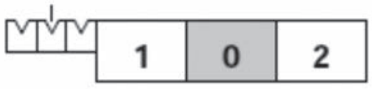

Force - stroke diagram

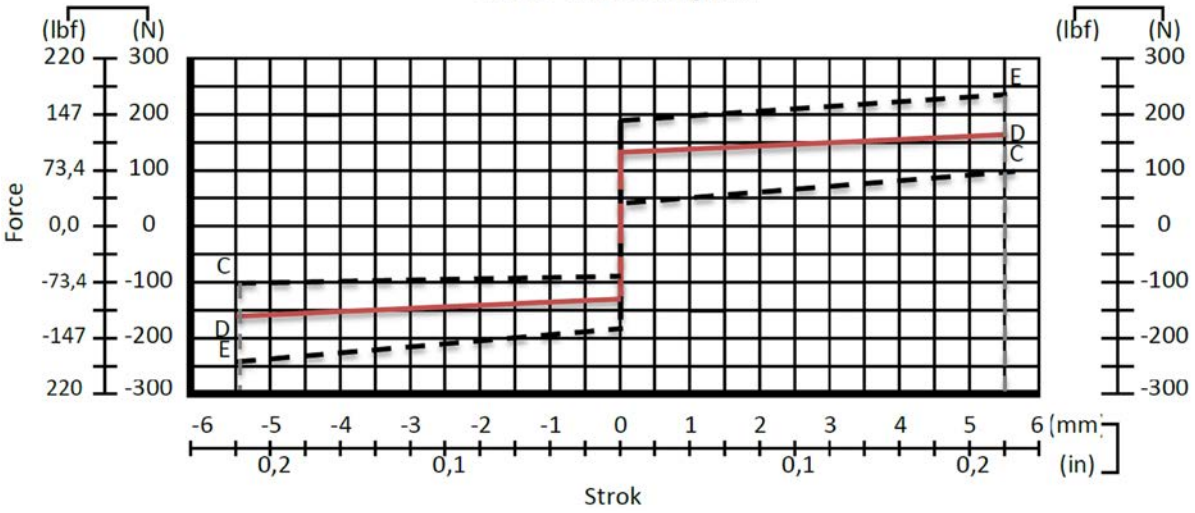

SPOOL POSITIONERS – SIDE OF RETURN

ON/OFF Pneumatic Control

Kit No: **45P**

Sectional Appearance

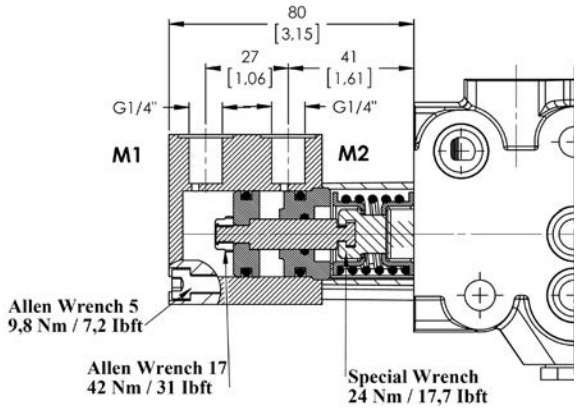

Diagram

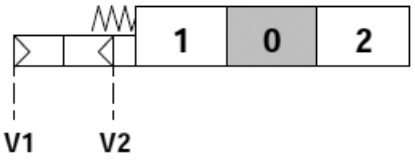

Operating Features
Pilot Pressure .....: 6 Bar (Max. 10) / 87 Psi (Max. 145)

ON/OFF Electro-Pneumatic Control

Kit No: **45EP**

Sectional Appearance

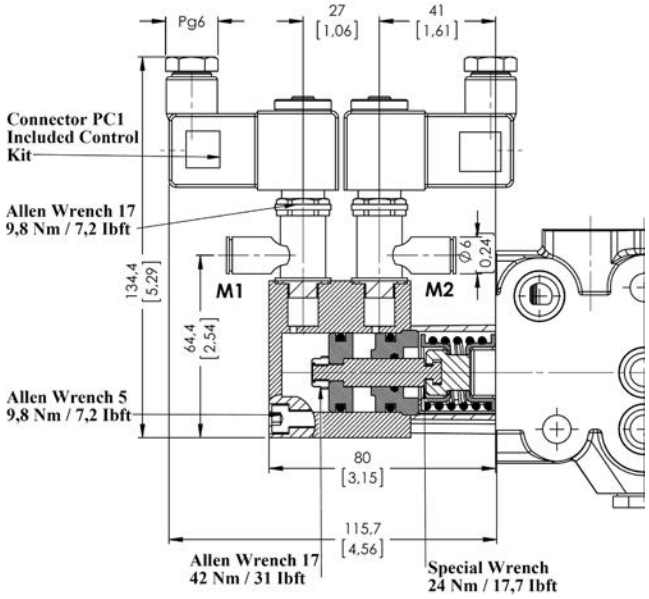

Diagram

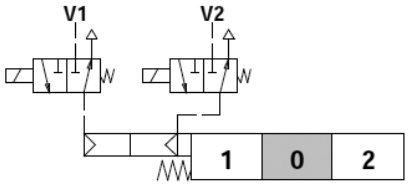

Operating Features
Pilot Pressure .....: 6 Bar (Max. 10) / 87 Psi (Max. 145)
Selenoid Operating Features
Nominal Voltage.....: 12VDC / 24 VDC
Power Rating.....: 6 W

SPOOL POSITIONERS – SIDE OF RETURN

ON/OFF Electro - Hydraulic Control

Kit No: **45EH**

Sectional Appearance

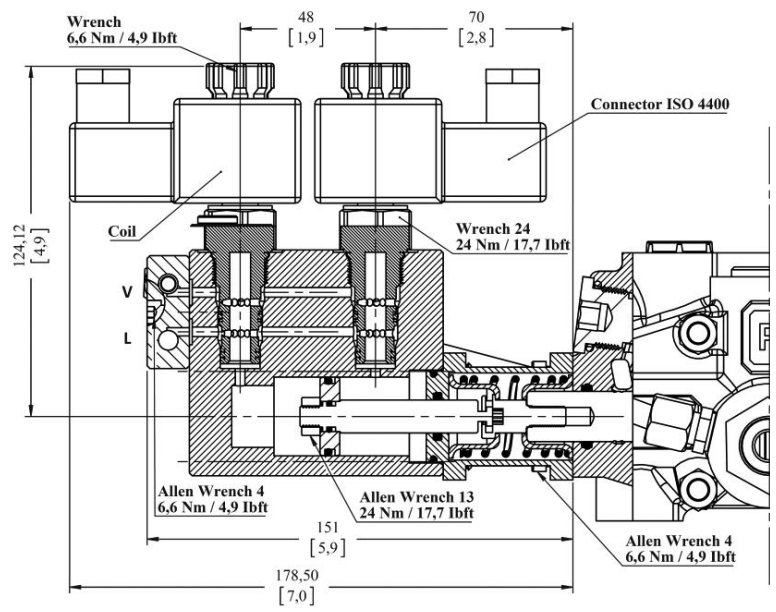

Diagram

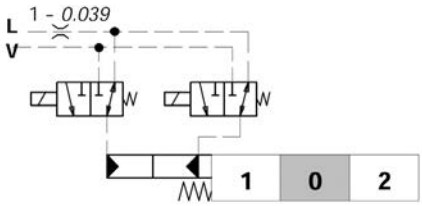

Operating Features

Pilot Pressure .....: 10 Bar / 145 Psi
: 50 Bar / 725 Psi
Max back pressure on drain L....:25 Bar / 360 Psi

Selenoid Operating Features

Coil Connection.....: ISO 4400
Nominal voltage.....: 12 VDC / 24 VDC
Power rating.....: 21 W
Duty cycle.....: %100
Protection type.....: IP 65
Nominal voltage tolerance.....: ±10
Max temperatures.....: 100 C°
Stroke.....: ±5,5 mm

ORDER CODE

External Pilot Collector
COL 11 - 10COL1001 – Kit For Section 1
COL 12 - 10COL1001 – Kit For Section 2
COL 13 - 10COL1001 – Kit For Section 3
COL 14 - 10COL1001 – Kit For Section 4
COL 15 - 10COL1001 – Kit For Section 5
COL 16 - 10COL1001 – Kit For Section 6
COL 17 - 10COL1001 – Kit For Section 7
COL 18 - 10COL1001 – Kit For Section 8

Standard Pilot Collector
COL 21 - 10COL2001 – Kit For Section 1
COL 22 - 10COL2001 – Kit For Section 2
COL 23 - 10COL2001 – Kit For Section 3
COL 24 - 10COL2001 – Kit For Section 4
COL 25 - 10COL2001 – Kit For Section 5
COL 26 - 10COL2001 – Kit For Section 6
COL 27 - 10COL2001 – Kit For Section 7
COL 28 - 10COL2001 – Kit For Section 8

SPOOL POSITIONERS – SIDE OF RETURN

ON/OFF Electro - Hydraulic Control Connections

Connection Type 1: **Collector kit for external pilot and drain**

Sectional Appearance

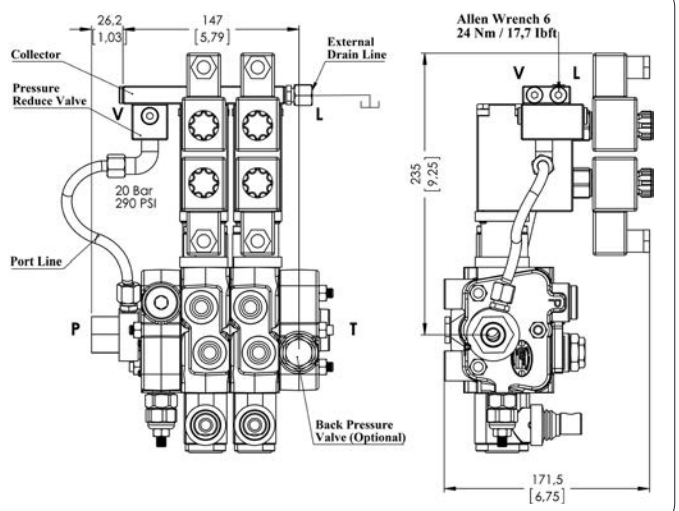

Diagram

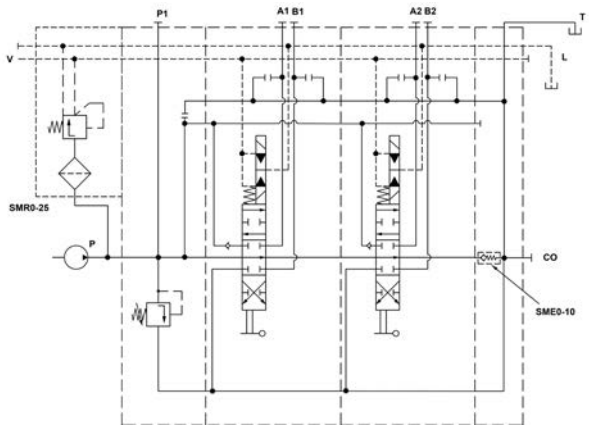

Operating Features
External Pressure Reducing Valve .....: 20 Bar / 290 Psi (For V line)
Code= ORV PD45-2P (SD(LA)-SMR2-125-PP)/P-1A-STL-45EH/ P-1A-STL-45EH (SMR0 -COL12-12V)/ SO-PT1 / SGT

Connection Type 2: **Collector kit with pilot and drain lines**

Sectional Appearance

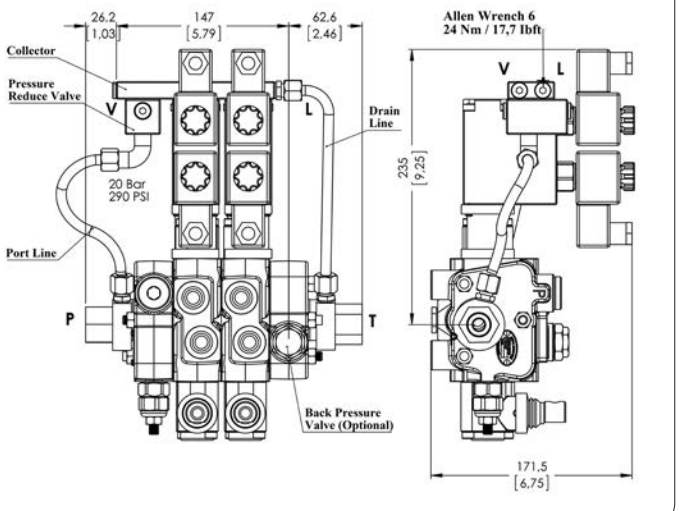

Diagram

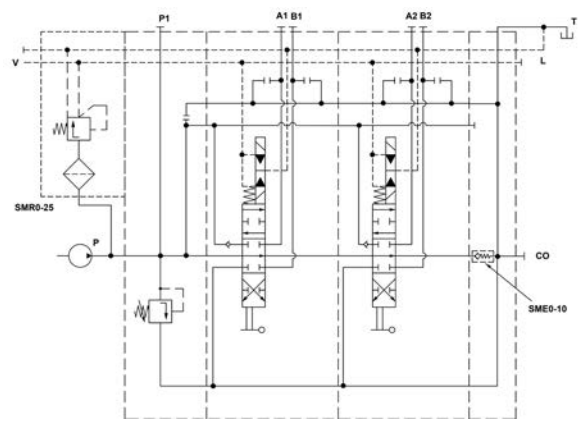

SMR 0-25 Valve Operating Features (Pressure reducing valve)
Outlet Pressure .....: 20 Bar / 290 Psi
Max. Flow.....: 8 l/min
Filtering .....:80 µ
Code= ORV PD45-2P (SD(LA)-SMR2-125-PP)/P-1A-STL-45EH/ P-1A-STL-45EH (SMR0 –COL22-12V)/ SO-PT1 / SGT

WORKING SECTION KIT

With Port Valves Type

Kit No: **45P**

Sectional Appearance

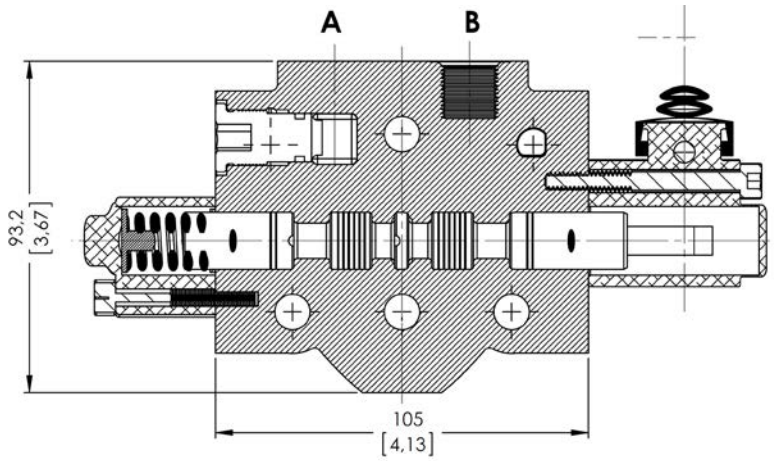

Diagram

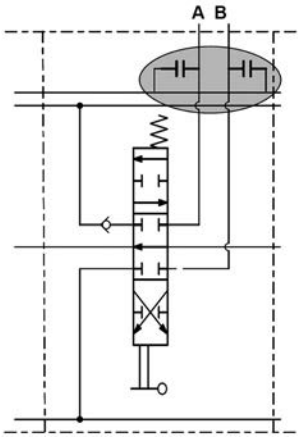

SPOOL POSITIONERS – SIDE OF LEVER CONTROL

Lever Controls

Kit No: **STL - L0**

Sectional Appearance

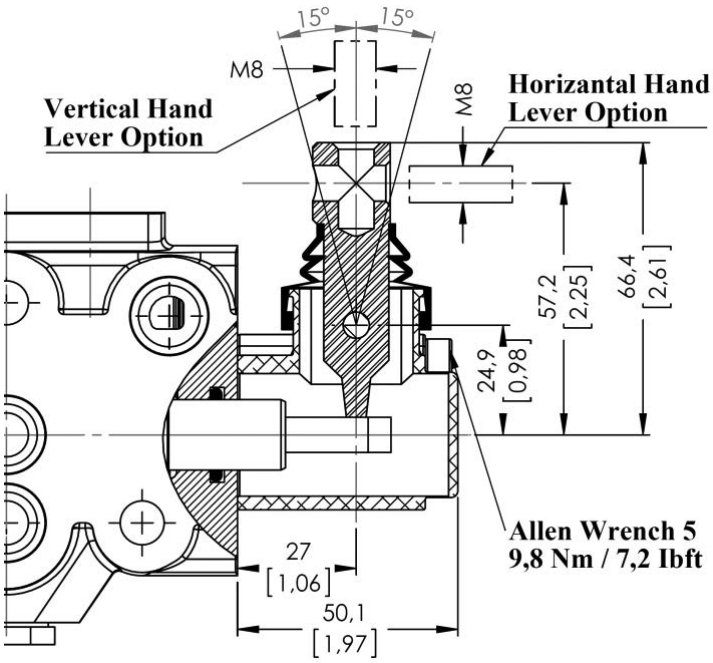

Diagram

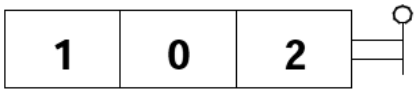

Kit No: **STL - L180**

Sectional Appearance

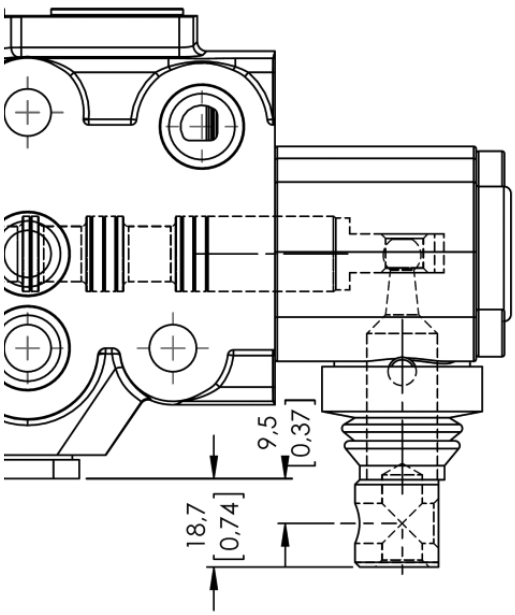

Diagram

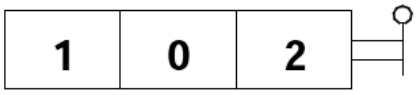

Note: Arm lever pivot box is aluminium cap protected. And it can be rotated 180º.

SPOOL POSITIONERS – SIDE OF LEVER CONTROL

Lever Controls - Joystick

Kit No: **JL**

Exploded View | Diagram

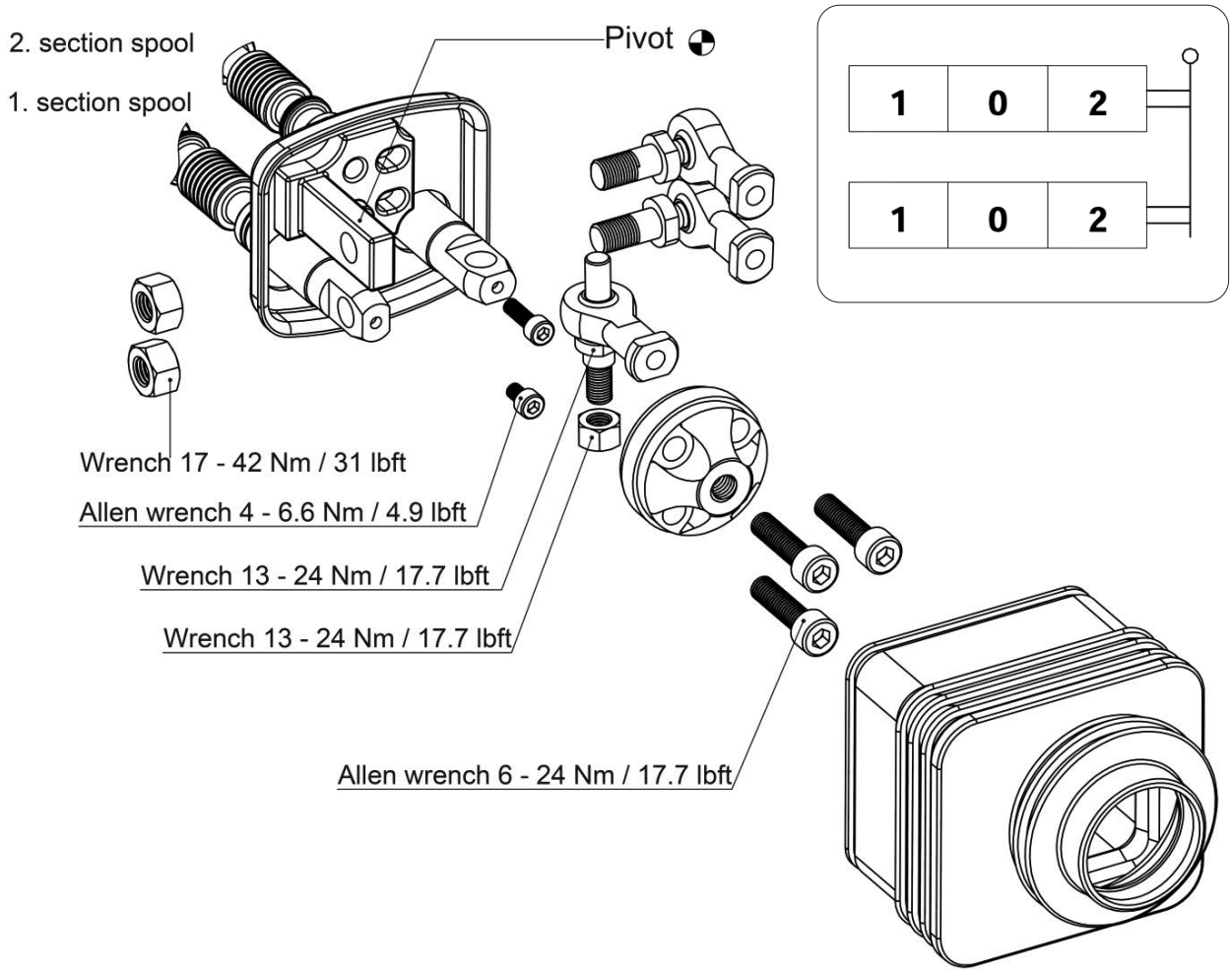

Operation Angle:

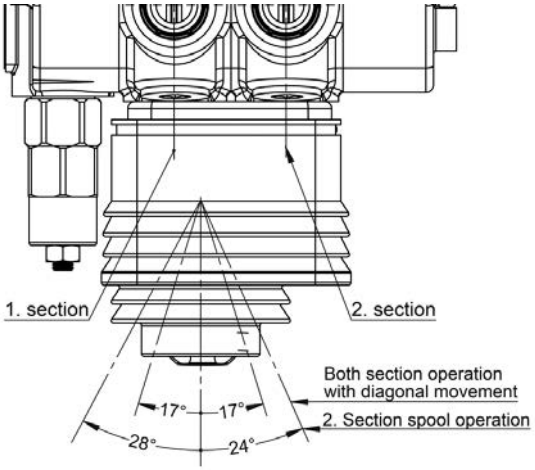

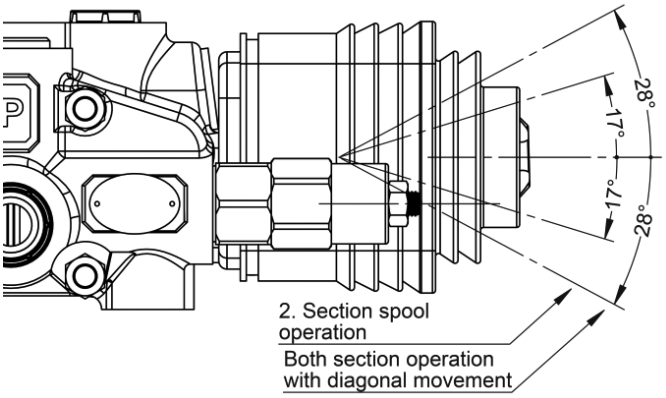

SPOOL POSITIONERS – SIDE OF LEVER CONTROL

Lever Controls - Joystick

Dimensions and movement sceme

Type No: **JL1** — **Application:** Pivot placed down on the Left

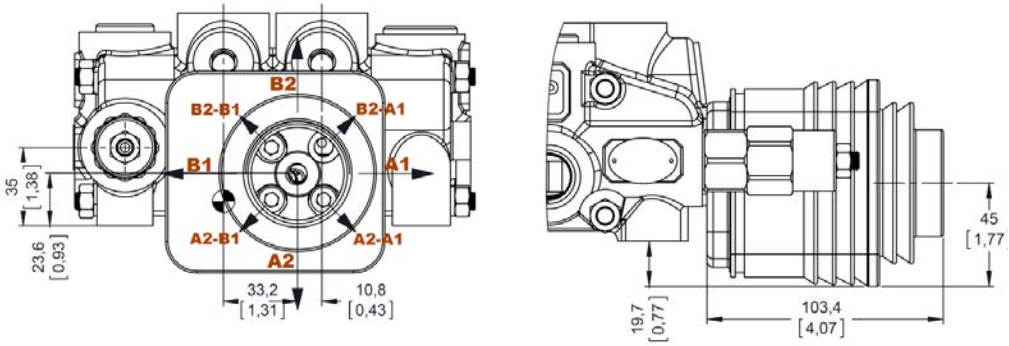

Type No: **JL2** — **Application:** Pivot placed down on the right

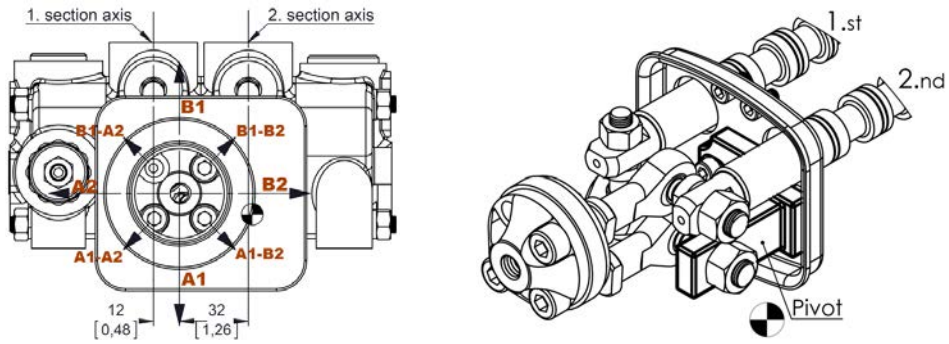

Type No: **JL3** — **Application:** Pivot placed above on the Left

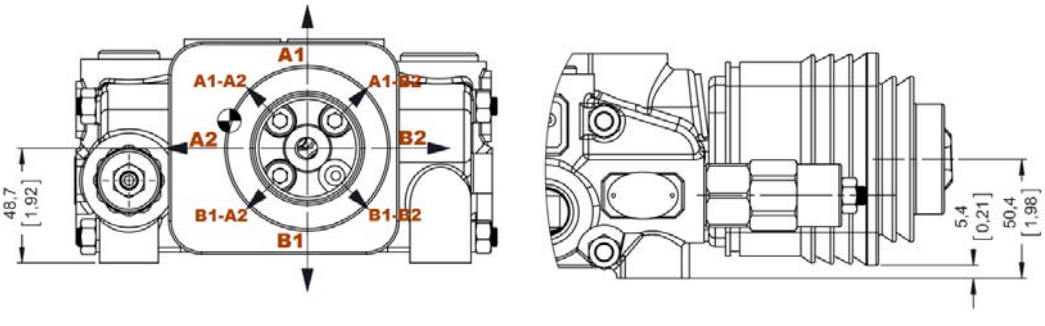

Type No: **JL4** — **Application:** Pivot placed above on the right

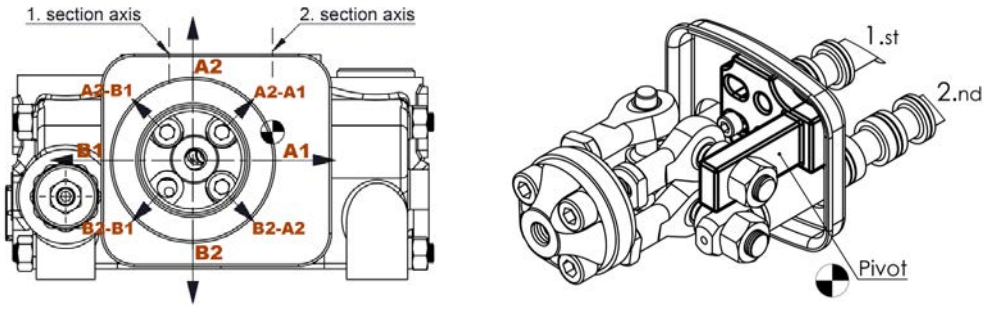

SPOOL POSITIONERS – SIDE OF LEVER CONTROL

Lever Controls - Cable Control

Kit No: **HL**

Sectional Appearance | Diagram

Waterproof cap prearranged for remote control with flexible cable.

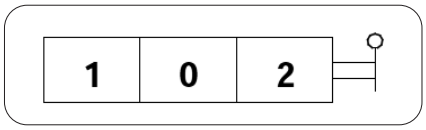

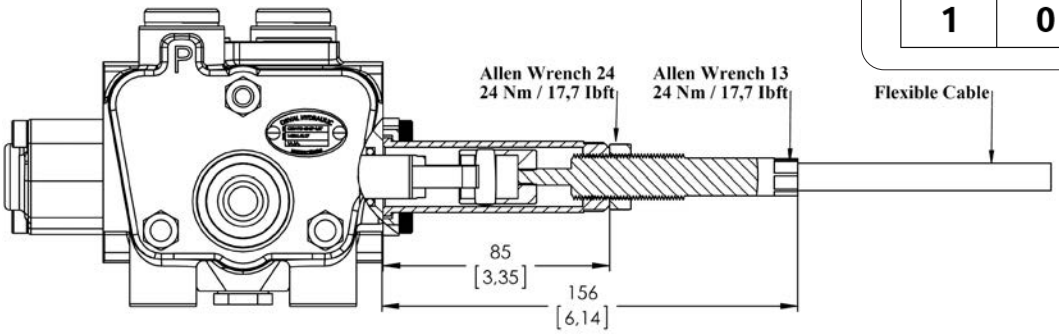

Note: Remote cable control has several options. Please indicte the cable length demanded and contact our sales department.

Example Operation

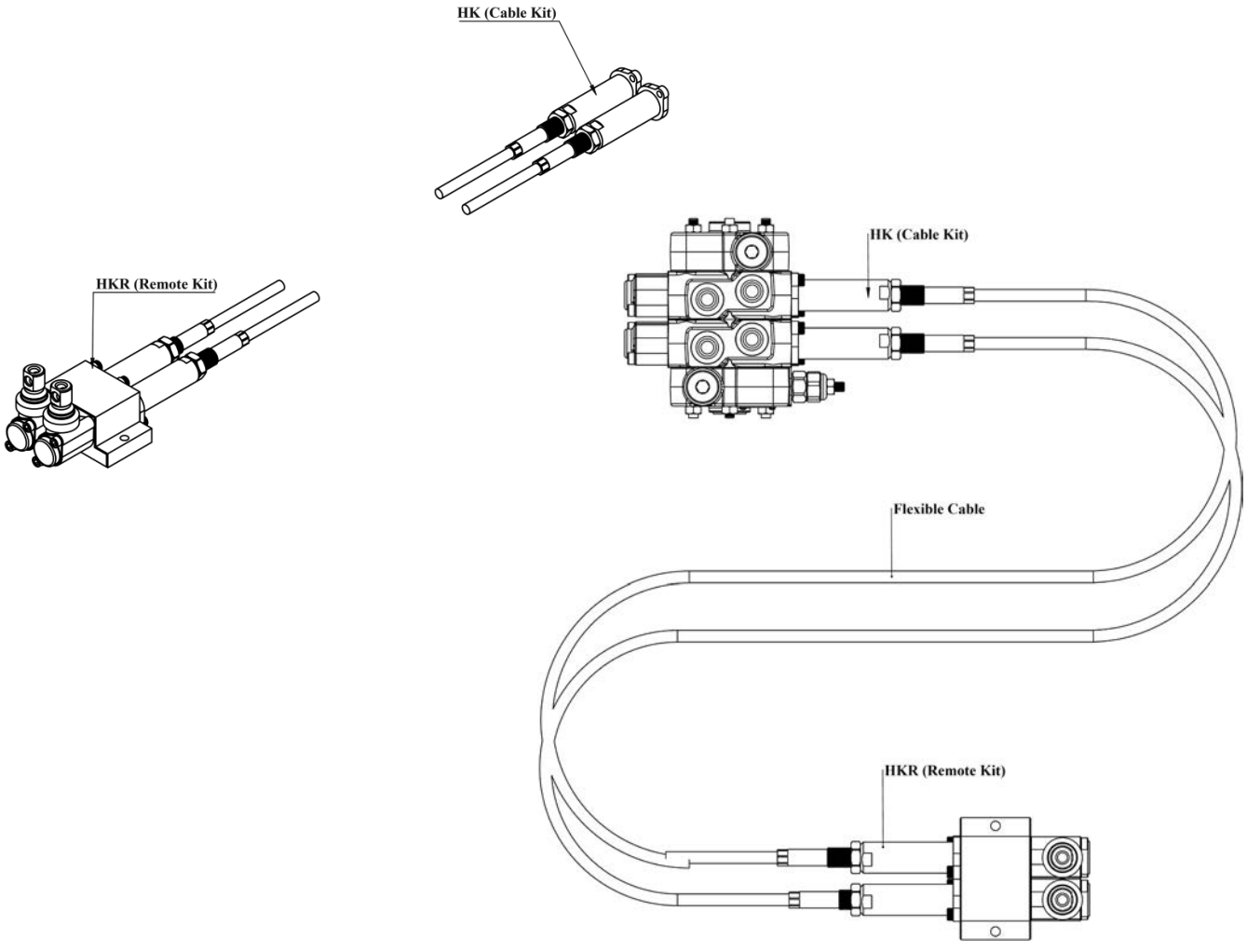

COMPLETE CONTROL – ON / OFF SOLENOID CONTROL

ON/OFF Solenoid Control

Kit No: **SEC**

Sectional Appearance

Electric wiring example

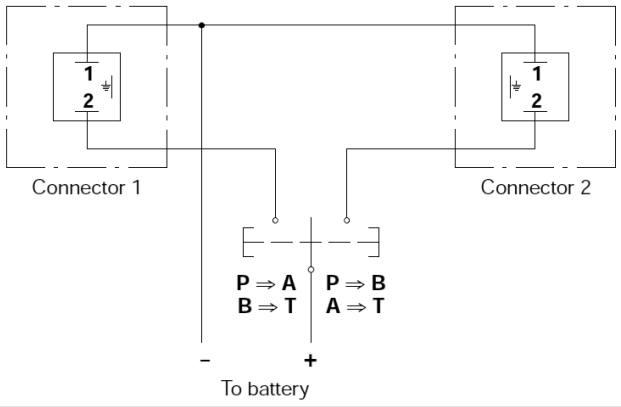

Diagram

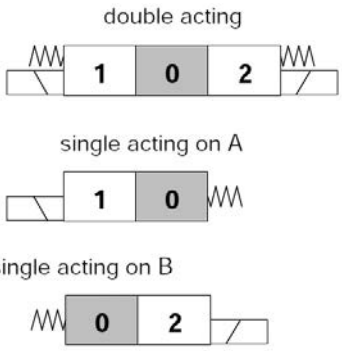

Operating Features

Max Working Pressure.....: 230 Bar / 3300 Psi
Max back pressure .....: 5 Bar / 80 Psi
Internal Lekage.....: 10 cm3 / min

Selenoid Operating Features

Nominal voltage.....: 12 VDC / 24 VDC
Power rating.....: 36 W
Duty cycle.....: %100
Nominal voltage tolerance.....: ±10
Coil insulation .....: Class H
Stroke.....: ±3

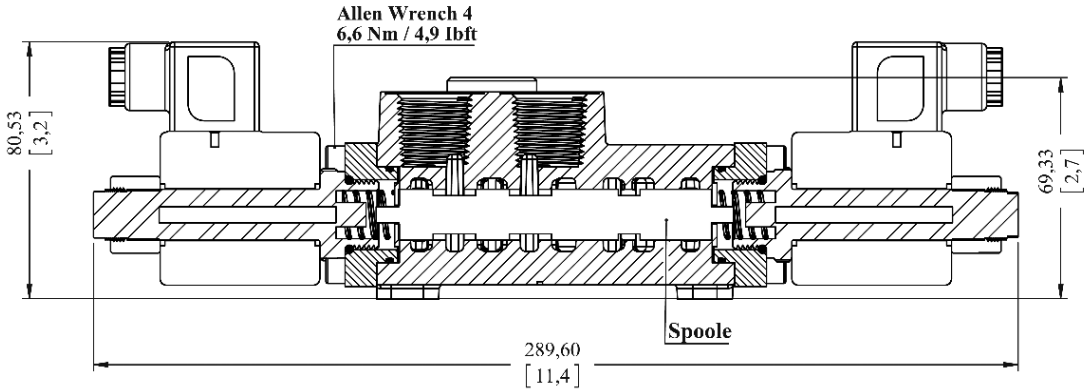

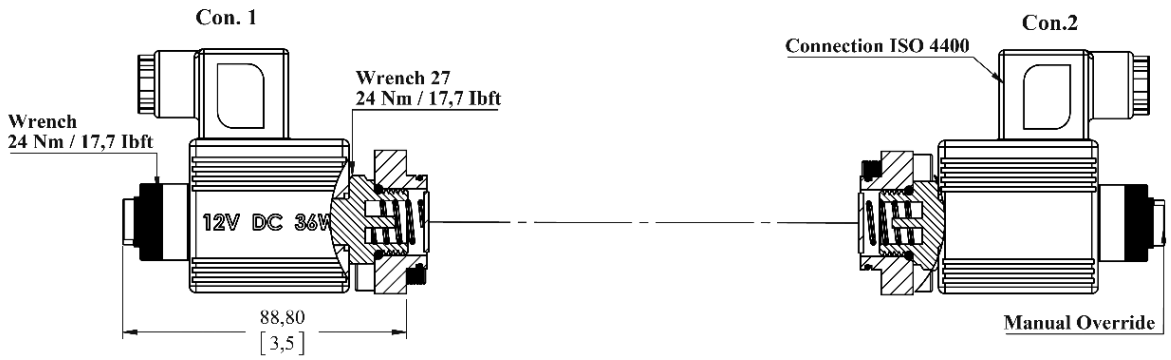

OUTLET COVER - TANK SIDE

Output Cover Options

Kit No: **SO**

Sectional Appearance

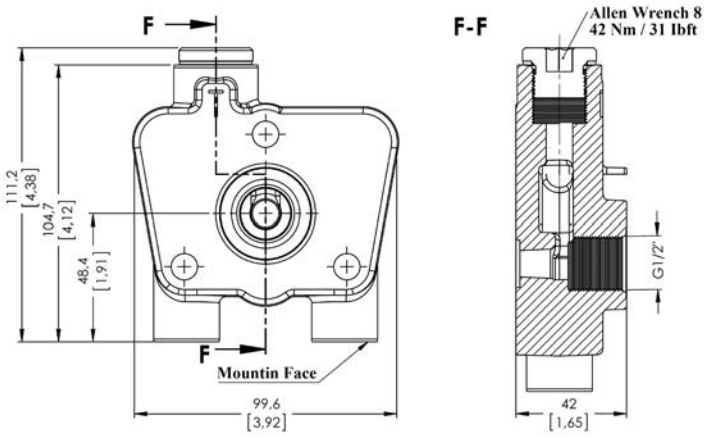

Kit No: **TO**

Sectional Appearance

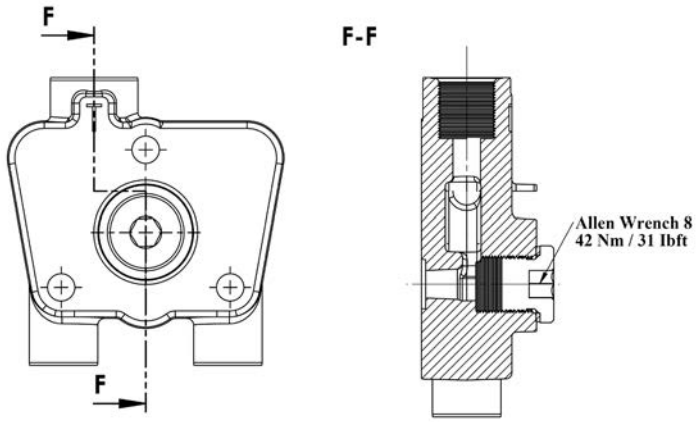

Hydraulic Diagram

Type No: **SO**

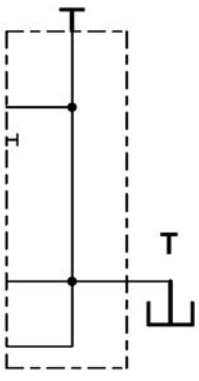

Type No: **TO**

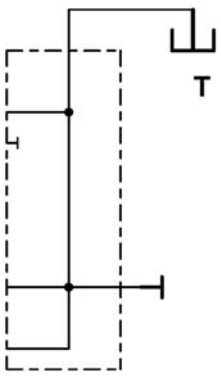

OUTLET COVER - TANK SIDE

Output Cover Options

Kit No: **TCO**

Sectional Appearance

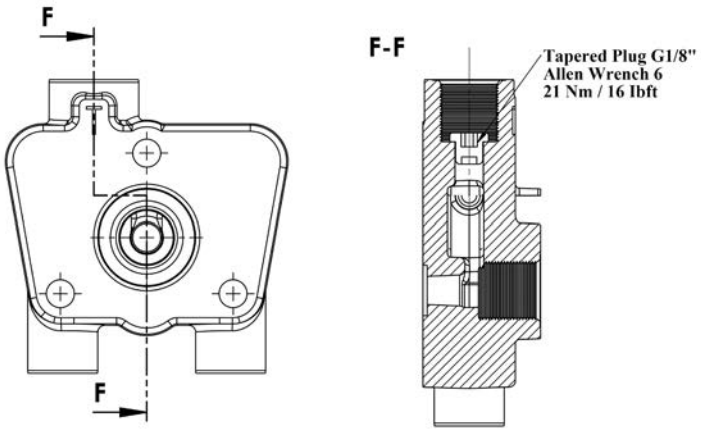

Kit No: **TC**

Sectional Appearance

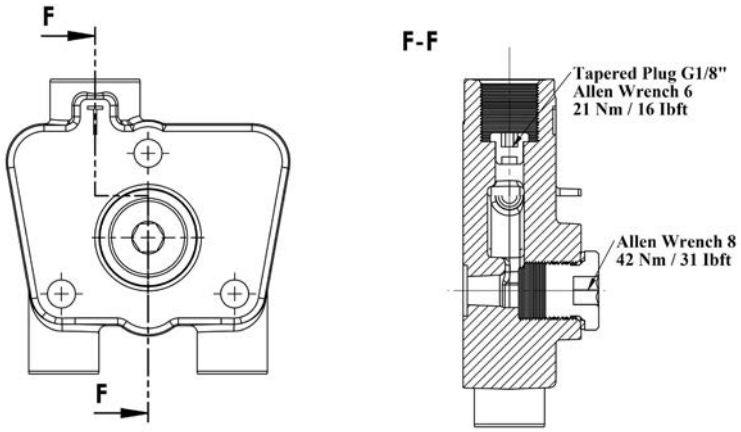

Hydraulic Diagram

Type No: **TCO**

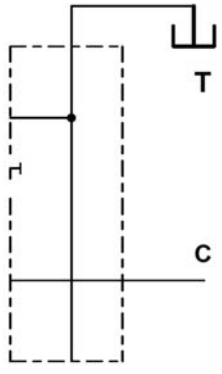

Type No: **TC**

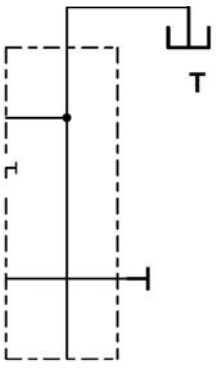

PORT VALVES OPTIONS

Anti Shock Valves

Code:

YAS-1 (T1-100)

- **Pressure Setting in Bar**
- **Adjusting type T=With screw , L=Valve Set / Spring Type (1,2,3)**
- **1 = Mounted Port A , 2 = Mounted Port B , 3 = Mounted Port A and B**

Hydraulic Diagram

Kit No: **YAS1**

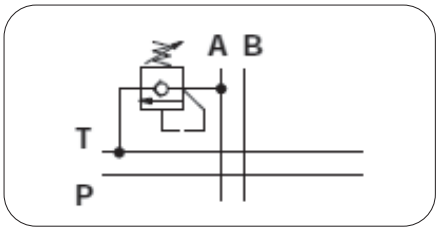

Kit No: **YAS2**

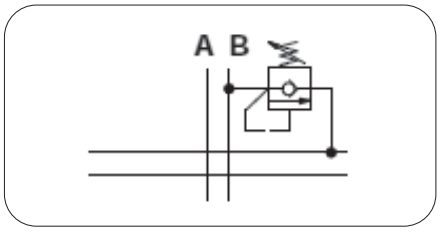

Kit No: **YAS3**

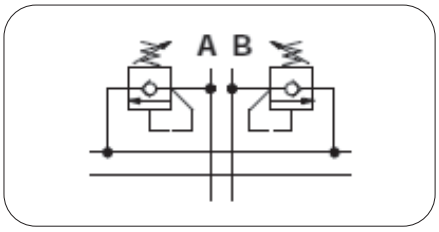

Adjustment Type on Valve:

T = With screw

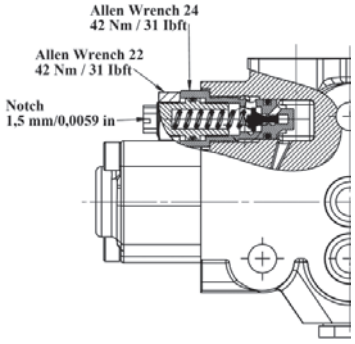

L = Valve set

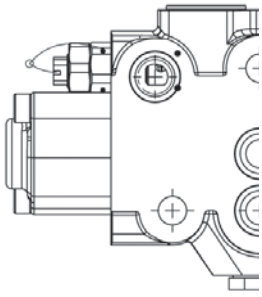

Performance Data:

Spring No=1 , Setting 50 bar / 725 psi

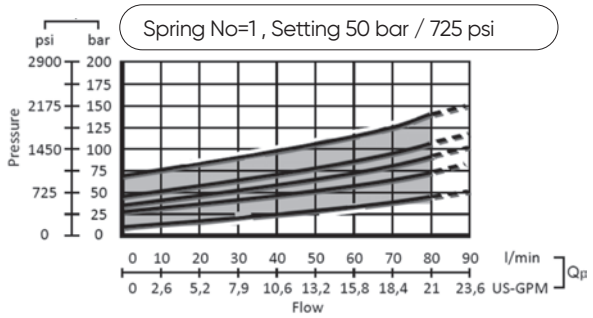

Spring No=2 , Setting 100 bar / 1450 psi

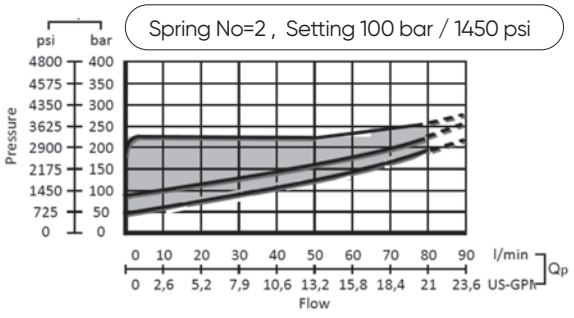

Spring No=3 , Setting 200 bar / 2900 psi

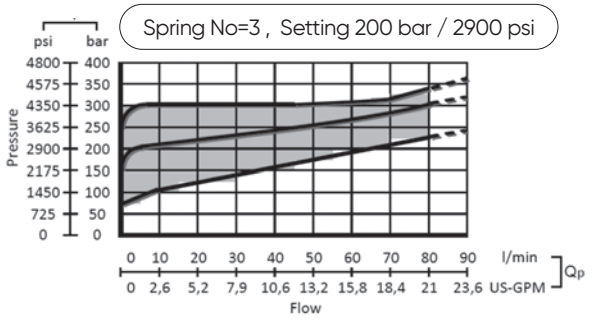

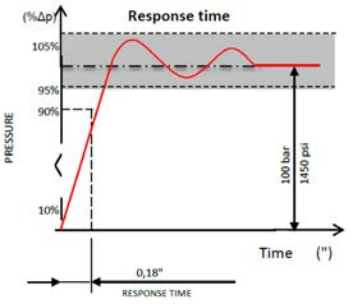

PORT VALVES OPTIONS

Anti shock And Anti Cavitation Valves

Code:

YAA-1 (T1-100)

- **Pressure Setting in Bar**
- **Adjusting type T=With screw , L=Valve Set / Spring Type (1,2,3)**
- **1 = Mounted Port A , 2 = Mounted Port B , 3 = Mounted Port A and B**

Hydraulic Diagram

Kit No: **YAA1**

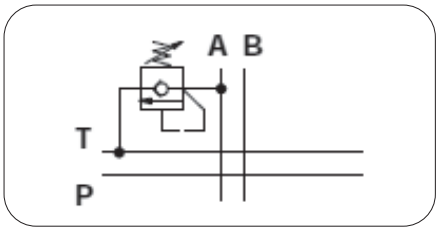

Kit No: **YAA2**

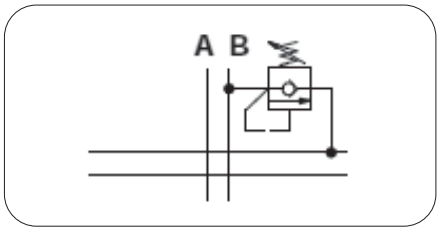

Kit No: **YAA3**

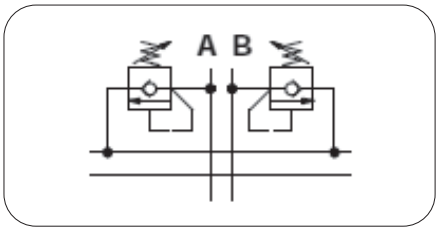

Adjustment Type on Valve:

T = With screw

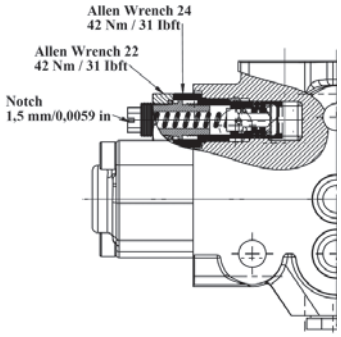

L = Valve set

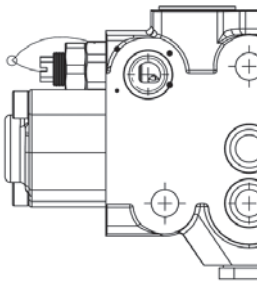

Performance Data:

Spring No=1 , Setting 63 bar / 900 psi

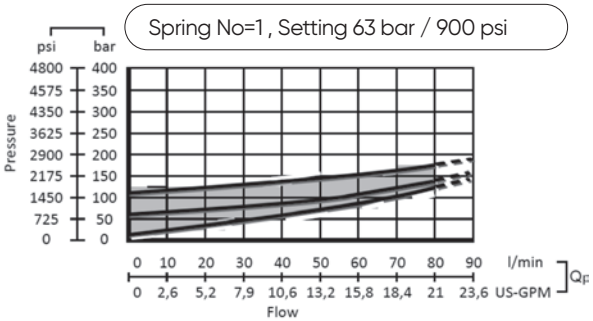

Spring No=2 , Setting 100 bar / 1450 psi

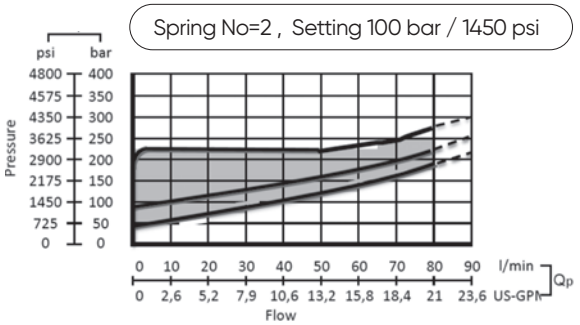

Spring No=3 , Setting 200 bar / 2900 psi

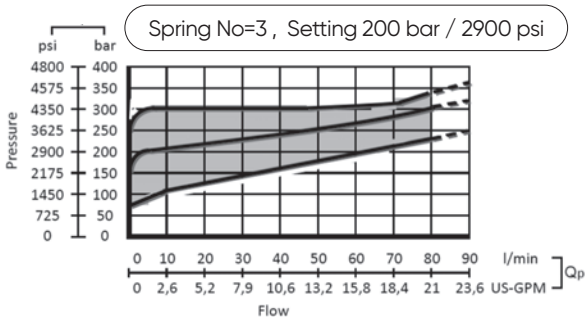

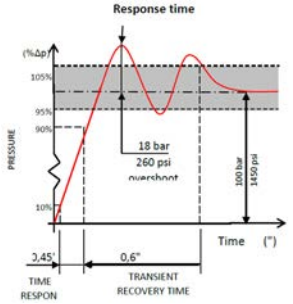

PORT VALVES OPTIONS

Anti Cavitation Valves

Code:

YAC-1 → **1 =** Mounted Port A , 2=Mounted Port B , 3=Mounted Port A and B

Hydraulic Diagram

Kit No: **YAC1**

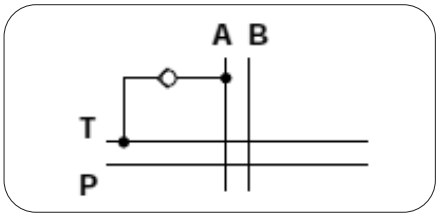

Kit No: **YAC2**

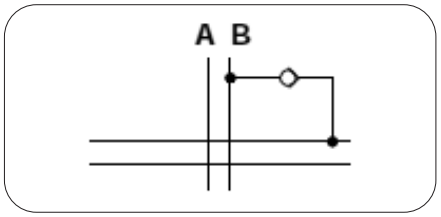

Kit No: **YAC3**

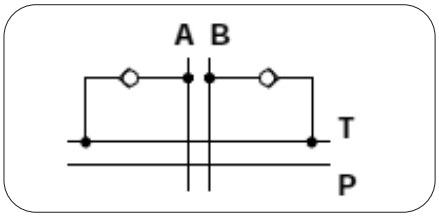

Adjustment Type on Valve And Data:

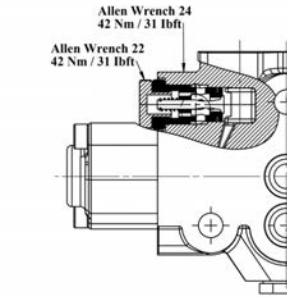

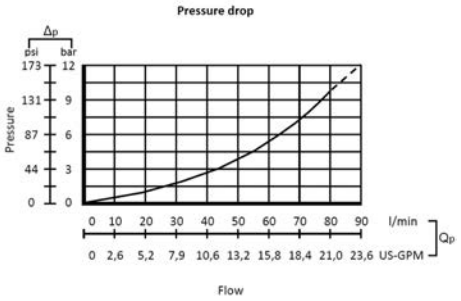

Valve Blaking

Plug with tank connection

DST-1 (1:Mounted port A – 2:Mounted port B)

Sectional Appearance

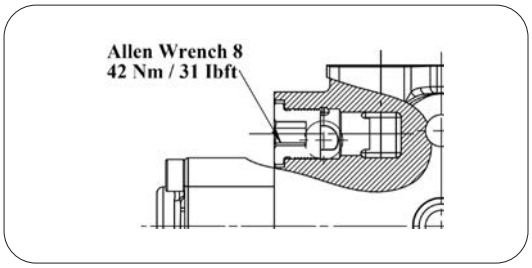

Hydraulic Diagram

DST1

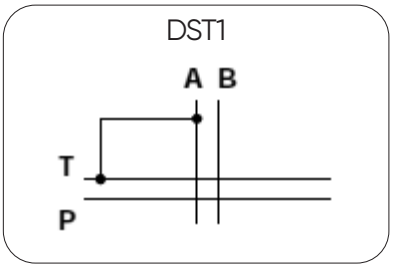

DST2

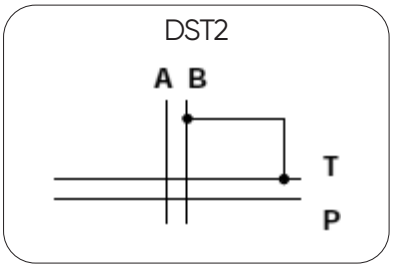

Plug

YP-1 (1:Mounted port A – 2:Mounted port B – 3:Mounted port A and B)

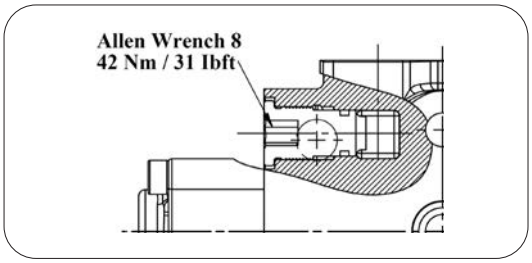

YP1

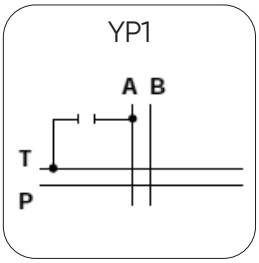

YP2

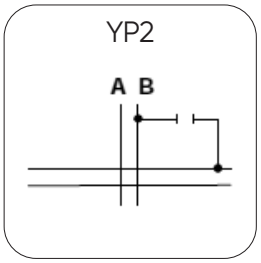

YP3

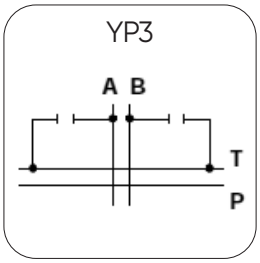

INSTALLATION AND MAINTENANCE

The ORV-PD45 valve is assembled and tested as per the technical specification of this catalog. Before the final installation on your equipment, follow the below recommendation:

• The valve can be assembled in any position, in order to prevent body deformation and spool sticking mount the product on a flat surface;

• In order to prevent the possibility of water entering the lever box and spool control kit, do not use high pressure wash down directly on the valve;

• Before painting, ensure plastic port plugs are tightly fitted.

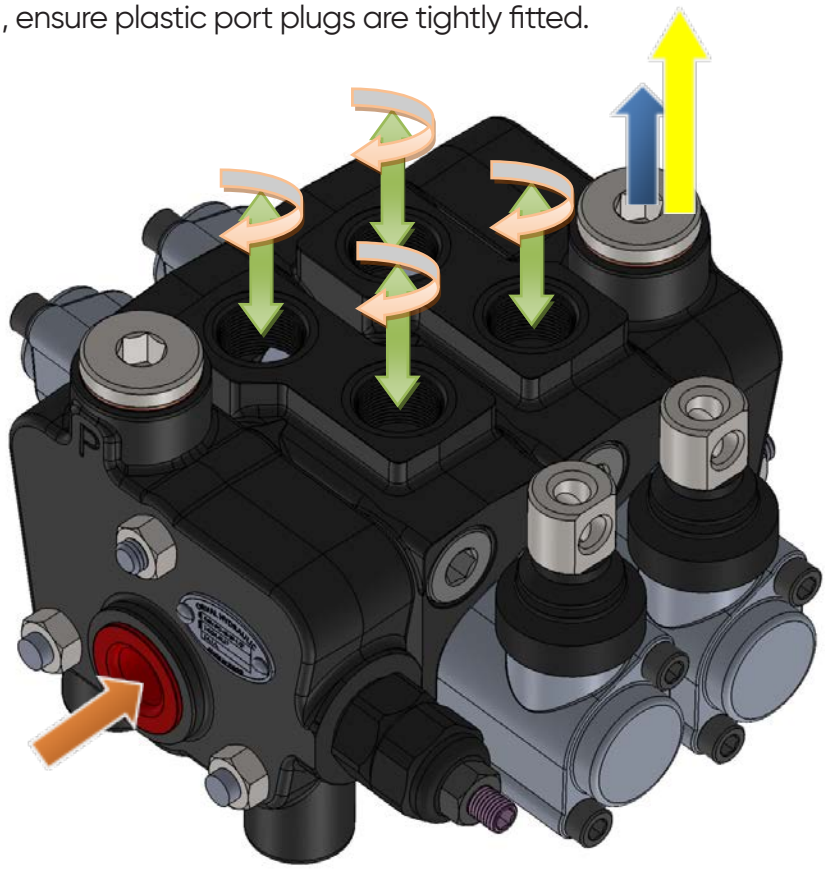

Threads Type (Nm / lbft)	P Port	A and B Port	T Port
BSP (ISO 228/1)	G 3/8	G 3/8	G 1/2
With O--Ring seal	35 / 25.8	35 / 25.8	50 / 36.9
With copper washer	40 / 29.5	40 / 29.5	60 / 44.3
With steel and rubber washer	30 / 22.1	30 / 22.1	60 / 44.3
BSP (ISO 228/1)	G 1/2	G 1/2	G 1/2
With O--Ring seal	50 / 36.9	50 / 36.9	50 / 36.9
With copper washer	60 / 44.3	60 / 44.3	60 / 44.3
With steel and rubber washer	60 / 44.3	60 / 44.3	60 / 44.3
UN--UNF (ISO 11926--1)	3/4--16 UNF--2B	9/16--18 UNF--2B	3/4--16 UNF--2B
With O--Ring seal	50 / 36.9	30 / 22.1	50 / 36.9
METRIC (ISO 262)	M18 x 1.5	M18 x 1.5	M18 x 1.5
With O--Ring seal	35 / 25.8	35 / 25.8	35 / 25.8
With copper washer	40 / 29.5	40 / 29.5	40 / 29.5
With steel and rubber washer	40 / 29.5	40 / 29.5	40 / 29.5

TECHNICAL DATA

Ports Dimensional Data

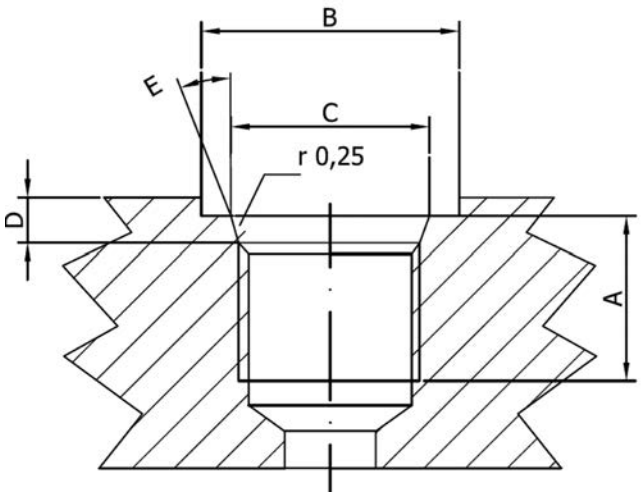

SAE UN-UNF (ISO 725)						
Dimensions		9/16-18 UNF SAE6		3/4-16 UNF SAE8		7/8-14 UNF SAE10
mm	in					
A		13	0,51	15	0,59	17	0,67
B		25	0,83	30	1,18	34	1,34
C		13,6	0,61	20,6	0,81	23,9	0,94
D		2,5	0,10	2,5	0,10	2,5	0,10
E		15°		15°		15°	

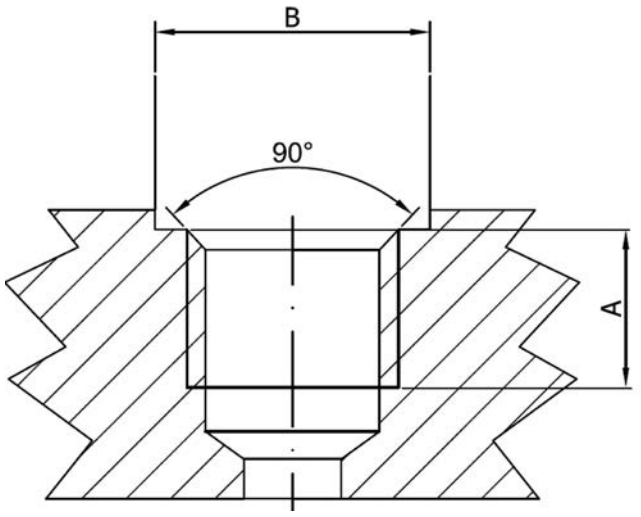

BSP (ISO 228)						
Dimensions		G1/4		G3/8		G1/2
mm	in					
A		14	0,55	14	0,55	16	0,63
B		19	0,75	23	0,91	27	1,06

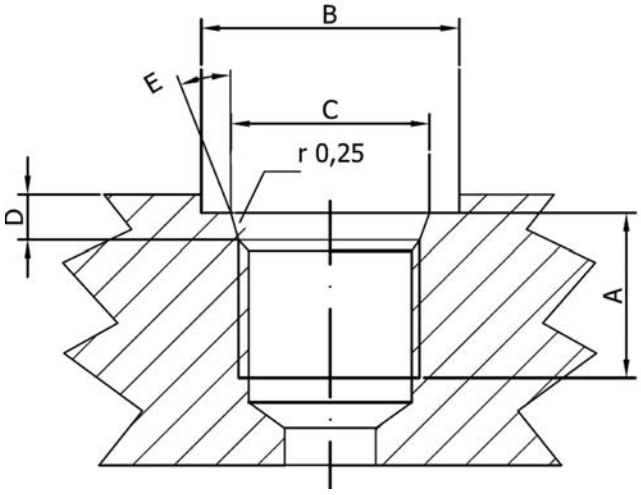

METRIC (ISO 262)					
Dimensions		M18x1,5 ISO 262		M22x1,5 ISO 262	
mm	in				
A		14	0,55	16	0,63
B		27,5	1,08	31,5	1,24

ORVAL HYDRAULIC

ORV PD45

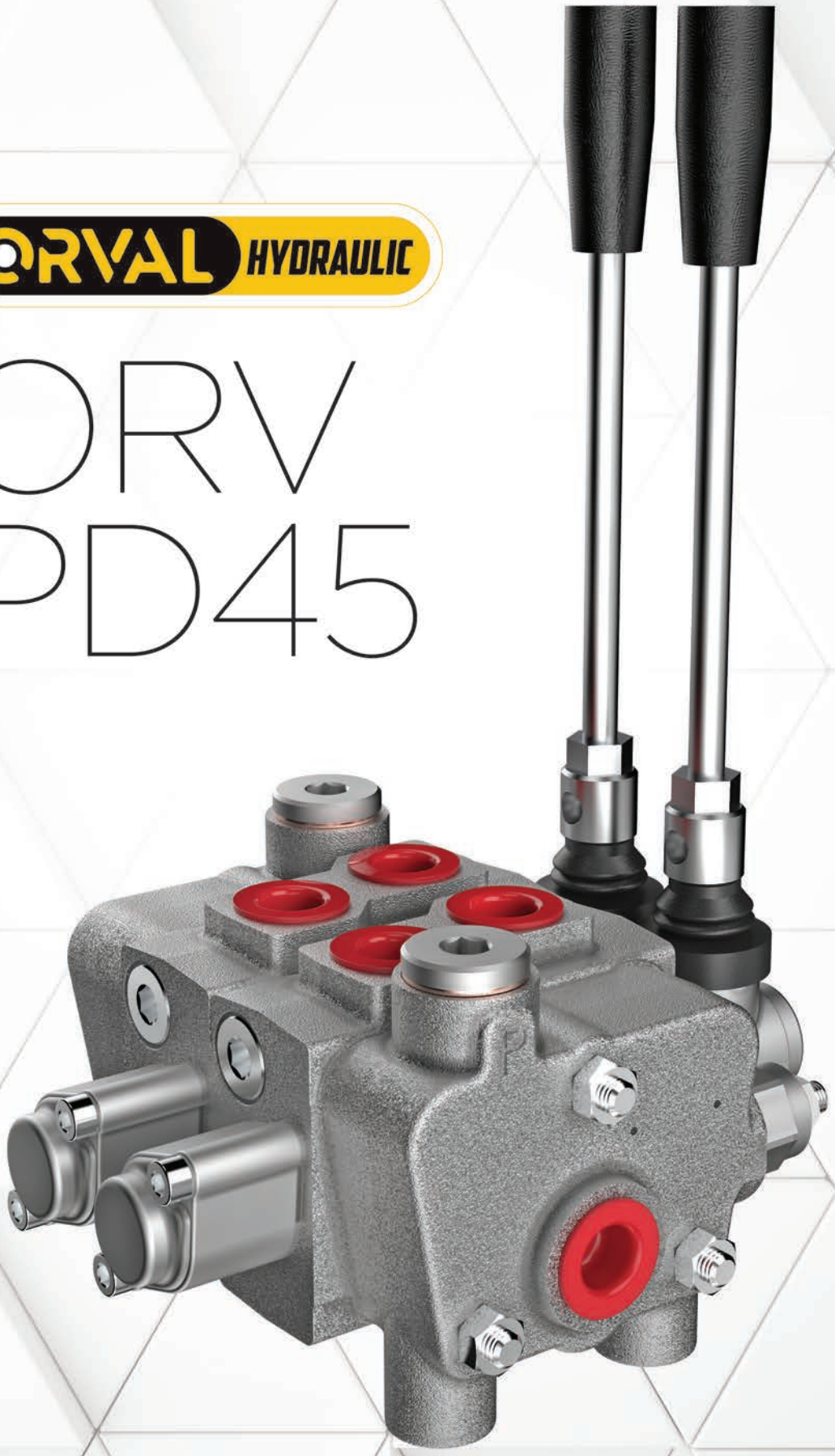

ORVAL HYDRAULIC

SECTIONAL
VALVES

ORV-PD60



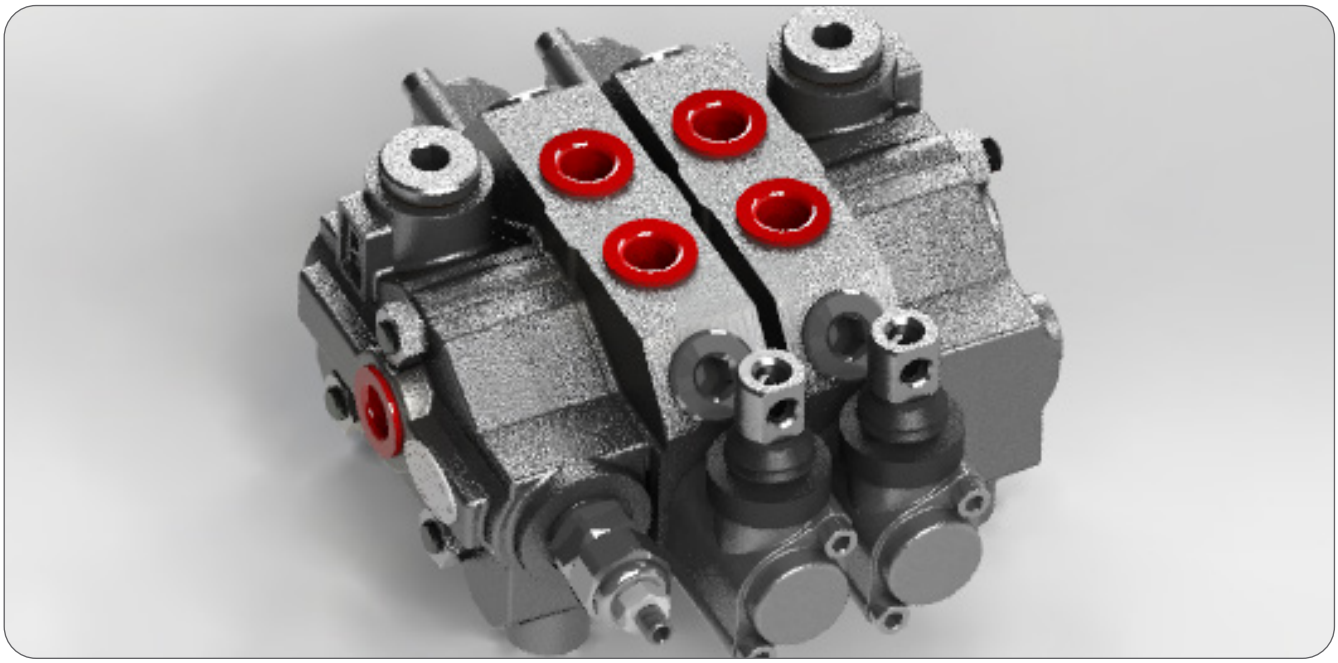

CONTENTS

Working Conditions	3
Dimensional Data	3
Hydraulic Circuit	3
Performance Data And Curve	3
Inlet Relief Options	3
Ordering Codes	3
Spool Options	3
Spool Positioners – Side of Return	3
Working Section Kit	3
Spool Positioners – Side of Lever Control	3
Spool Positioners – Side of Lever Control	3
Spool Positioners – Side of Lever Control	3
Spool Positioners – Side of Lever Control	3
Complete Control – On / Off Solenoid Control	3
Outlet Cover- Tank Side	3
Port Valves Options	3
Installation and Maintenance	3
Technical Data	3

Additional Informations

Note: This catalog shows the product in the most standard configurations. For Other Configurations, more detailed information or special request, Please contact Customer Service Dpt.

Warning!: All specifications of this catalog refer to the standard product at this date (01/2020). ORVAL, oriented to a continuous improvement, reserves the right to discontinue, modify or revise the specifications, without notice.

ORVAL IS NOT RESPONSIBLE FOR ANY DAMAGE CAUSED BY AN INCORRECT USE OF THE PRODUCT.

WORKING CONDITIONS

Nominal Flow Rating / Displacement	60 l/min	16 U.S.G.P.M
Maximum Working Pressure (Series Circuit)	210 Bar	3050 PSI
Maximum Working Pressure (Parallel Circuit)	315 Bar	4600 PSI
Max. Back Pressure	25 Bar	360 PSI
Oil Temperature with NBR Seals	-20 to 80 C°	-4 to 176 F °
with FPM (Viton) Seals	-20 to 100 C°	-4 to 212 F °
Oil Viscosity – Operating Range	From 10 to 75 mm2/s	From 10 to 75 cSt
Minumum / Maximum	10 / 400 mm2/s	10 / 400 cSt
Oil Filtration	≤30 µ	
Ambiant Temperature Range	-35 to 60 C°	-31 to 140 F °
Number Of Spools	1 to 12	
Internal Leakage (at 100 bar (1450 PSI), 40C° (110 F°), 46 cSt – A(B)–T)	3 cm3/min	0,18 in3/min
Max. Level Of Contamination	19/16 - ISO 4406	
Tie rod tightening torque	30 Nm	22 lbft

Not: This catalogue shows technical specifications measured with mineral oil of 46 mm2/s-46 cSt viscosity at 40 C° temparture.

Features

• Simple, compact and heavy duty designed sectional valves from 1 to 12 sections for open and closed center hydraulic systems.
• Optionaly Carry-Over port only tandem circuit.
• Fitted with a main pressure relief valve.
• Interchangeable spool diametre is 16 mm – 0,63 in.
• Available manual, pneumatic, hydraulic and electro-pneumatic spool control kits.

DIMENSIONAL DATA

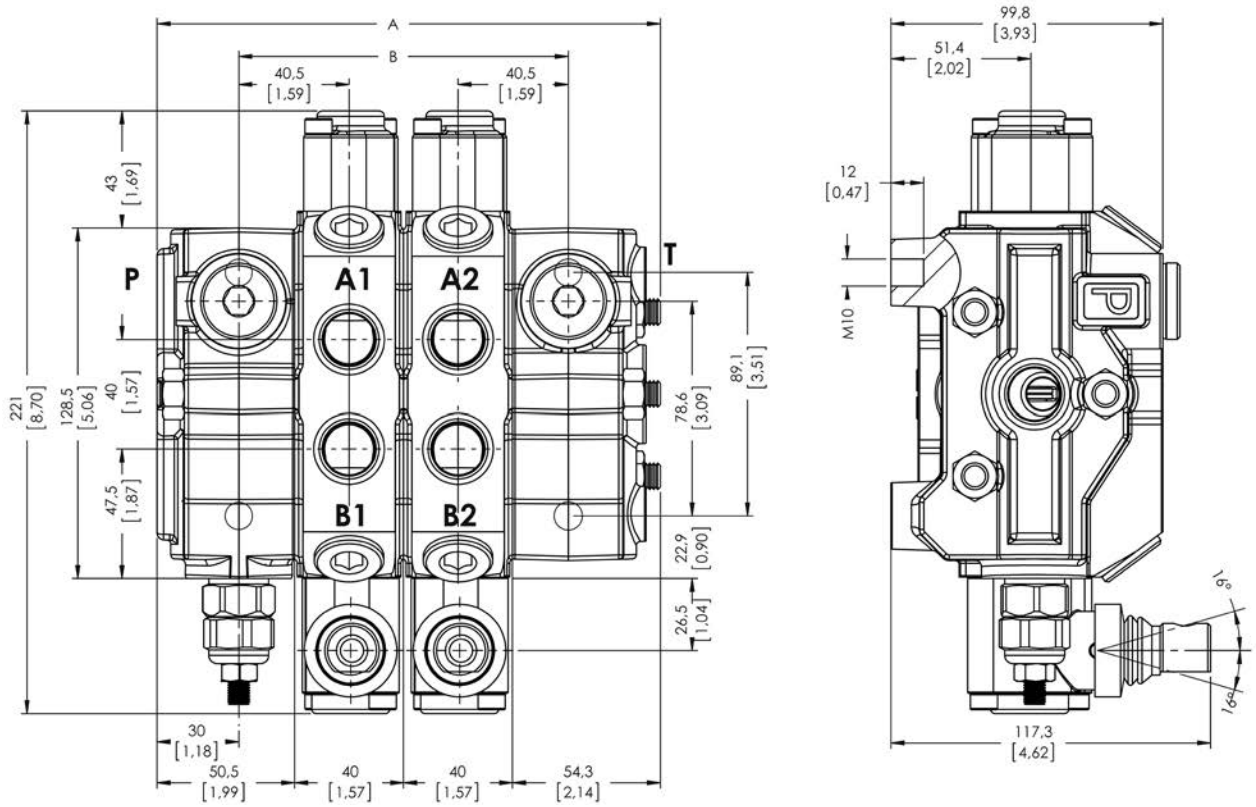

TYPE	A		B		Weight	
	mm	in	mm	in	Kg	lb
ORV- PD60-1P	139,5	5.49	81	3.19	7.26	16.13
ORV- PD60-2P	179,5	7.07	121	4.76	9.95	22.11
ORV- PD60-3P	219,5	8.64	161	6.34	12.64	28.09
ORV- PD60-4P	259,5	10.22	201	7.91	15.33	34.07
ORV- PD60-5P	299,5	11.79	241	9.49	18.02	40.04
ORV- PD60-6P	339,5	13.37	281	11.06	20.71	46.02
ORV- PD60-7P	379,5	14.94	321	12.64	23.40	52.00
ORV- PD60-8P	419,5	16.52	361	14.21	26.09	57.98
ORV- PD60-9P	459,5	18.09	401	15.79	28.78	63.96
ORV- PD60-10P	499,5	19.67	441	17.36	31.47	69.93
ORV- PD60-11P	539,5	21.24	481	18.94	34.16	75.91
ORV- PD60-12P	579,5	22.81	521	20.51	36.85	81.89

STANDARD THREADS

PORT	BSP (Iso 228) 3/8" Series	BSP (Iso 228) ½"Series	UN-UNF (Iso 11926-1)	Metric (Iso 262)
P Inlet	G 3/8	G 1/2	3/4-16 UNF	M18x1.5
A-B Ports	G 3/8	G 1/2	9/16-18 UNF	M18x1.5
T Outlet	G 1/2	G 1/2	3/4-16 UNF	M18x1.5
Pneumatic	G 1/4	G 1/4	NPTF 1/8 - 27	NPTF 1/8 - 27
Carry-Over	G 1/2	G 1/2	3/4-16 UNF	G 1/2

HYDRAULIC CIRCUIT

Parallel

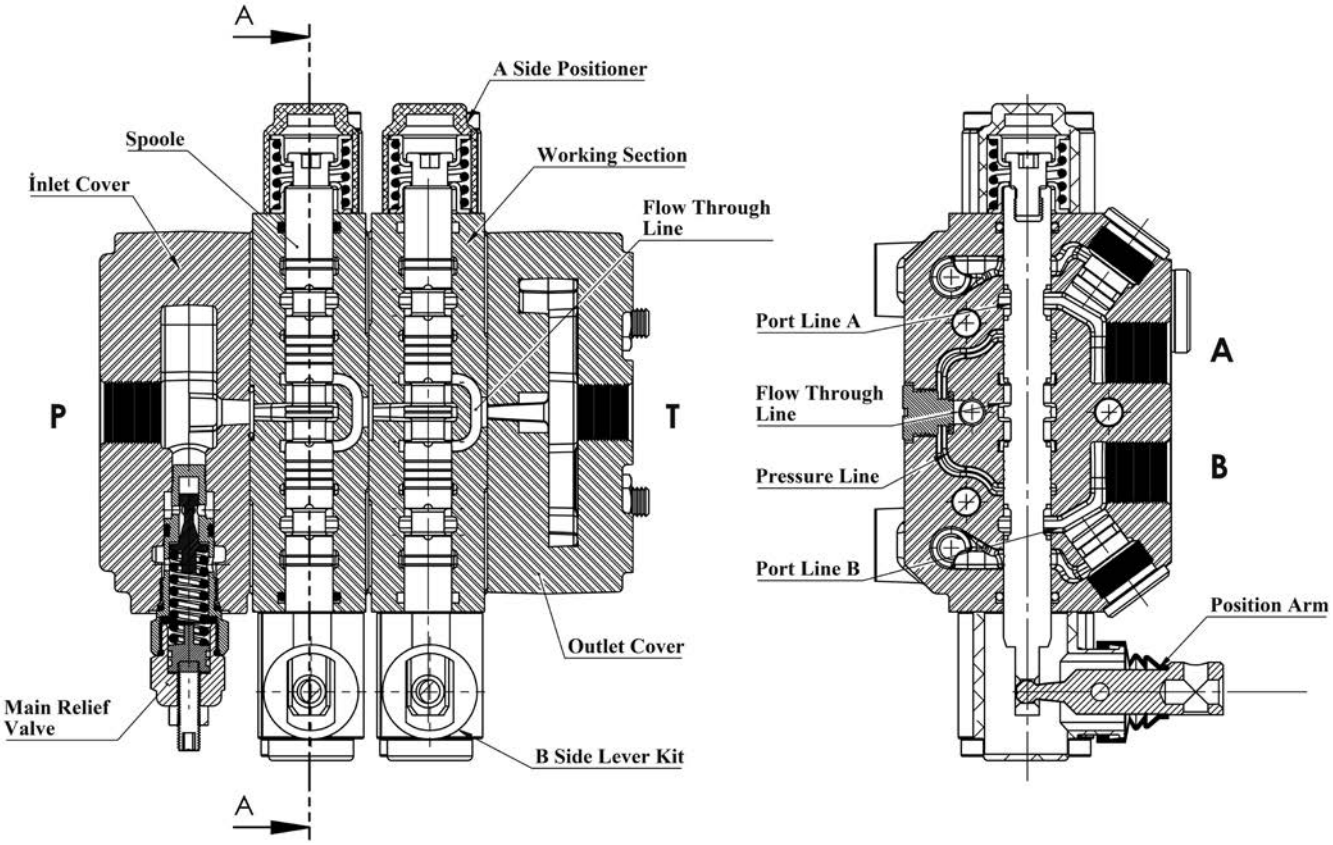

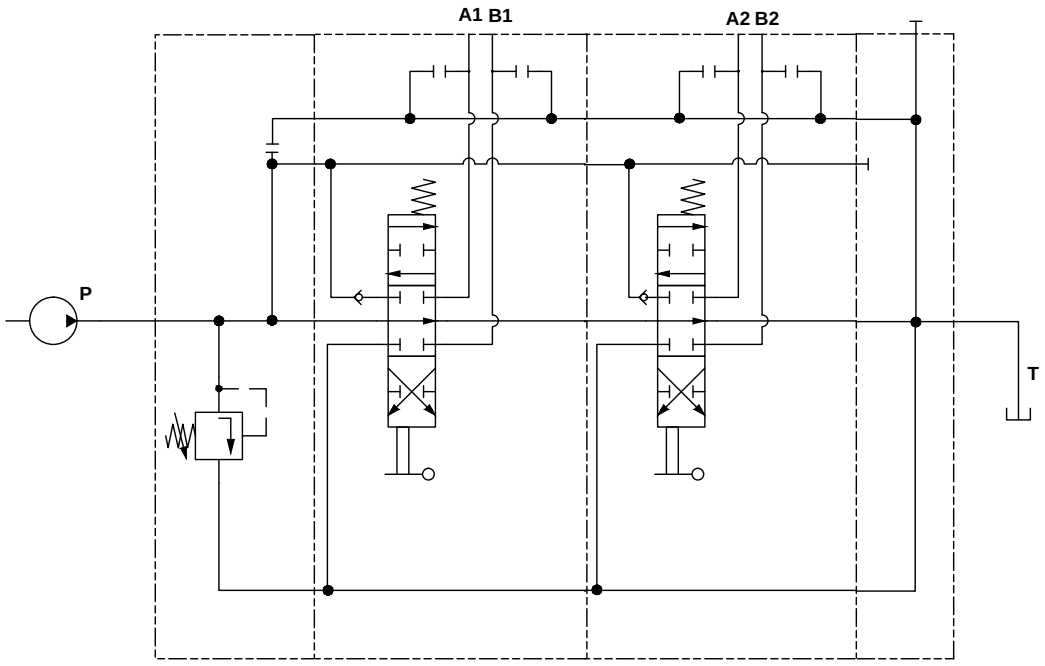

Code: ORV PD60-2P (SD(LA)-SMR2-125-PP)/P-1A-STL-SR/ P-1A-STL-SR/ SO-PT1 / SGT

HYDRAULIC CIRCUIT

Inlet Cover – Pump Side

SD - Side inlet with direct pressure relief valve
TD - Top inlet with direct pressure relief valve
SP - Side inlet with relief valve blanking plug

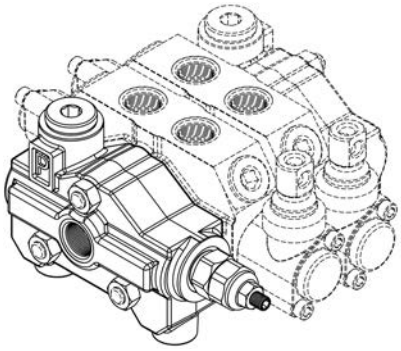

Type = SD

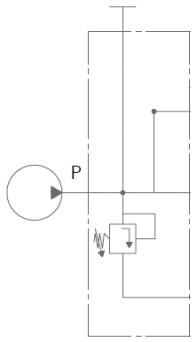

Type = TD

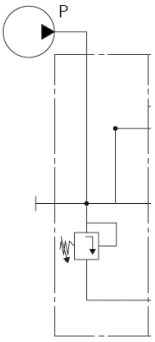

Type = SP

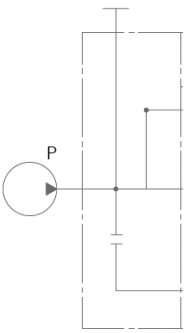

Working Sections

P – Parallel

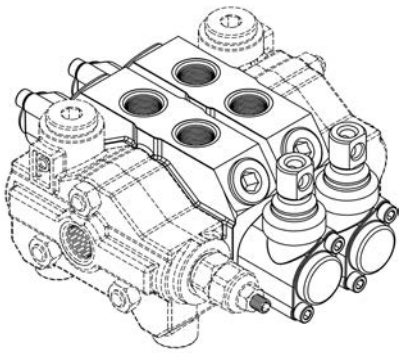

Type = P

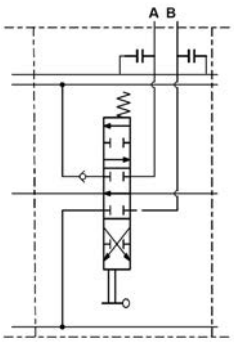

HYDRAULIC CIRCUIT

Outlet Cover (Tank Side)

SO - Side outlet
TO - Top outlet
TCO - Top outlet with carry-over
TC - Top outlet with closed centre

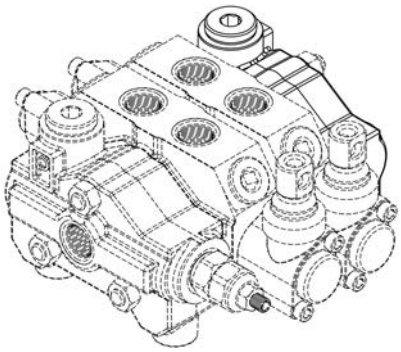

Type = SO

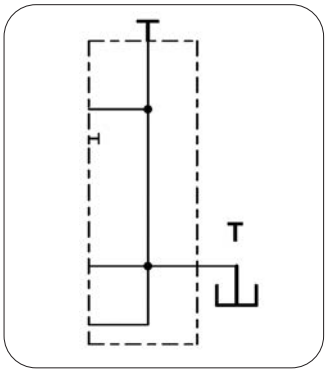

Type = TO

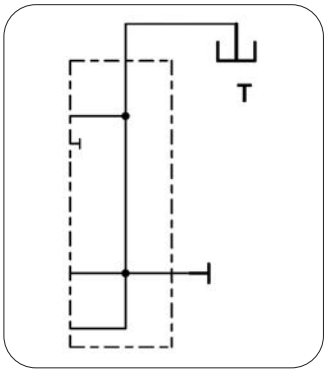

Type = TCO

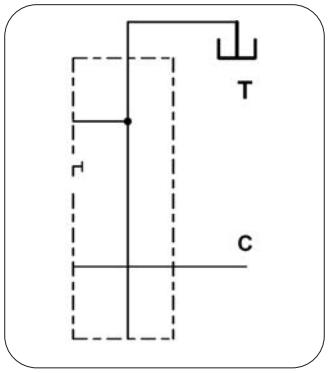

Type = TC

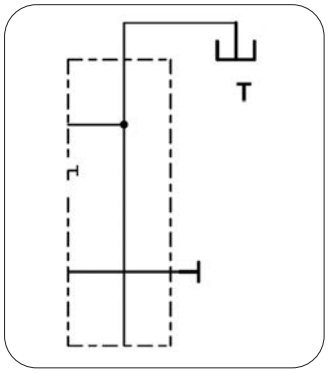

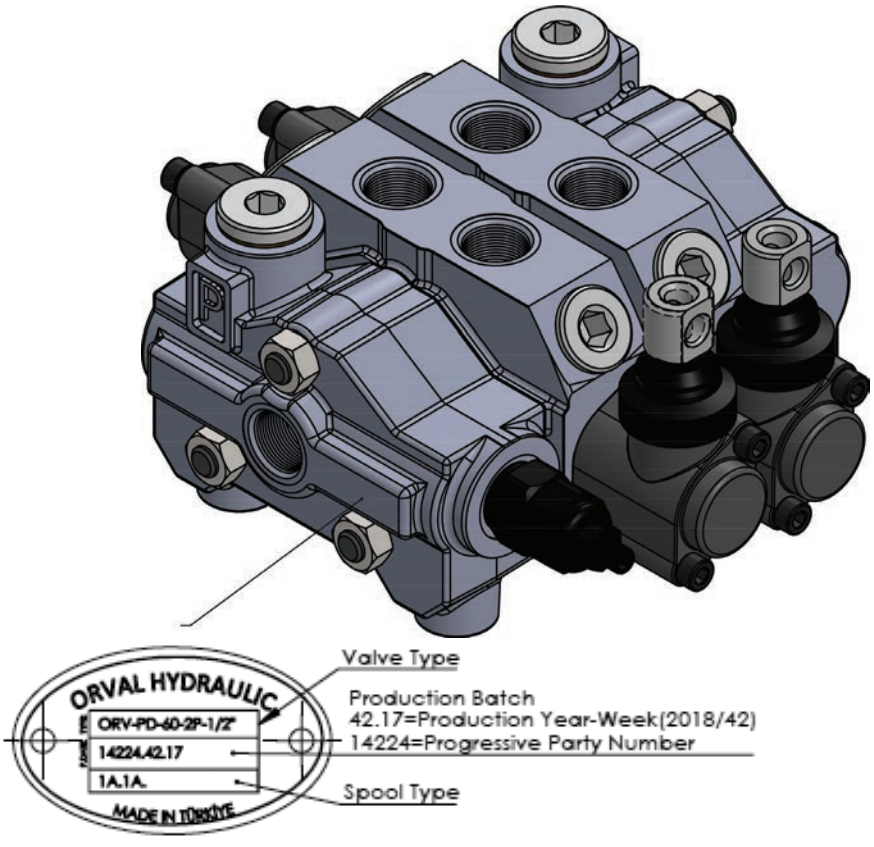

PERFORMANCE DATA AND CURVE

Open Center - Pressure Drop (P-T)

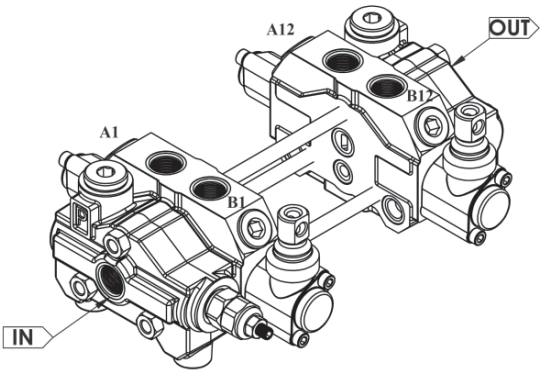

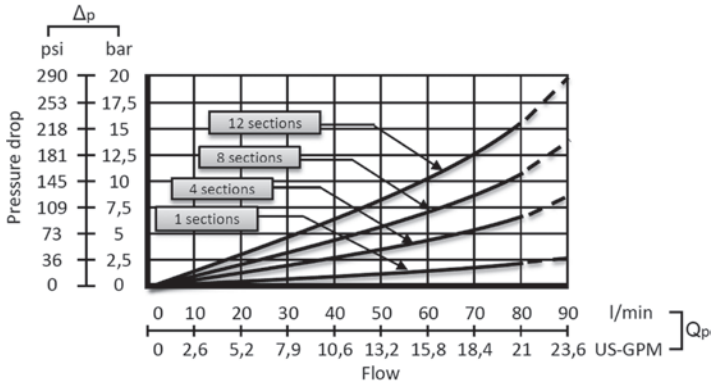

Inlet to Work Port - Pressure Drop (P-A/B)

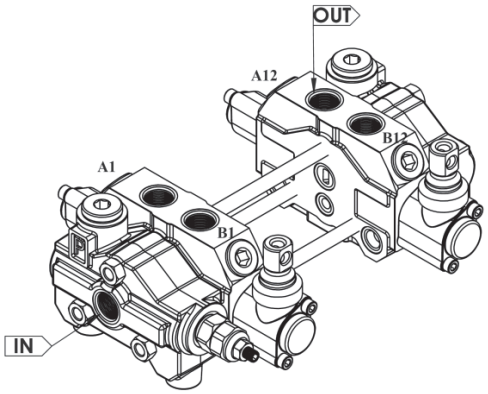

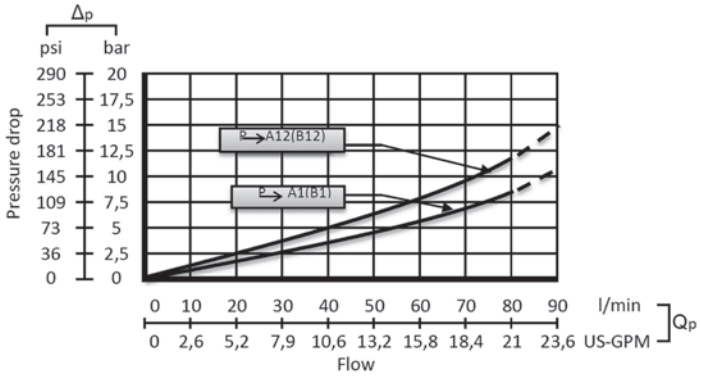

Work Port to Outlet - Pressure Drop (A/B-T)

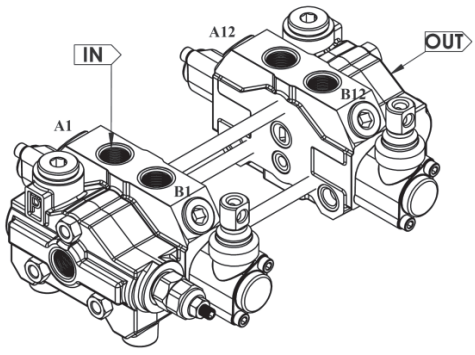

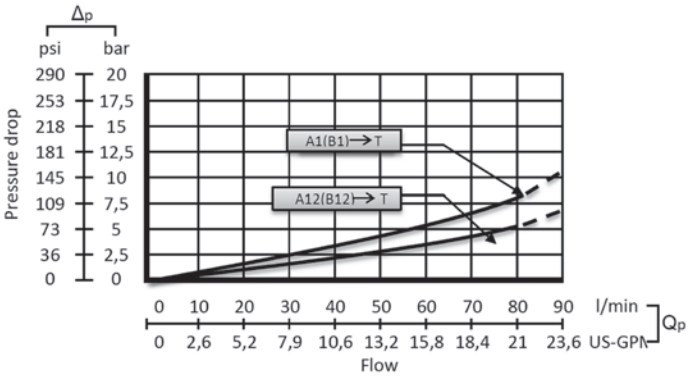

INLET RELIEF OPTIONS

Direct Pressure Relief Valve

Code:

SMR2 – 125

- **Pressure Setting Bar in (Standard 125 bar)**
- **Standard Main Relief Spring Type -2**

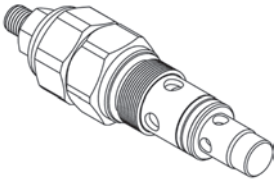

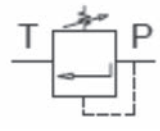

Performance Data

Spring Type Number: 1
Setting= 80 Bar -Range=63-125 Bar

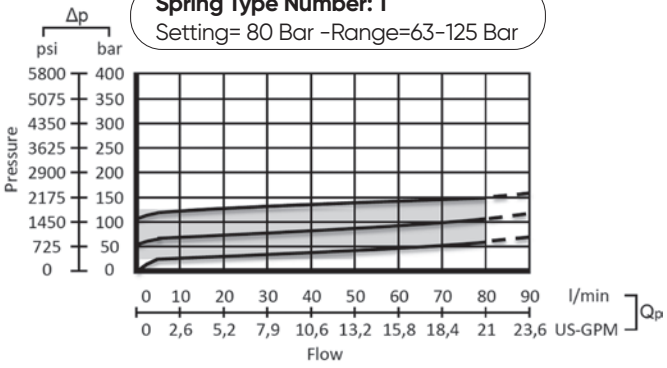

Spring Type Number: 2
Setting= 125 Bar -Range=100-165 Bar

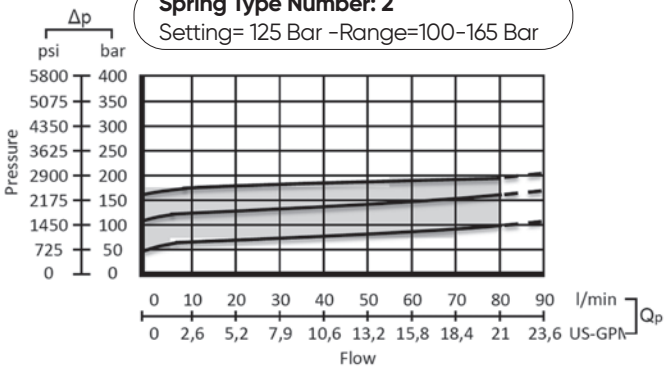

Spring Type Number: 3
Setting= 175 Bar -Range=125-250 Bar

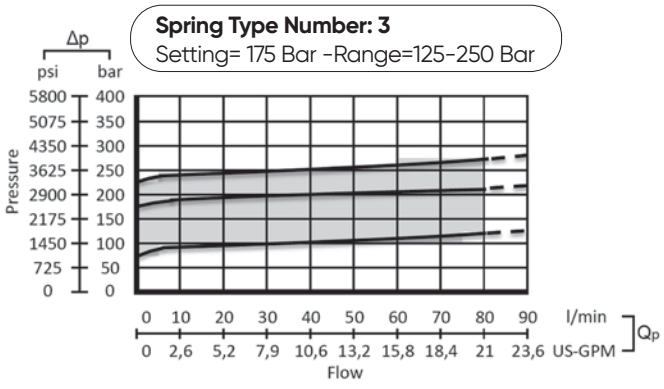

Spring Type Number: 4
Setting= 220 Bar -Range=200-315 Bar

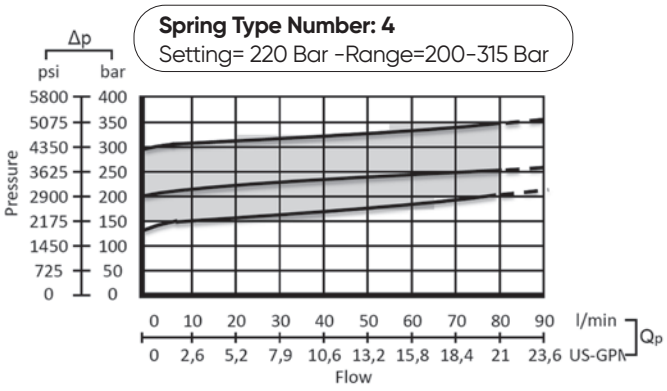

Adjustment Type on Valve

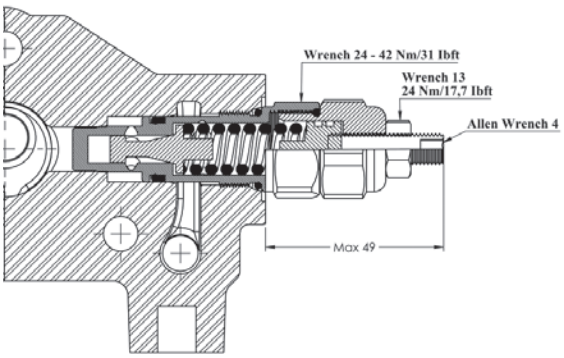

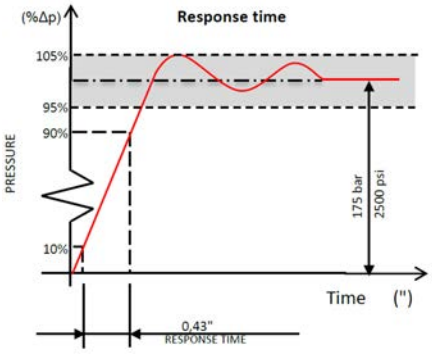

ORDERING CODES

Order Example

2.2 2.4 3.2

ORV PD60-2P (SD-SMR2-125-PP)/P-1A- STL- YAC-SR / P-1A-STL-45P / SO-PT1-CO / SGT

Base Code "0" | 1 | 1.2 | 1.4 | 2.1 | 2.3 | 2.6 | 1 st Section | Following Section | 3.1 | 3.3 | Output Section

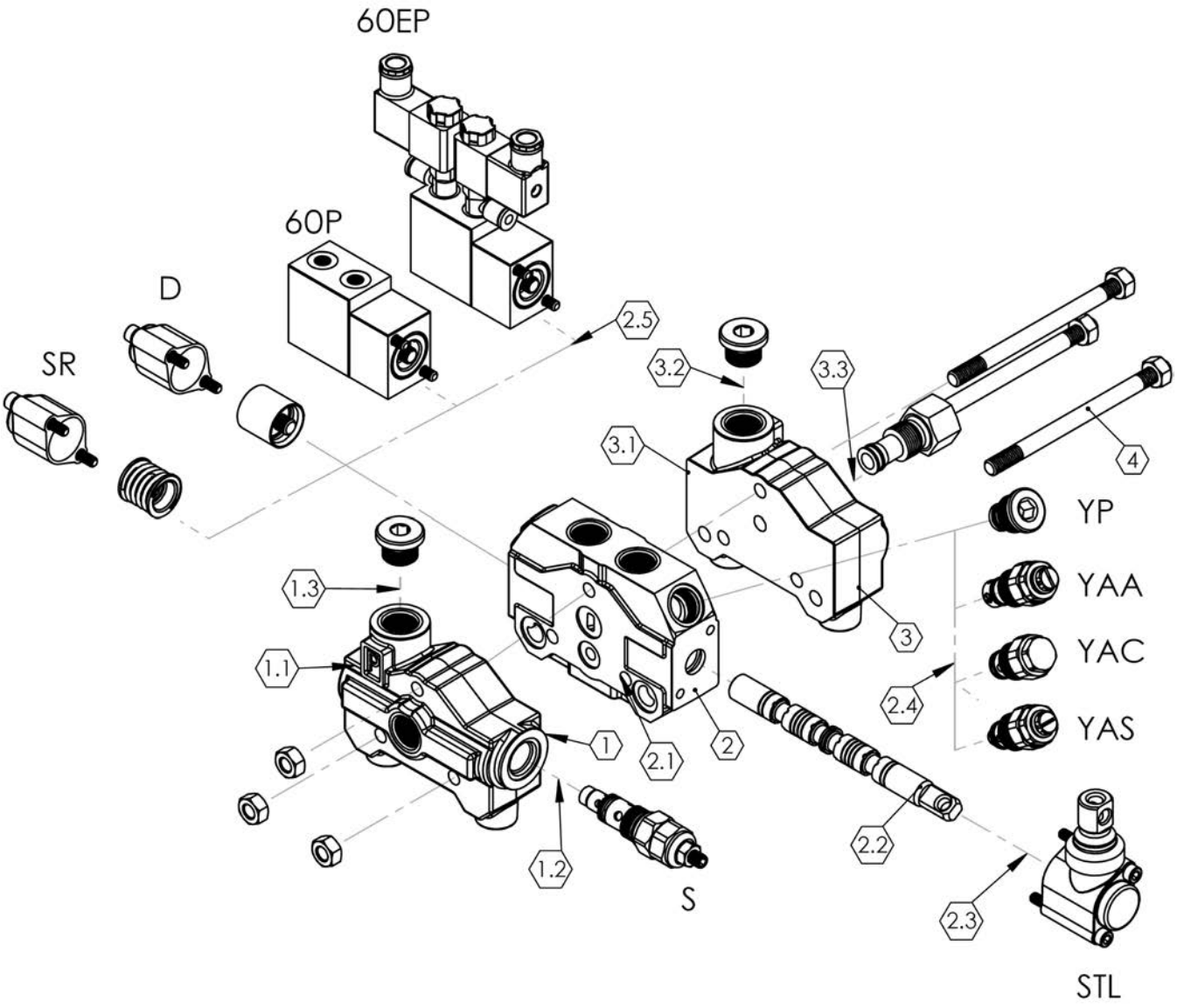

ORDERING CODES

1- Inlet Section

ORV PD60-2P PD60 = Valve Type-(PD)- Sectional
(60) - Max. Flow Rate
2P =Sections Quantity
SD = Side inlet with direct pressure relief valve (1SD60100)
TD = Top inlet with direct pressure relief valve (1TD60100)
SP = Side inlet with relief valve blanking plug (1SP60100)

2- Working Section

P = Parallel (2P60100)

3- Output Section

SO = Side outlet (3SO60100)
TO = Top outlet (3TO60100)
TCO = Top outlet with carry-over (3TCO60100)
TC = Top outlet with closed centre (3TC60100)

4- Assembling Kit

Tie rod kit for 1 section valve - (4TRK160100)
Tie rod kit for 2 section valve - (4TRK260100)
Tie rod kit for 3 section valve - (4TRK360100)
Tie rod kit for 4 section valve - (4TRK460100)
Tie rod kit for 5 section valve - (4TRK560100)
Tie rod kit for 6 section valve - (4TRK660100)
Tie rod kit for 7 section valve - (4TRK760100)
Tie rod kit for 8 section valve - (4TRK860100)
Tie rod kit for 9 section valve - (4TRK960100)
Tie rod kit for 10 section valve - (4TRK1060100)
Tie rod kit for 11 section valve - (4TRK1160100)
Tie rod kit for 12 section valve - (4TRK1260100)

5-6- O_Ring Kit

5. -17.00x2.65 NBR 70 SH O-Ring seal (3 Qty.) (5MK60100)
6. -22.40x2.65 NBR 70 SH O-Ring seal (1 Qty.) (6MK60100)

1.*-Inlet Options

1.1 Inlet Cover
Body = Standard (11BS60100)
1.2 Inlet Relief
SMR1-080 – (12SMR180080)–Range 63-125 bar
Setting 80 bar
SMR2-125 – (12SMR280125)– Range 100-160 bar
Setting 125 bar
SMR3-175 – (12SMR380175)– Range 125-250 bar
Setting 175 bar
SMR4-220 – (12SMR480220)–Range 200-315 bar
Setting 220 bar
1.3 Ports Plug
PA1 =G1/2 Top and side input - (13PA060100)
PA2= G3/4 Top and side input –(13PA260100)

2.*- Working Options

2.1 Working Section
PA = Without ports valve prearrangement, with parallel circuit - Body (21BSPA60100)
2.2 Spool Options
1A -(22SS45110) – 3 Positions ,Double acting
2A -(22SS45120) – 3 Positions ,Double acting
A to tank B Blocked
3A -(22SS45130) – 3 Positions ,Double acting
B to tank A blocked
4A -(22SS45140) – 3 Positions ,Double acting
A and B tank
5A -(22SS45150) – 3 Positions ,Single acting on
A (A to tank)
6A -(22SS45160) – 3 Positions ,Single acting on
B (B to tank)
2.3 Lever Options
L = Standard HandLever (L=120mmxM8) - (7L040100)
JL =Joystick lever for two sections operation (5JL 080100)
STL = Standard Lever –(23STL80100)
HL = Remote Cable Kit – (80HL80100)
2.4 Port Relief Valves
Anti-Shock Valve
YAS (T1-50) – (24YAC80050)–Range 35-70 bar
Setting 50 bar
YAS (T1-100) – (24YAC80100)–Range 63-220 bar
Setting 100 bar
YAS (T1-200) – (24YAC80200)–Range 180-350 bar
Setting 200 bar
Anti-Shock and Anti-Cavitation Valve
YAA (T1-63) – (24YAA80063)–Range 35-70 bar
Setting 50 bar
YAA (T1-100) – (24YAA80063)–Range 63-220 bar
Setting 100 bar
YAA (T1-200) – (24YAA80063)–Range 180-350 bar
Setting 200 bar
YAC - Anti Cavitation– (24YAS80100)
YP- A and B ports valve blanking plug (24YP80100)
DST-A and B ports valve blanking plugs with
connection to tank–(24DST80100)
2.5 Spool Positioners
SR=Spring Return in neutral position – (26SR80100)
D =Detent in position 1, neutral and 2 -(26D80100)
60P=ON/OFF Pneumatic – (2645P150100)
60EP=12 VDC ON/OFF electro-pneumatic
(2645EP150112)
60EH= 12 VDC/24 VDC ON/OFF electro-hydraulic
(3645EH100112)
SOC = 12 VDC/24 VDC ON/OFF solenoid control
(46SOC100112)

3.*- Working Options

3.1 Working Section
Body = Standard (31BS80100)
3.2 Output Plug
PT1 =G1/2 Top and Side output (32PT180100)
3.3 Circuits Options
CO =G1/8 Carry–Over Connector (33CO80100)

SPOOL OPTIONS

Spool Type - 1A

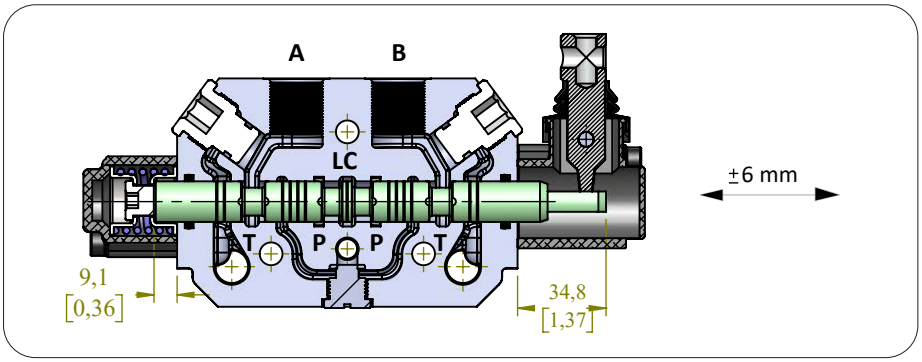

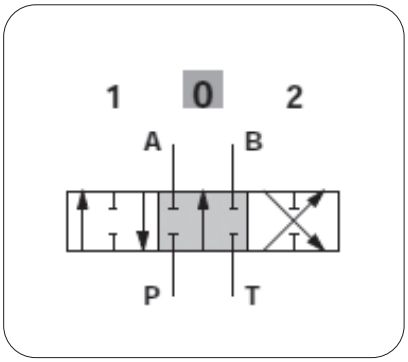

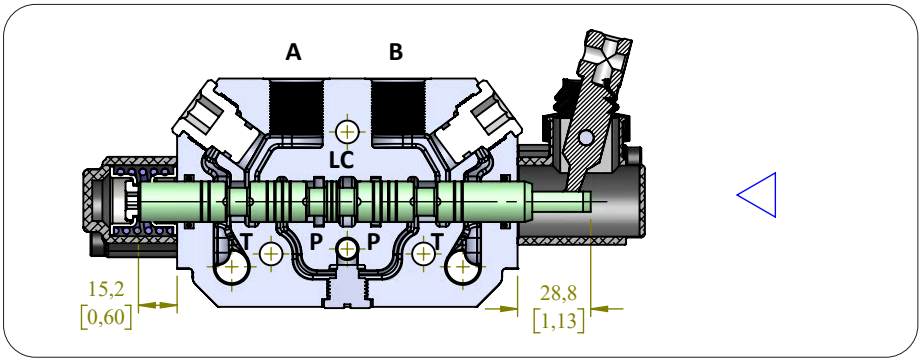

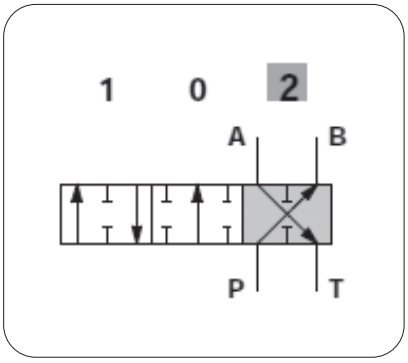

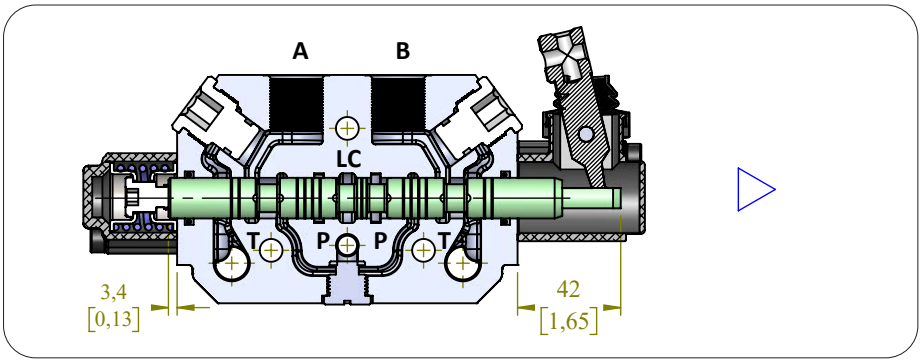

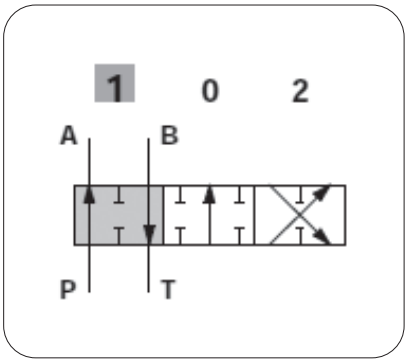

Performance Curve And Data

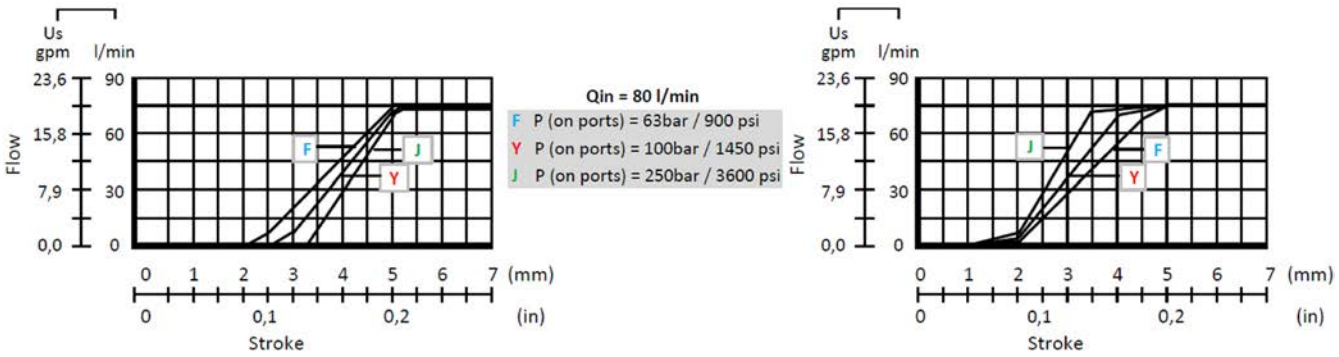

SPOOL OPTIONS

Spool Type - 2A

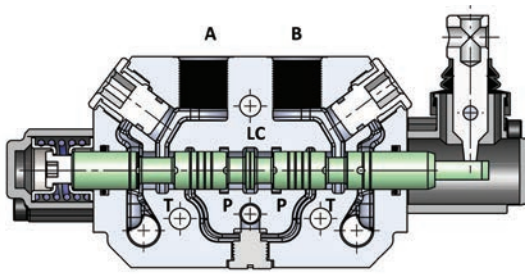

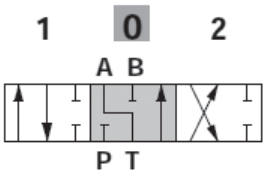

Spool Type - 3A

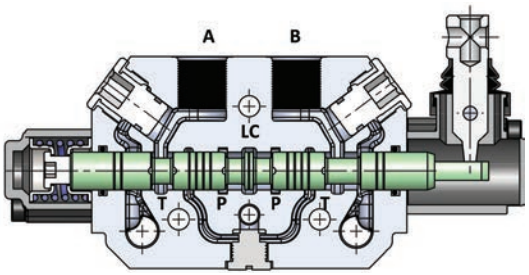

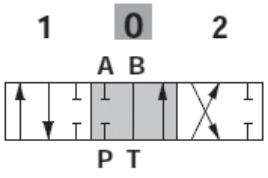

Spool Type - 4A

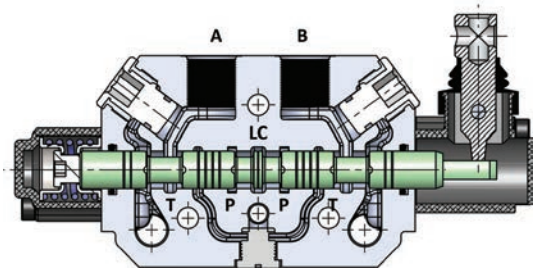

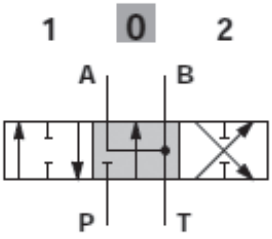

Spool Type - 5A

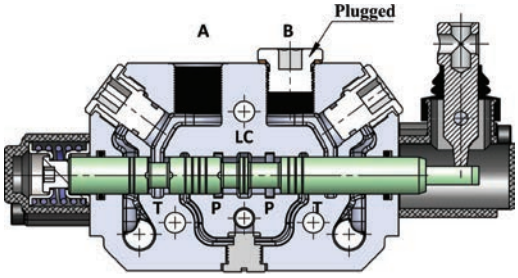

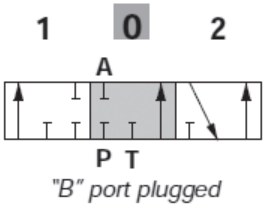

"B" port plugged

Spool Type - 6A

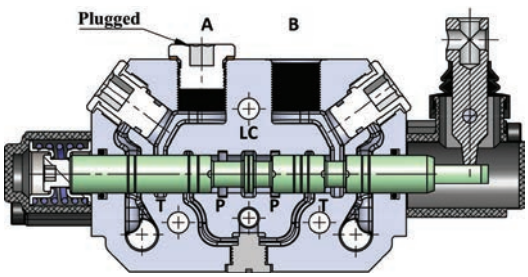

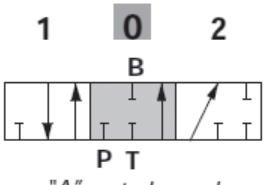

"A" port plugged

SPOOL POSITIONERS – SIDE OF RETURN

With Spring Return in Neutral Position

Kit No: **SR**

Sectional Appearance

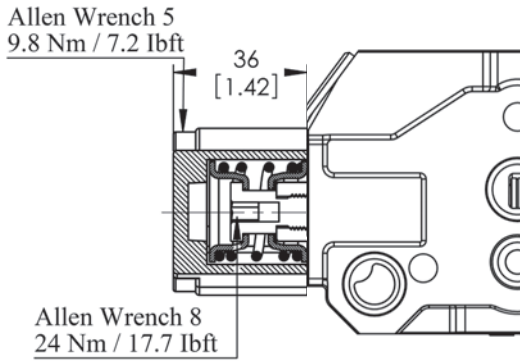

Diagram



With Detent

Kit No: **D**

Sectional Appearance

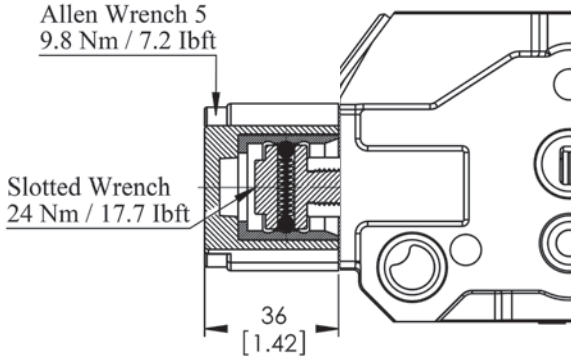

Diagram

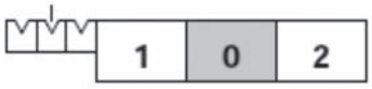

Force - stroke diagram

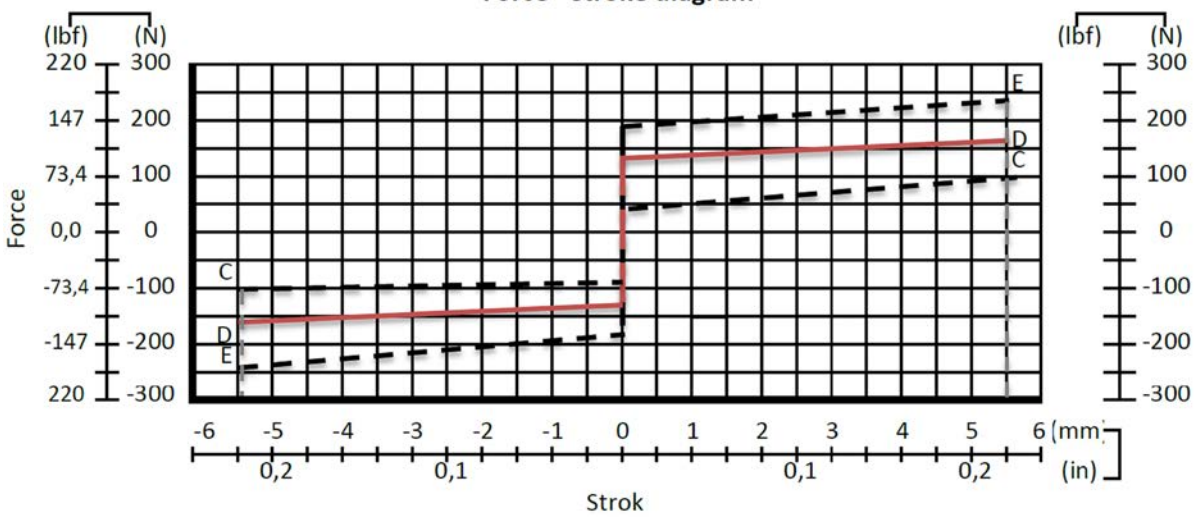

SPOOL POSITIONERS – SIDE OF RETURN

ON/OFF Pneumatic Control

Kit No: **60P**

Sectional Appearance

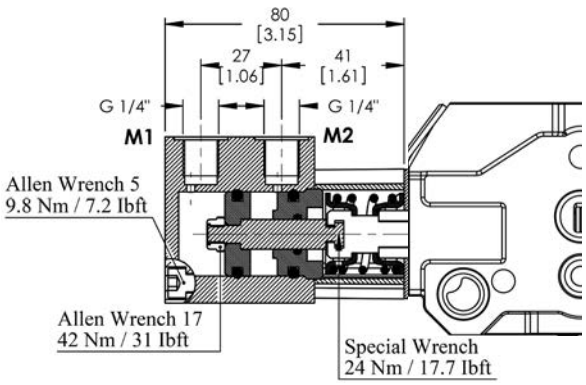

Diagram

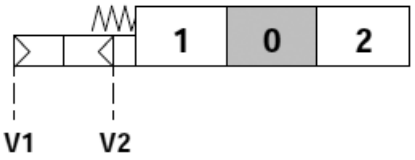

Operating Features
Pilot Pressure .....: 6 Bar (Max. 10) / 87 Psi (Max. 145)

ON/OFF Electro-Pneumatic Control

Kit No: **60EP**

Sectional Appearance

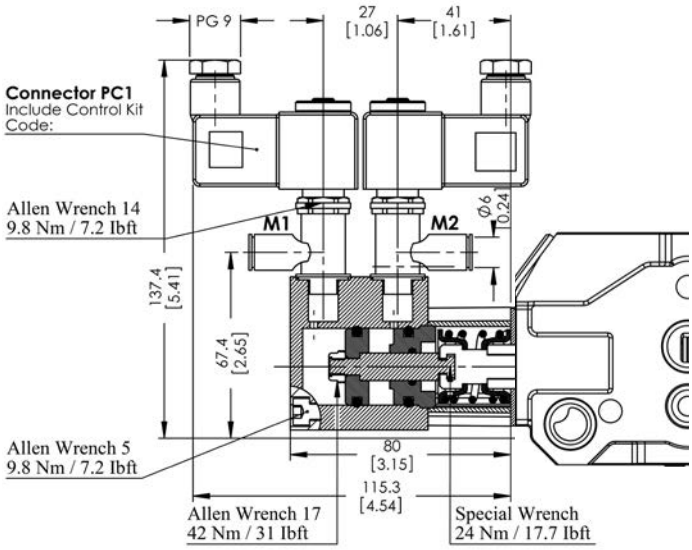

Diagram

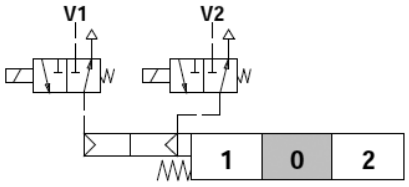

Operating Features
Pilot Pressure .....: 6 Bar (Max. 10) / 87 Psi (Max. 145)
Selenoid Operating Features
Nominal Voltage.....: 12VDC / 24 VDC
Power Rating.....: 6 W

SPOOL POSITIONERS – SIDE OF RETURN

ON/OFF Electro - Hydraulic Control

Kit No: **60EH**

Sectional Appearance

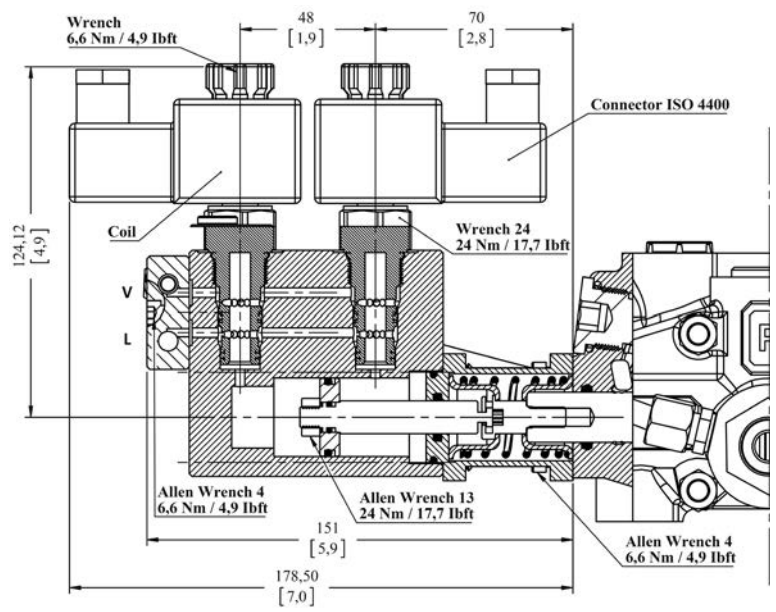

Diagram

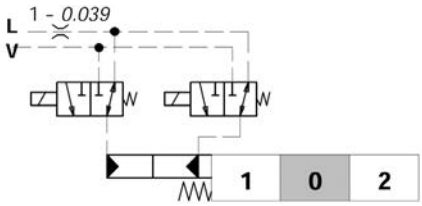

Operating Features

Pilot Pressure .....: 10 Bar / 145 Psi
: 50 Bar / 725 Psi
Max back pressure on drain L....:25 Bar / 360 Psi

Selenoid Operating Features

Coil Connection.....: ISO 4400
Nominal voltage.....: 12 VDC / 24 VDC
Power rating.....: 21 W
Duty cycle.....: %100
Protection type.....: IP 65
Nominal voltage tolerance.....: ±10
Max temperatures.....: 100 C°
Stroke.....: ±5,5 mm

ORDER CODE

External Pilot Collector
COL 11 - 10COL1001 – Kit For Section 1
COL 12 - 10COL1001 – Kit For Section 2
COL 13 - 10COL1001 – Kit For Section 3
COL 14 - 10COL1001 – Kit For Section 4
COL 15 - 10COL1001 – Kit For Section 5
COL 16 - 10COL1001 – Kit For Section 6
COL 17 - 10COL1001 – Kit For Section 7
COL 18 - 10COL1001 – Kit For Section 8

Standard Pilot Collector
COL 21 - 10COL2001 – Kit For Section 1
COL 22 - 10COL2001 – Kit For Section 2
COL 23 - 10COL2001 – Kit For Section 3
COL 24 - 10COL2001 – Kit For Section 4
COL 25 - 10COL2001 – Kit For Section 5
COL 26 - 10COL2001 – Kit For Section 6
COL 27 - 10COL2001 – Kit For Section 7
COL 28 - 10COL2001 – Kit For Section 8

SPOOL POSITIONERS – SIDE OF RETURN

ON/OFF Electro - Hydraulic Control Connections

Connection Type 1: **Collector kit for external pilot and drain**

Sectional Appearance

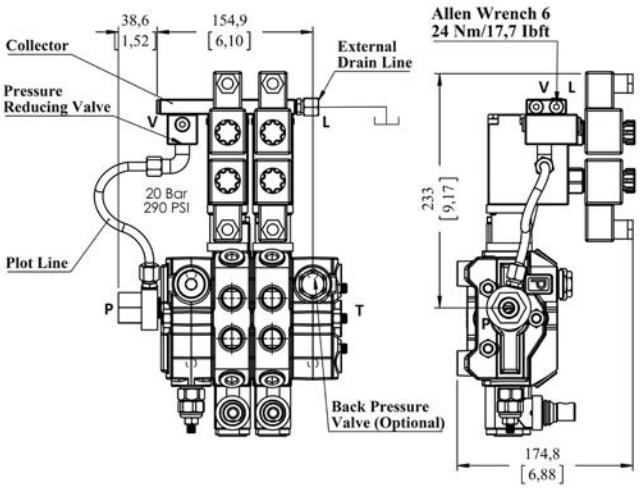

Diagram

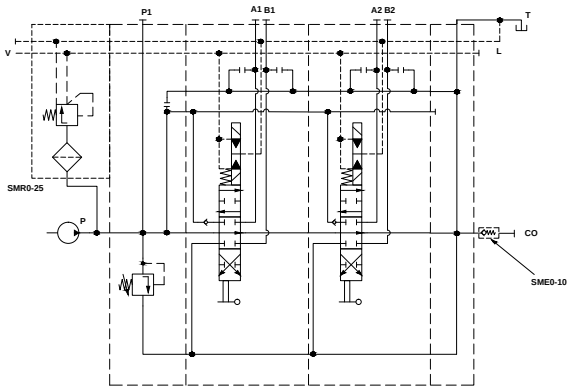

Operating Features
External Pressure Reducing Valve .....: 20 Bar / 290 Psi (For V line)
Code= ORV PD60-2P (SD(LA)-SMR2-125-PP)/P-1A-STL-60EH/ P-1A-STL-60EH (SMR0 -COL12-12V)/ SO-PT1 / SGT

Connection Type 2: **Collector kit with pilot and drain lines**

Sectional Appearance

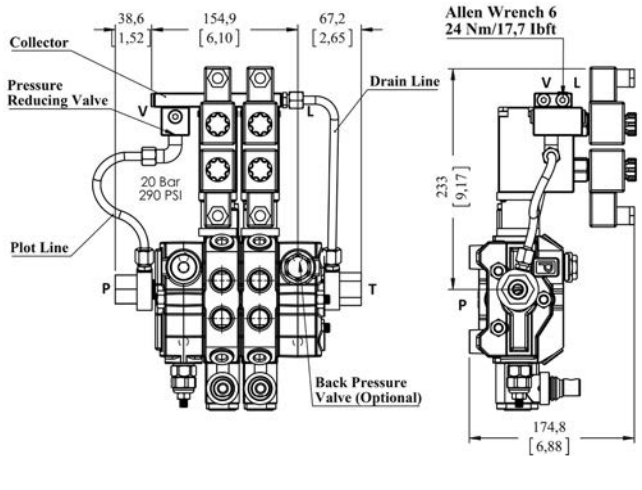

Diagram

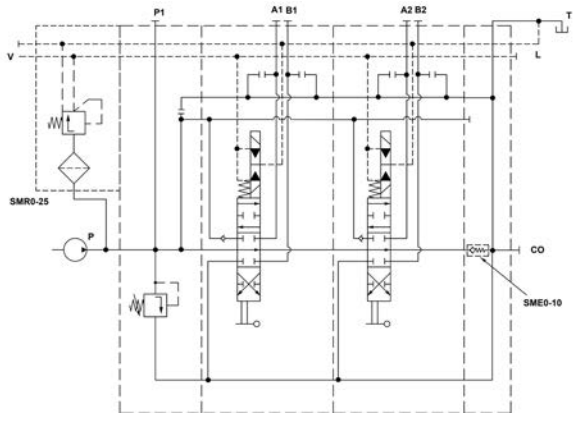

SMR 0-25 Valve Operating Features (Pressure reducing valve)
Outlet Pressure .....: 20 Bar / 290 Psi
Max. Flow.....: 8 l/min
Filtering .....:80 µ
Code= ORV PD60-2P (SD(LA)-SMR2-125-PP)/P-1A-STL-60EH/ P-1A-STL-60EH (SMR0 –COL22-12V)/ SO-PT1 / SGT

WORKING SECTION KIT

With Port Valves Type

Kit No: **P**

Sectional Appearance

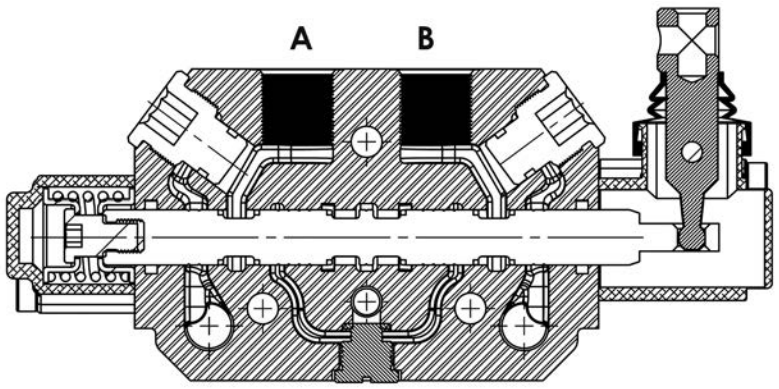

Diagram

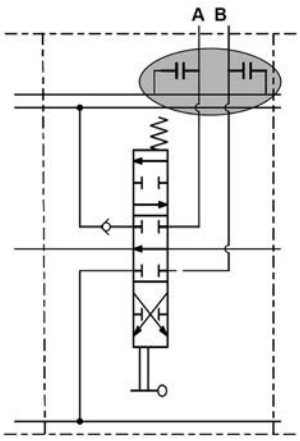

With Port Valves Type

Kit No: **PA**

Sectional Appearance

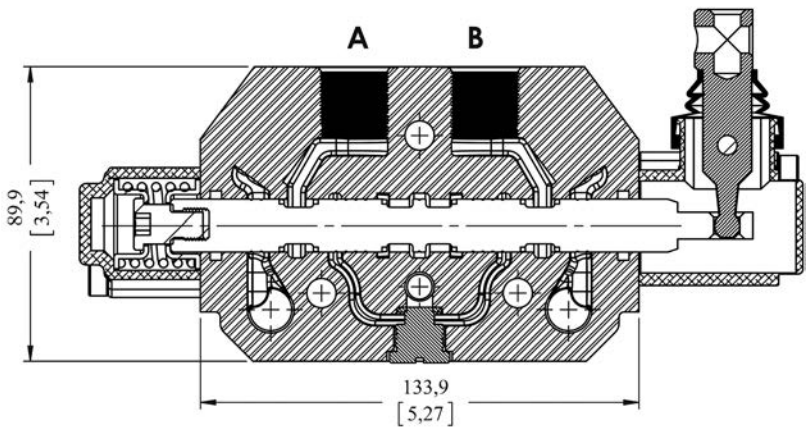

Diagram

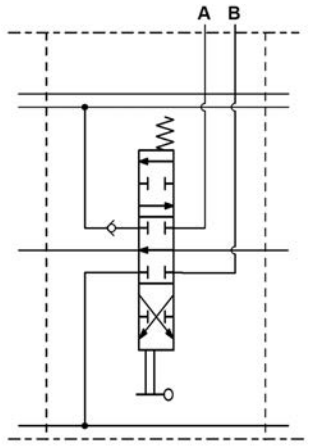

SPOOL POSITIONERS – SIDE OF LEVER CONTROL

Lever Controls

Kit No: **STL - L0**

Sectional Appearance

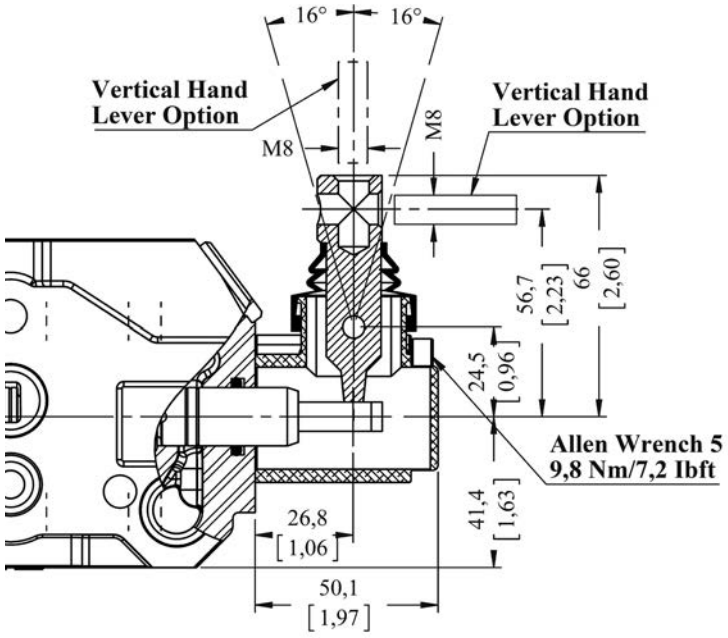

Diagram

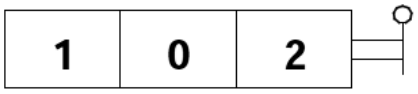

Kit No: **STL - L180**

Sectional Appearance

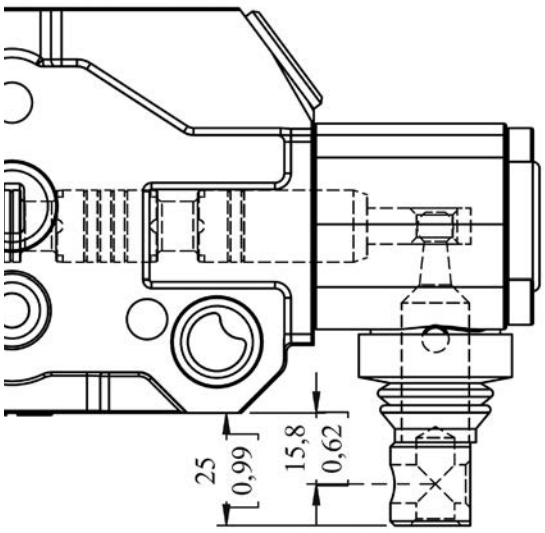

Diagram

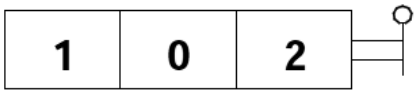

Note: Arm lever pivot box is aluminium cap protected. And it can be rotated 180º.

SPOOL POSITIONERS – SIDE OF LEVER CONTROL

Lever Controls - Joystick

Kit No: **JL**

Exploded View | Diagram

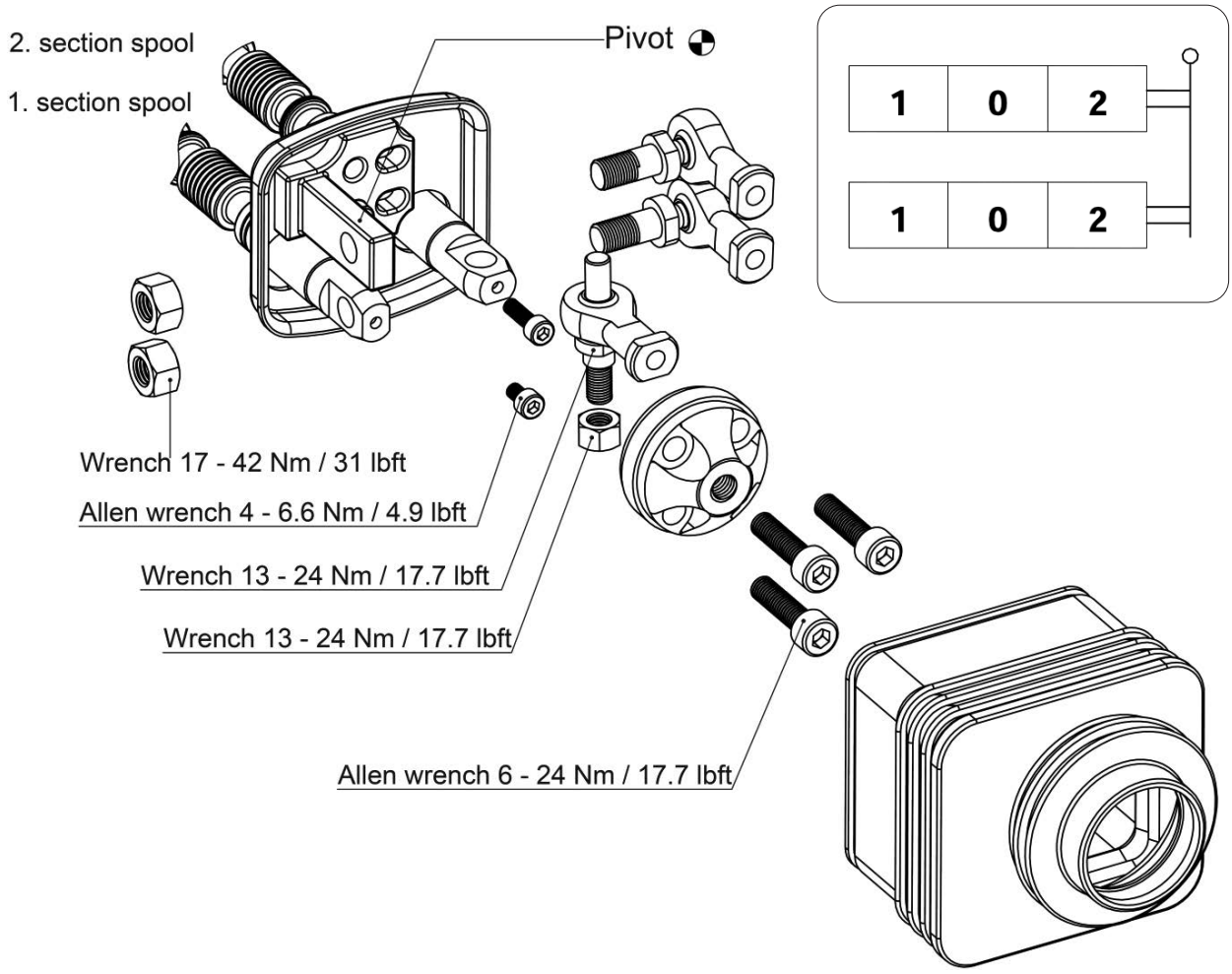

Operation Angle:

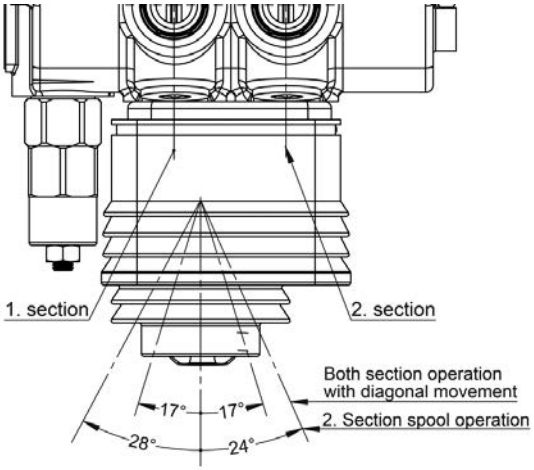

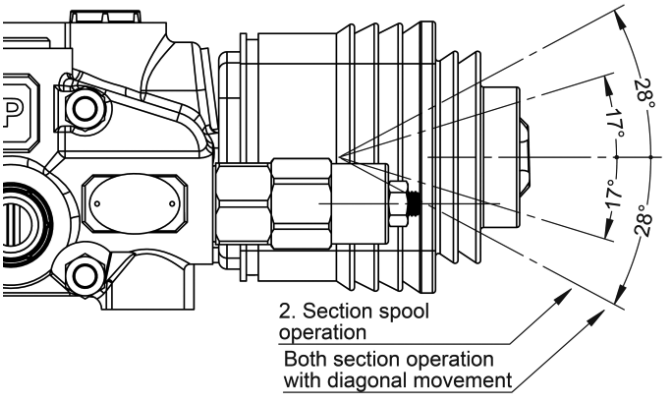

SPOOL POSITIONERS – SIDE OF LEVER CONTROL

Lever Controls - Joystick

Dimensions and movement sceme

Type No: **JL1** — **Application:** Pivot placed down on the Left

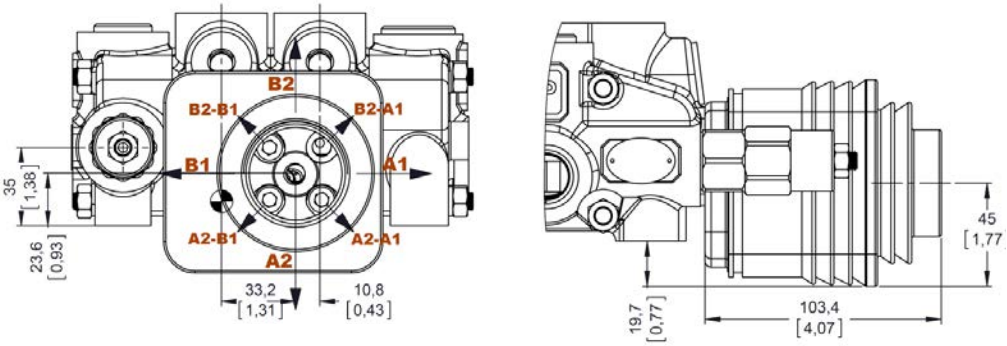

Type No: **JL2** — **Application:** Pivot placed down on the right

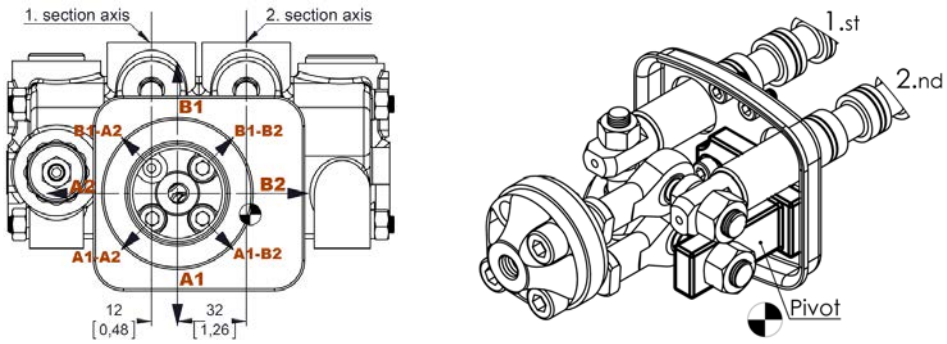

Type No: **JL3** — **Application:** Pivot placed above on the Left

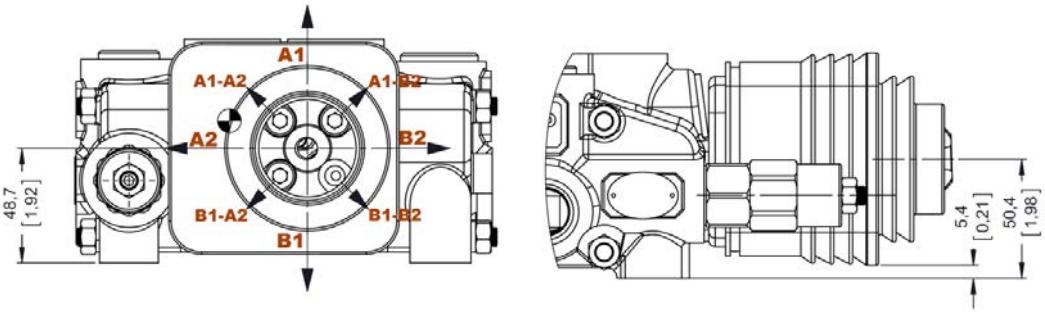

Type No: **JL4** — **Application:** Pivot placed above on the right

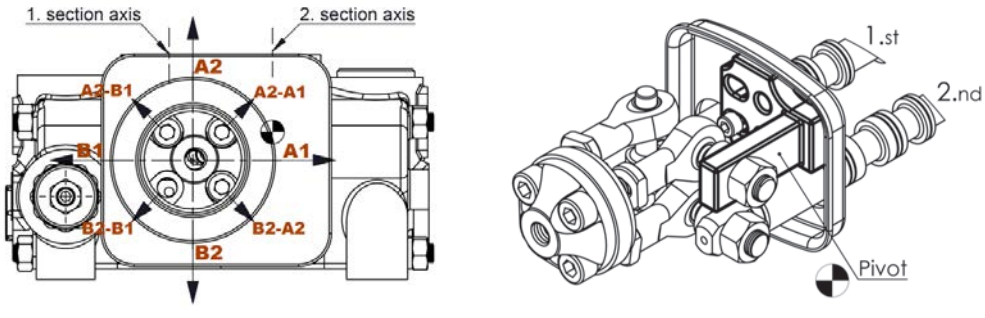

SPOOL POSITIONERS – SIDE OF LEVER CONTROL

Lever Controls - Cable Control

Kit No: **HL**

Sectional Appearance | Diagram

Waterproof cap prearranged for remote control with flexible cable.

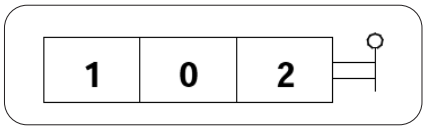

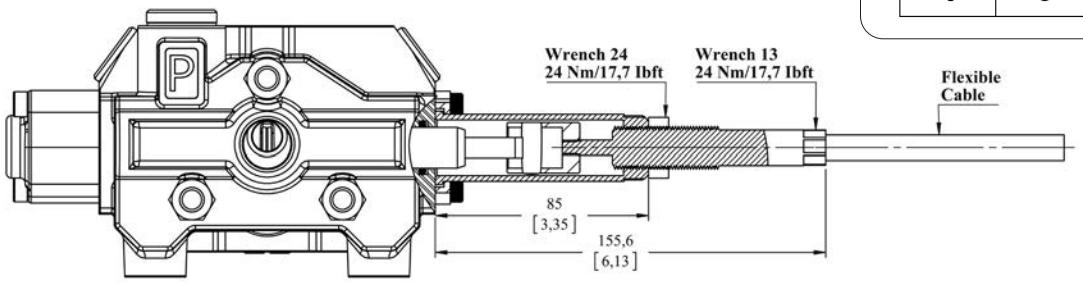

Note: Remote cable control is several options. Please indicte the cable length demanded and contact our sales department.

Example Operation

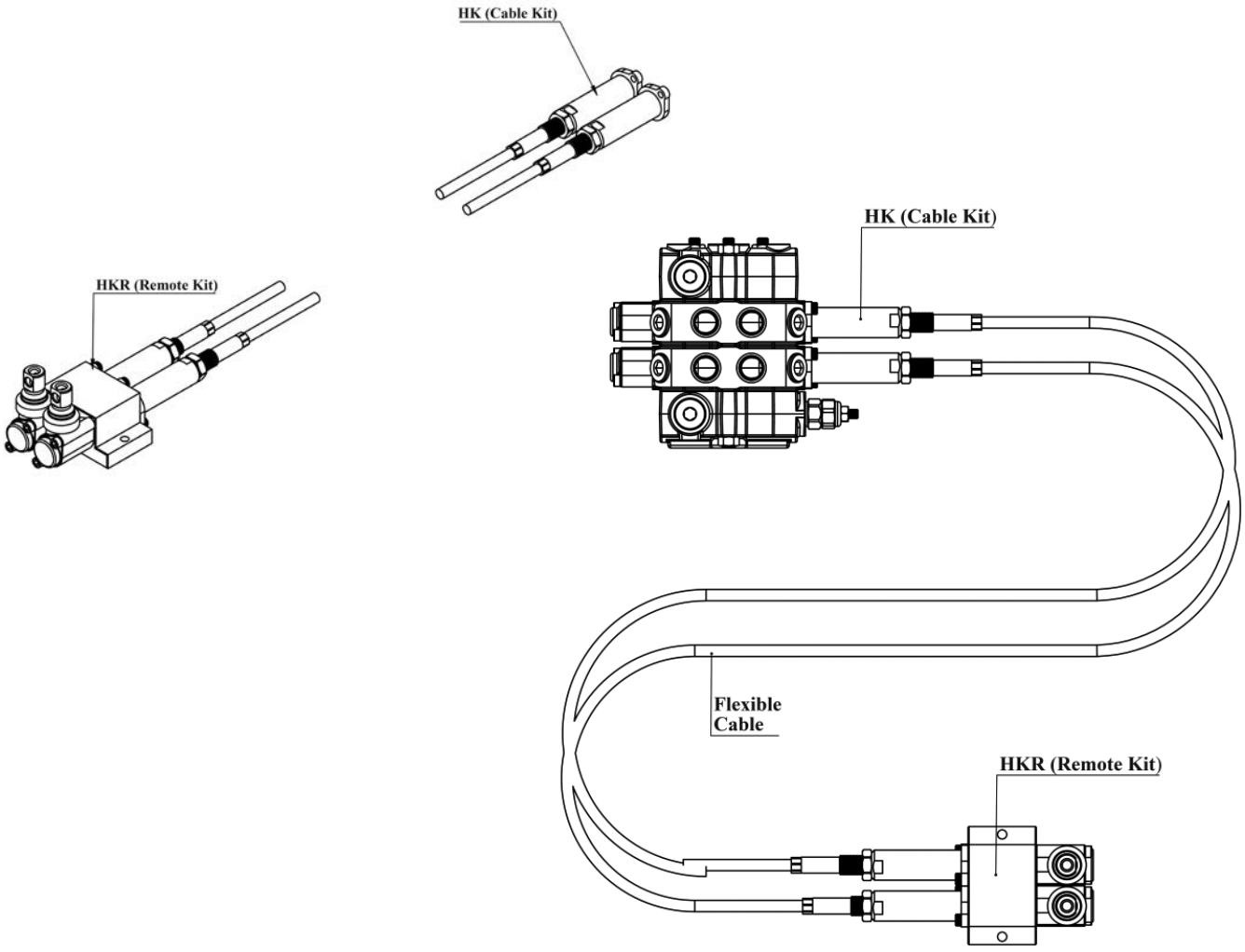

COMPLETE CONTROL – ON / OFF SOLENOID CONTROL

ON/OFF Solenoid Control

Kit No: **SEC**

Sectional Appearance

Electric wiring example

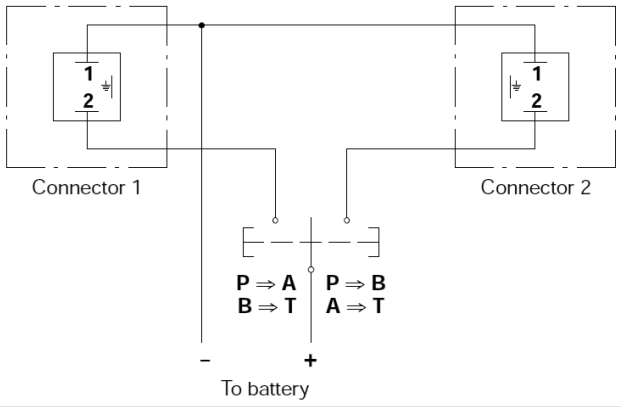

Diagram

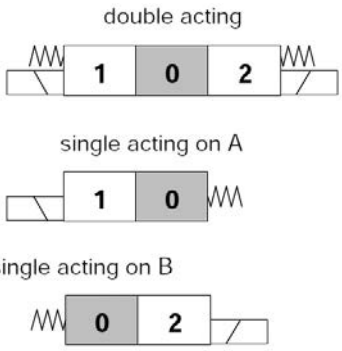

Operating Features

Max Working Pressure.....: 230 Bar / 3300 Psi
Max back pressure .....: 5 Bar / 80 Psi
Internal Lekage.....: 10 cm3 / min

Selenoid Operating Features

Nominal voltage.....: 12 VDC / 24 VDC
Power rating.....: 36 W
Duty cycle.....: %100
Nominal voltage tolerance.....: ±10
Coil insulation .....: Class H
Stroke.....: ±3

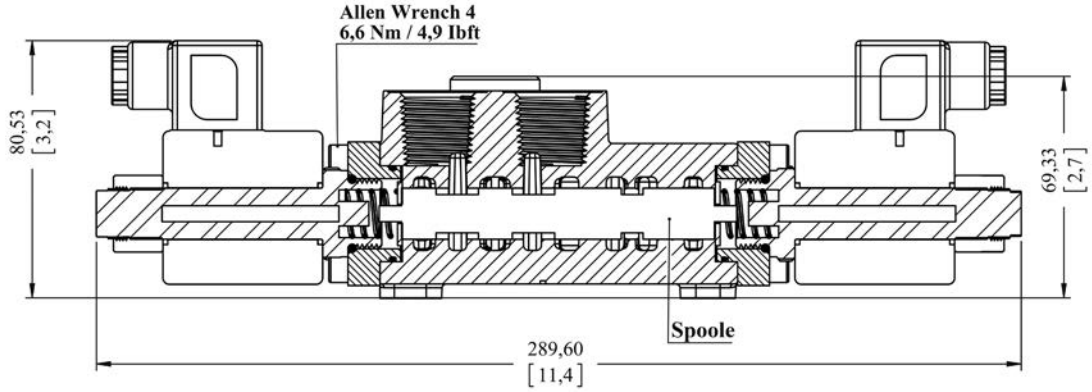

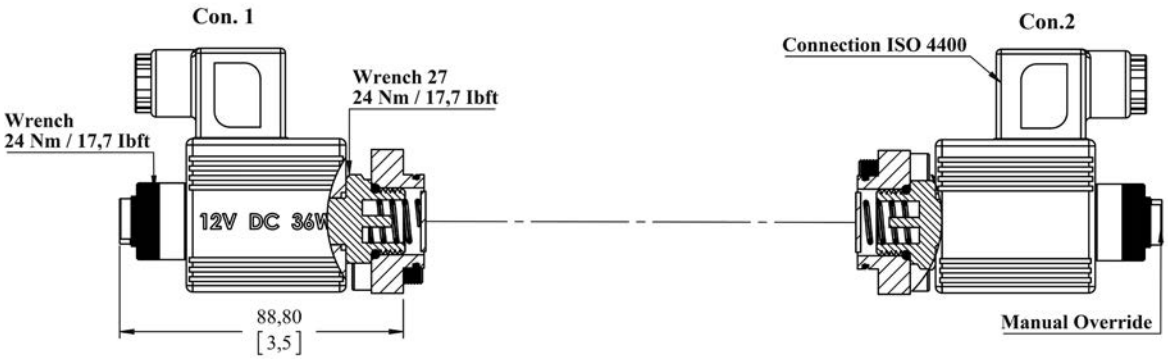

OUTLET COVER - TANK SIDE

Output Cover Options

Kit No: **SO**

Sectional Appearance

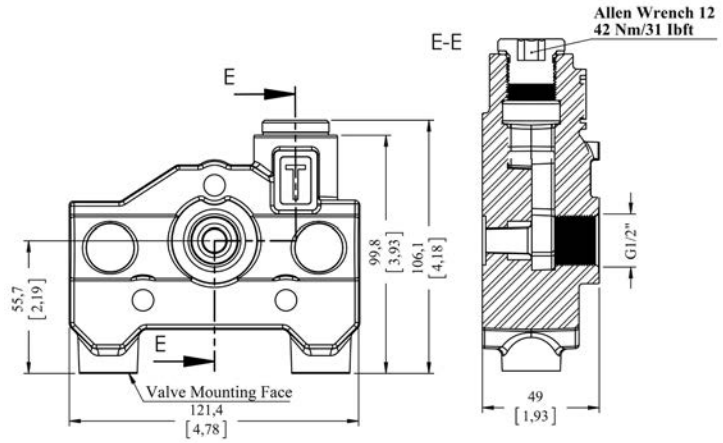

Kit No: **TO**

Sectional Appearance

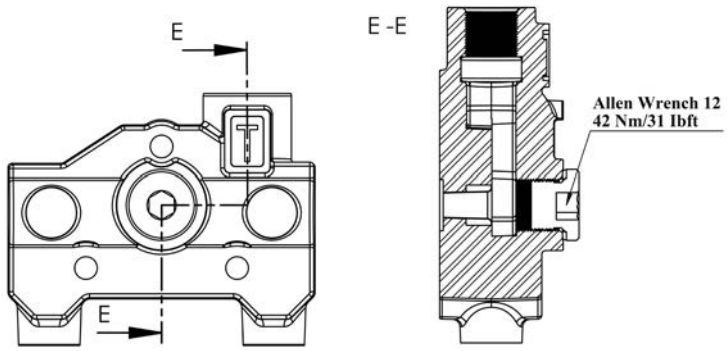

Hydraulic Diagram

Type No: **SO**

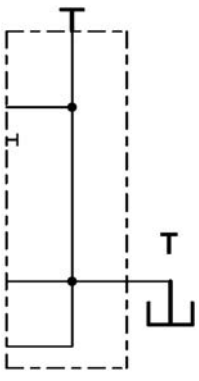

Type No: **TO**

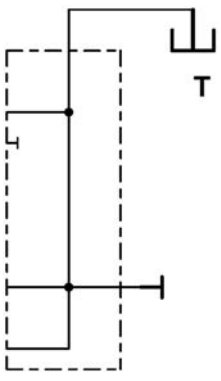

OUTLET COVER - TANK SIDE

Output Cover Options

Kit No: **TCO**

Sectional Appearance

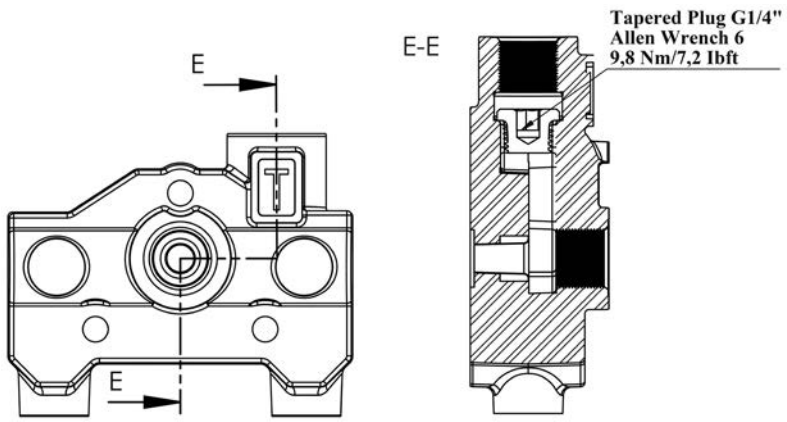

Kit No: **TC**

Sectional Appearance

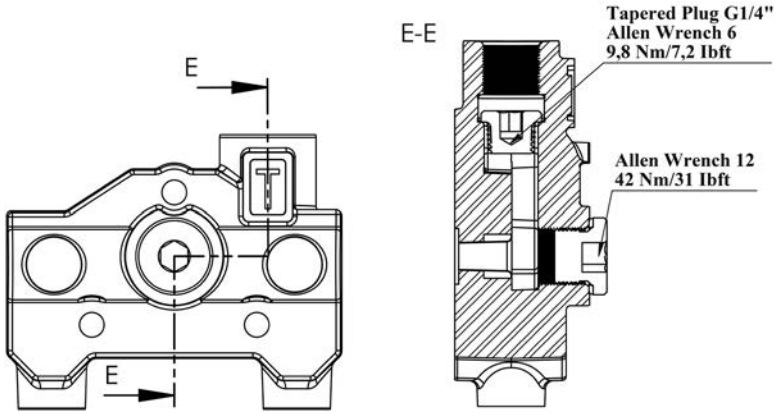

Hydraulic Diagram

Type No: **TCO**

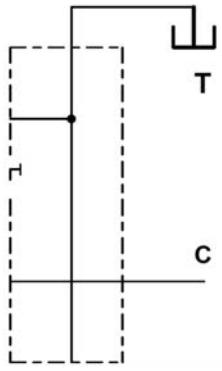

Type No: **TC**

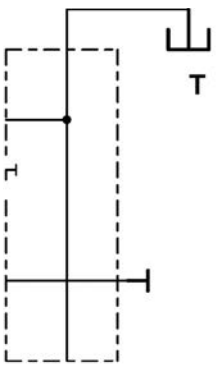

PORT VALVES OPTIONS

Anti Shock Valves

Code:

YAS-1 (T1-100)

- **Pressure Setting in Bar**
- **Adjusting type T=With screw , L=Valve Set / Spring Type (1,2,3)**
- **1 = Mounted Port A , 2 = Mounted Port B , 3 = Mounted Port A and B**

Hydraulic Diagram

Kit No: **YAS1**

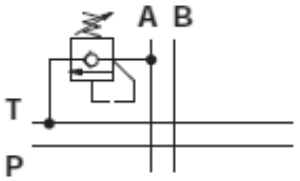

Kit No: **YAS2**

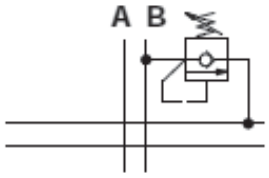

Kit No: **YAS3**

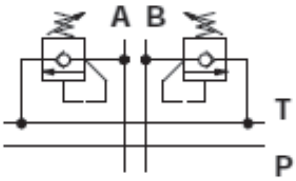

Adjustment Type on Valve:

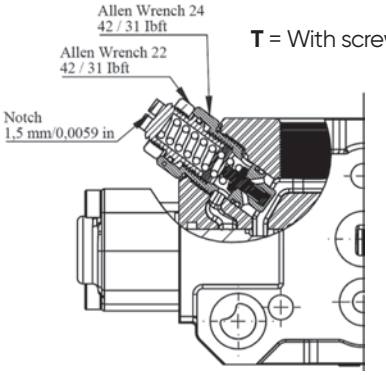

T = With screw

L = Valve set

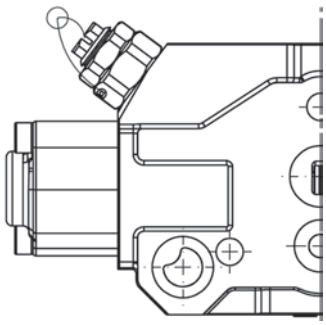

Performance Data:

Spring No=1 , Setting 50 bar / 725 psi

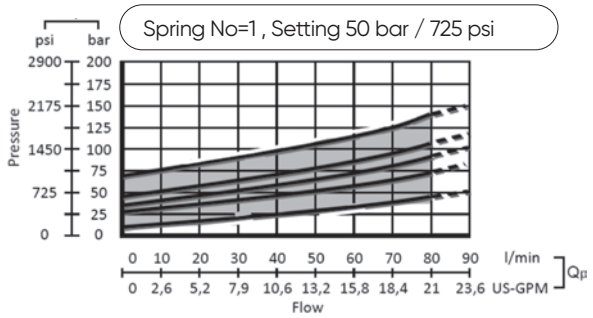

Spring No=2 , Setting 100 bar / 1450 psi

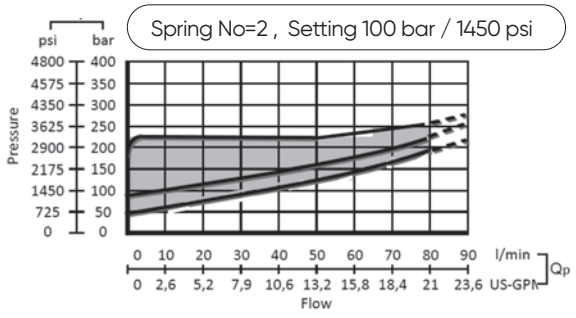

Spring No=3 , Setting 200 bar / 2900 psi

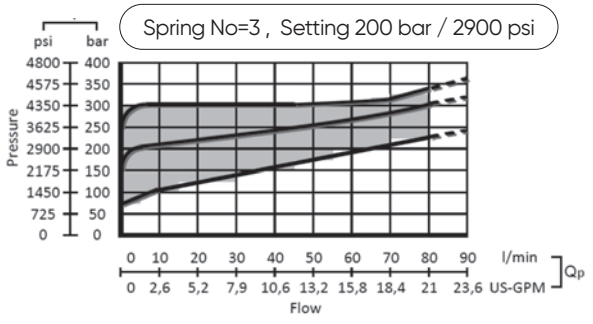

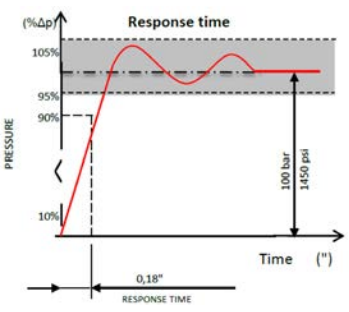

PORT VALVES OPTIONS

Anti shock And Anti Cavitation Valves

Code:

YAA-1 (T1-100)

- **Pressure Setting in Bar**
- **Adjusting type T=With screw , L=Valve Set / Spring Type (1,2,3)**
- **1 = Mounted Port A , 2 = Mounted Port B , 3 = Mounted Port A and B**

Hydraulic Diagram

Kit No: **YAA1**

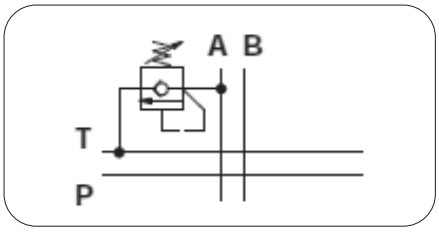

Kit No: **YAA2**

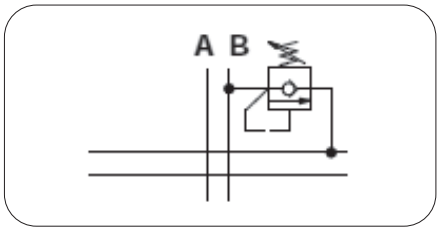

Kit No: **YAA3**

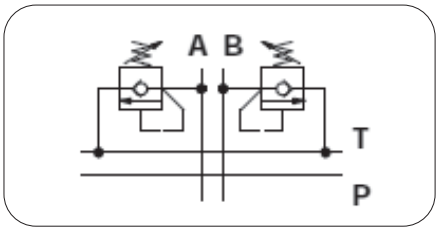

Adjustment Type on Valve:

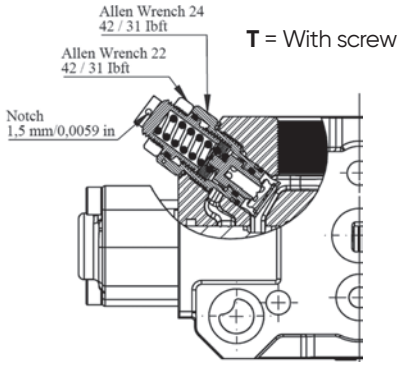

T = With screw

L = Valve set

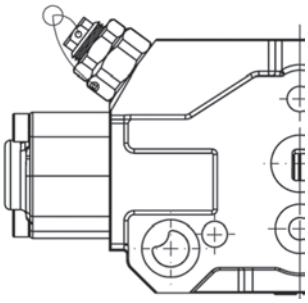

Performance Data:

Spring No=1 , Setting 63 bar / 900 psi

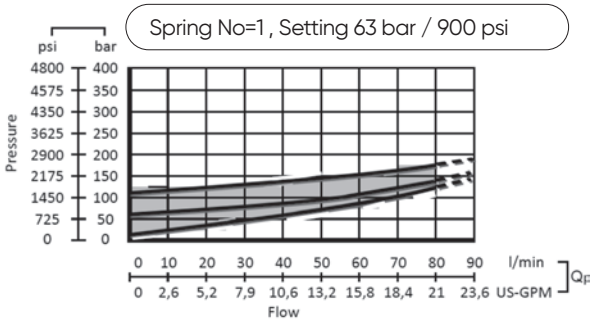

Spring No=2 , Setting 100 bar / 1450 psi

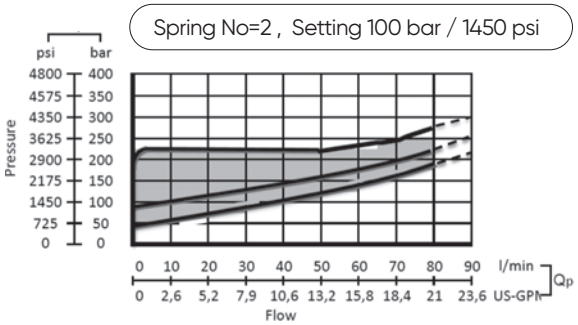

Spring No=3 , Setting 200 bar / 2900 psi

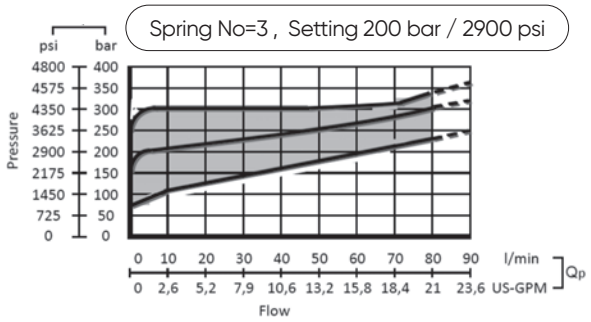

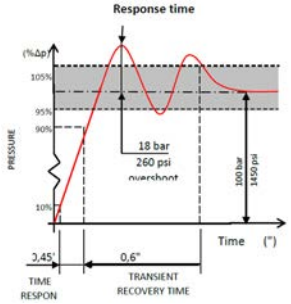

PORT VALVES OPTIONS

Anti Cavitation Valves

Code:

YAC-1 → **1 =** Mounted Port A , 2=Mounted Port B , 3=Mounted Port A and B

Hydraulic Diagram

Kit No: **YAC1**

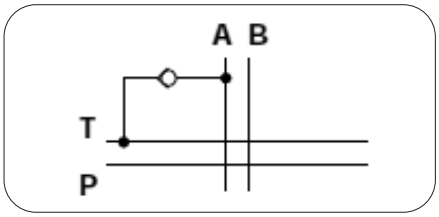

Kit No: **YAC2**

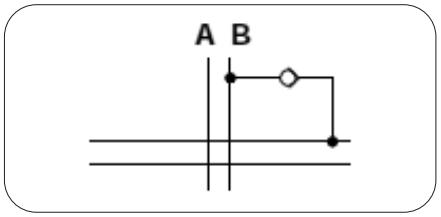

Kit No: **YAC3**

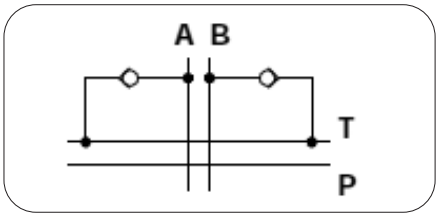

Adjustment Type on Valve And Data:

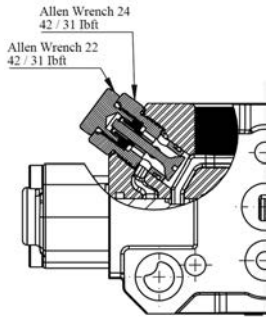

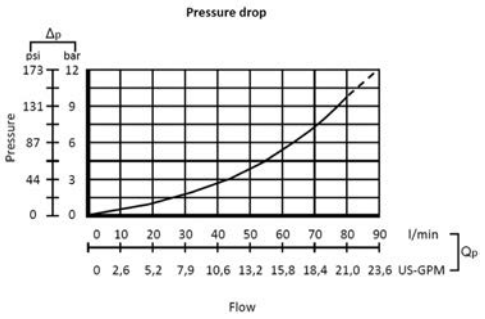

Valve Blanking

Plug with tank connection

DST-1 (1:Mounted port A – 2:Mounted port B)

Sectional Appearance

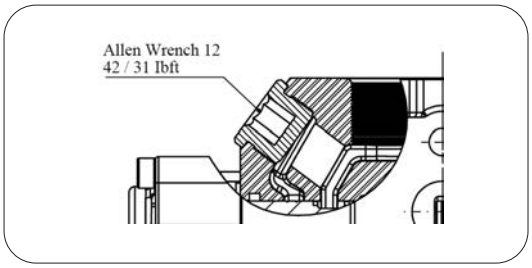

Hydraulic Diagram

DST1

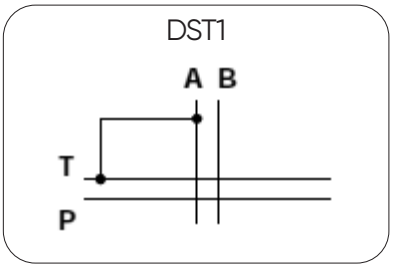

DST2

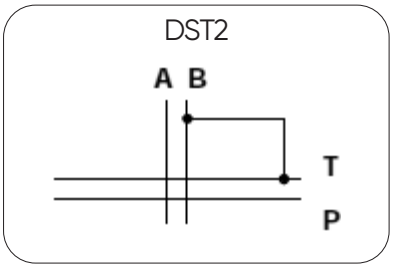

Plug

YP-1 (1:Mounted port A – 2:Mounted port B – 3:Mounted port A and B)

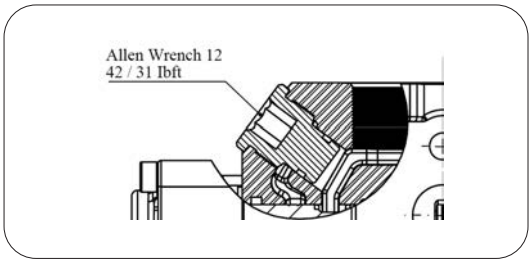

YP1

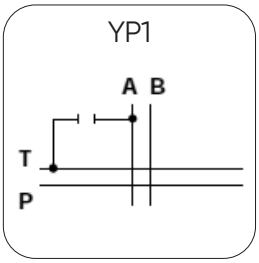

YP2

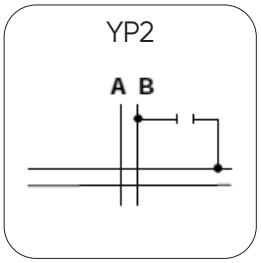

YP3

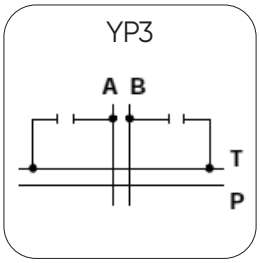

INSTALLATION AND MAINTENANCE

The ORV-PD60 valve is assembled and tested as per the technical specification of this catalog. Before the final installation on your equipment, follow the below recommendation:

• The valve can be assembled in any position, in order to prevent body deformation and spool sticking mount the product on a flat surface;

• In order to prevent the possibility of water entering the lever box and spool control kit, do not use high pressure wash down directly on the valve;

• Before painting, ensure plastic port plugs are tightly fitted.

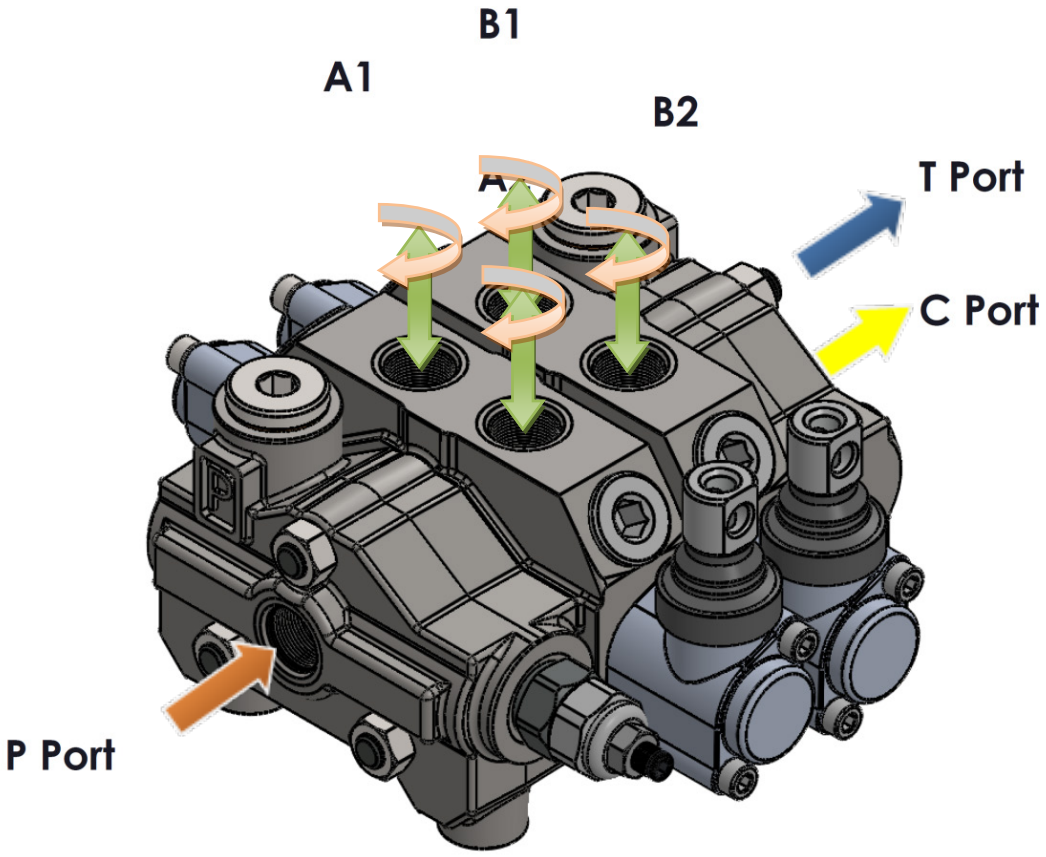

Threads Type (Nm / lbft)	P Port	A and B Port	T Port
BSP (ISO 228/1)	G 3/8	G 3/8	G 1/2
With O--Ring seal	35 / 25.8	35 / 25.8	50 / 36.9
With copper washer	40 / 29.5	40 / 29.5	60 / 44.3
With steel and rubber washer	30 / 22.1	30 / 22.1	60 / 44.3
BSP (ISO 228/1)	G 1/2	G 1/2	G 1/2
With O--Ring seal	50 / 36.9	50 / 36.9	50 / 36.9
With copper washer	60 / 44.3	60 / 44.3	60 / 44.3
With steel and rubber washer	60 / 44.3	60 / 44.3	60 / 44.3
UN--UNF (ISO 11926--1)	3/4--16 UNF--2B	9/16--18 UNF--2B	3/4--16 UNF--2B
With O--Ring seal	50 / 36.9	30 / 22.1	50 / 36.9
METRIC (ISO 262)	M18 x 1.5	M18 x 1.5	M18 x 1.5
With O--Ring seal	35 / 25.8	35 / 25.8	35 / 25.8
With copper washer	40 / 29.5	40 / 29.5	40 / 29.5
With steel and rubber washer	40 / 29.5	40 / 29.5	40 / 29.5

TECHNICAL DATA

Ports Dimensional Data

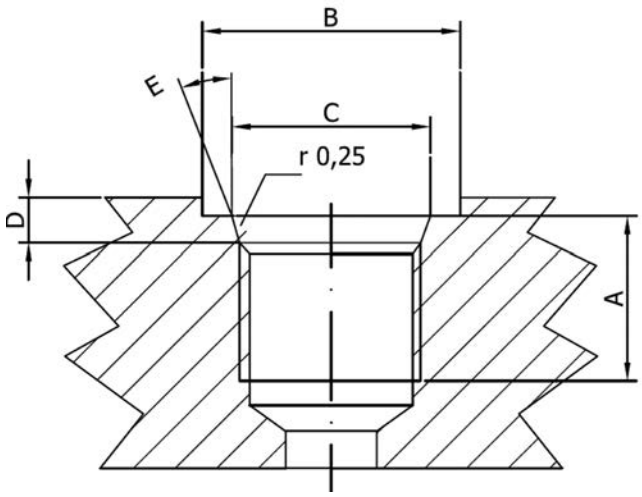

SAE UN-UNF (ISO 725)						
Dimensions		7/8-14 UNF SAE10		1"1/16-12 UN SAE12		1"5/16-12 UN SAE16	
mm	in						
A		17	0,67	20	0,79	20	0,79
B		34	1,34	41	1,61	49	1,92
C		23,9	0,94	29,2	1,15	35,5	1,40
D		2,5	0,10	3,3	0,13	3,3	0,13
E		15°		15°		15°	

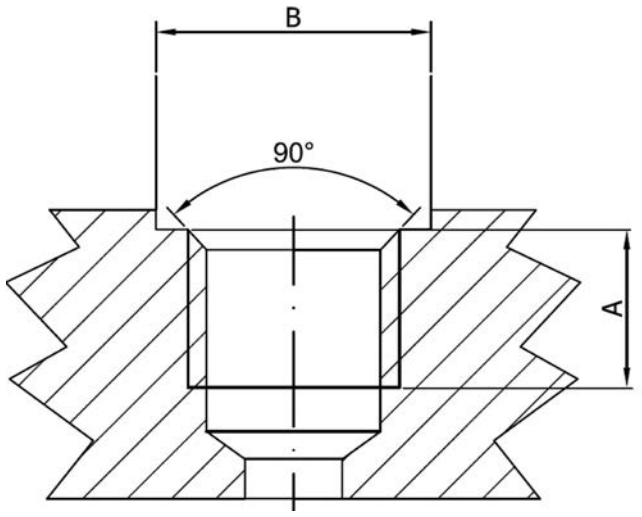

BSP (ISO 228)						
Dimensions		G 1/2"		G3/4		G1	
mm	in						
A		16	0,63	18	0,71	20	0,79
B		27	1,06	33	1,30	40	1,57

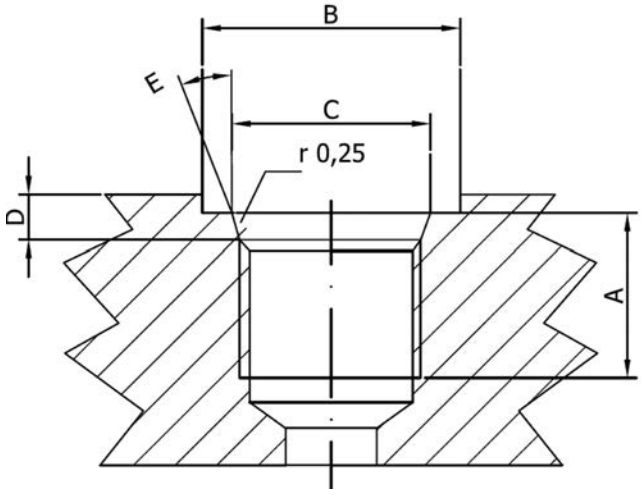

METRIC (ISO 262)					
Dimensions		M18x1,5 ISO 262		M27x2 ISO 262	
mm	in				
A		16	0,63	18	0,71
B		31,5	1,24	37,7	1,48

ORVAL HYDRAULIC

SECTIONAL
VALVES

ORV-PD80



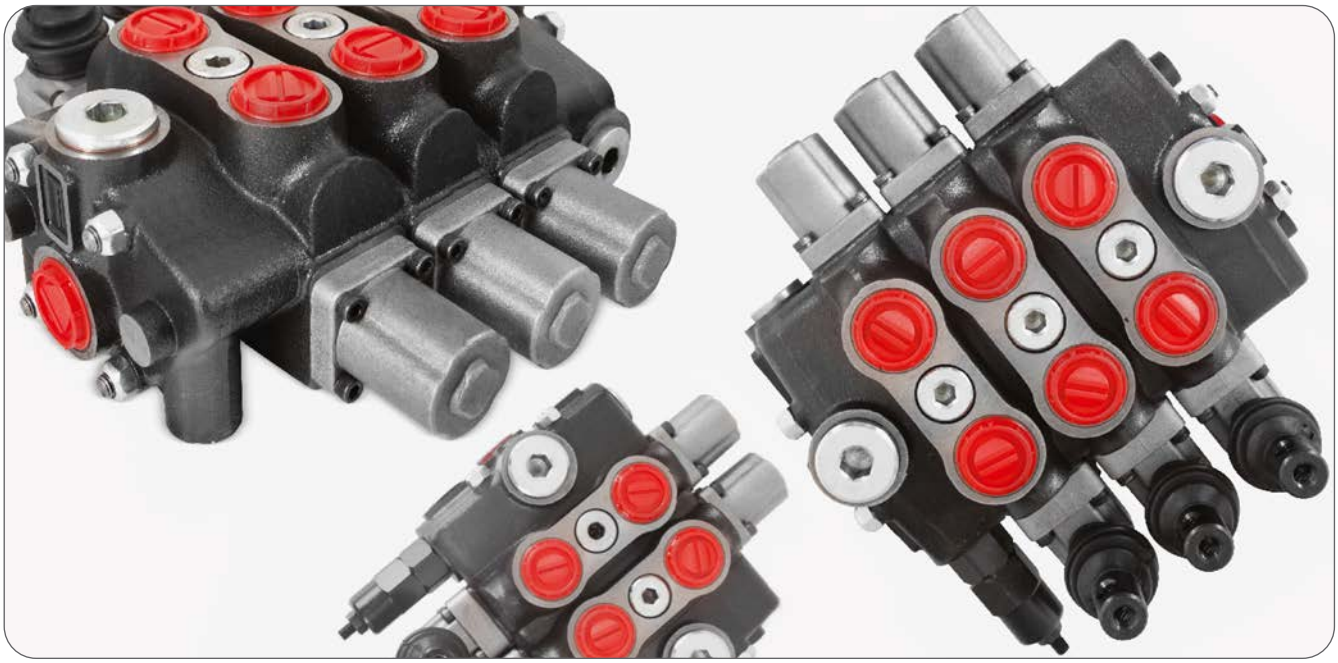

CONTENTS

Working Conditions	3
Dimensional Data	3
Hydraulic Circuit	3
Performance Data And Curve	3
Inlet Relief Options	3
Ordering Codes	3
Inlet Cover- Pump Side	3
Spool Options	3
Spool Positioners – Side of Return	3
Working Section Kit	3
Spool Positioners – Side of Lever Control	3
Spool Positioners – Side of Lever Control	3
Spool Positioners – Side of Lever Control	3
Spool Positioners – Side of Lever Control	3
Outlet Cover- Tank Side	3
Port Valves Options	3
Installation and Maintenance	3
Technical Data	3

Additional Informations

Note: This catalog shows the product in the most standard configurations. For Other Configurations, more detailed information or special request, Please contact Customer Service Dpt.

Warning!: All specifications of this catalog refer to the standard product at this date (01/2020). ORVAL, oriented to a continuous improvement, reserves the right to discontinue, modify or revise the specifications, without notice.

ORVAL IS NOT RESPONSIBLE FOR ANY DAMAGE CAUSED BY AN INCORRECT USE OF THE PRODUCT.

WORKING CONDITIONS

Nominal Flow Rating / Displacement	80 l/min	21 U.S.G.P.M
Maximum Working Pressure (Series Circuit)	210 Bar	3050 PSI
Maximum Working Pressure (Parallel Circuit)	315 Bar	4600 PSI
Max. Back Pressure	25 Bar	360 PSI
Oil Temperature with NBR Seals	-20 to 80 C°	-4 to 176 F °
with FPM (Viton) Seals	-20 to 100 C°	-4 to 212 F °
Oil Viscosity – Operating Range	From 10 to 75 mm2/s	From 10 to 75 cSt
Minumum / Maximum	10 / 400 mm2/s	10 / 400 cSt
Oil Filtration	≤30 µ	
Ambiant Temperature Range	-35 to 60 C°	-31 to 140 F °
Number Of Spools	1 to 12	
Internal Leakage (at 100 bar (1450 PSI), 40C° (110 F°), 46 cSt – A(B)–T)	3 cm3/min	0,18 in3/min
Max. Level Of Contamination	19/16 - ISO 4406	
Tie rod tightening torque	30 Nm	22 lbft

Not: This catalogue shows technical specifications measured with mineral oil of 46 mm2/s-46 cSt viscosity at 40 C° temparture.

Features

• Simple, compact and heavy duty designed sectional valves from 1 to 12 sections for open and closed center hydraulic systems.
• Optionaly Carry-Over port only tandem circuit.
• Fitted with a main pressure relief valve.
• Interchangeable spool diametre is 18 mm – 0,71 in.
• Available manual, pneumatic, hydraulic and electro-pneumatic spool control kits.

DIMENSIONAL DATA

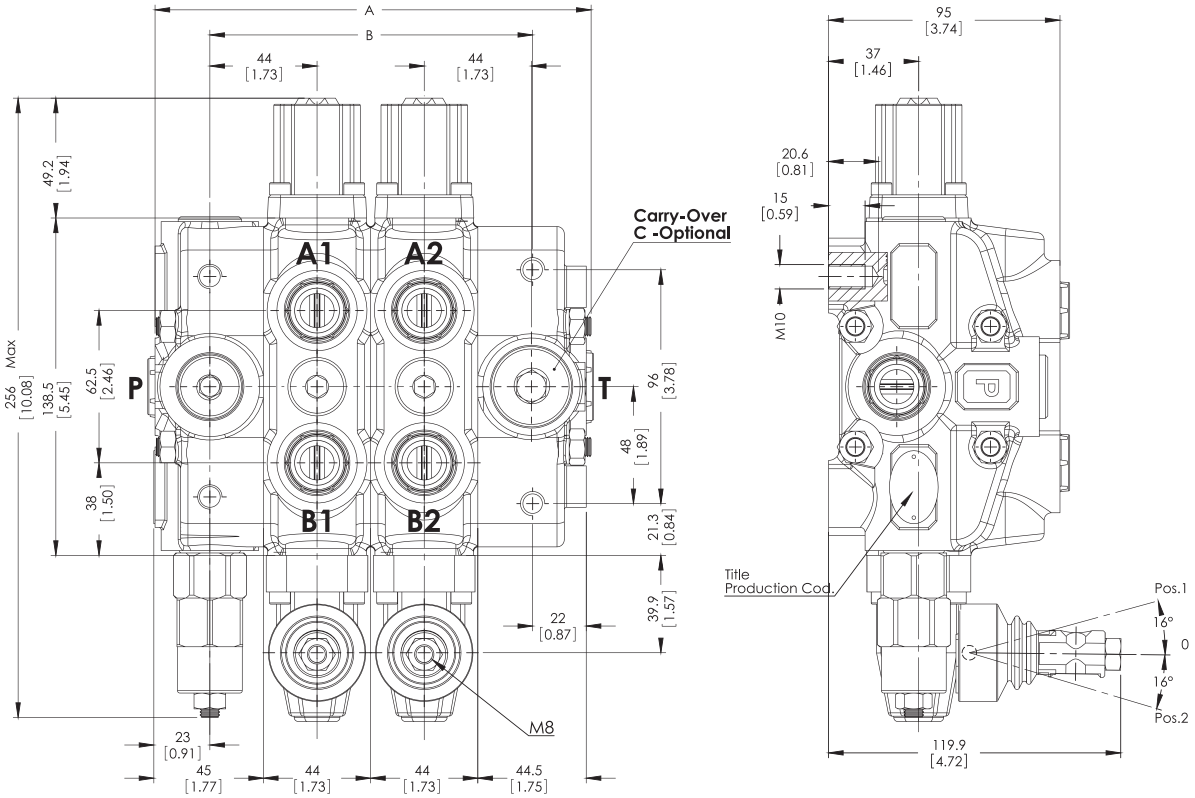

TYPE	A		B		Weight	
	mm	in	mm	in	Kg	lb
ORV- PD80-1P	133	5.23	88	3.46	7.58	16.71
ORV- PD80-2P	177	6.97	132	5.19	10.96	24.16
ORV- PD80-3P	221	8.70	176	9.93	14.34	31.61
ORV- PD80-4P	265	10.43	220	8.66	17.37	39.06
ORV- PD80-5P	309	12.16	264	10.39	21.10	46.51
ORV- PD80-6P	353	13.89	308	12.12	24.48	53.96
ORV- PD80-7P	397	16.63	352	13.85	27.86	61.41
ORV- PD80-8P	441	17.36	396	15.19	31.24	68.86
ORV- PD80-9P	485	19.09	440	17.32	34.62	76.31
ORV- PD80-10P	529	20.82	484	19.06	38.00	83.76
ORV- PD80-11P	573	22.56	528	20.79	41.38	91.21
ORV- PD80-12P	617	24.29	572	22.52	44.76	98.66

STANDARD THREADS

PORT	BSP (Iso 228) 1/2" Series	BSP (Iso 228) 3/4"Series	UN-UNF (Iso 11926-1)	Metric (Iso 262)
P Inlet	G 1/2	G 3/4	7/8-14 UNF	M27x2
A-B Ports	G 1/2	G 3/4	3/4 - 16 UNF	M22x1.5
T Outlet	G 3/4	G 3/4	7/8-14 UNF	M27x2
Pneumatic	G 1/4	G 1/4	NPTF 1/8 - 27	NPTF 1/8 - 27
Carry-Over	G 3/8	G 3/8	G 3/8	G 3/8

HYDRAULIC CIRCUIT

Parallel

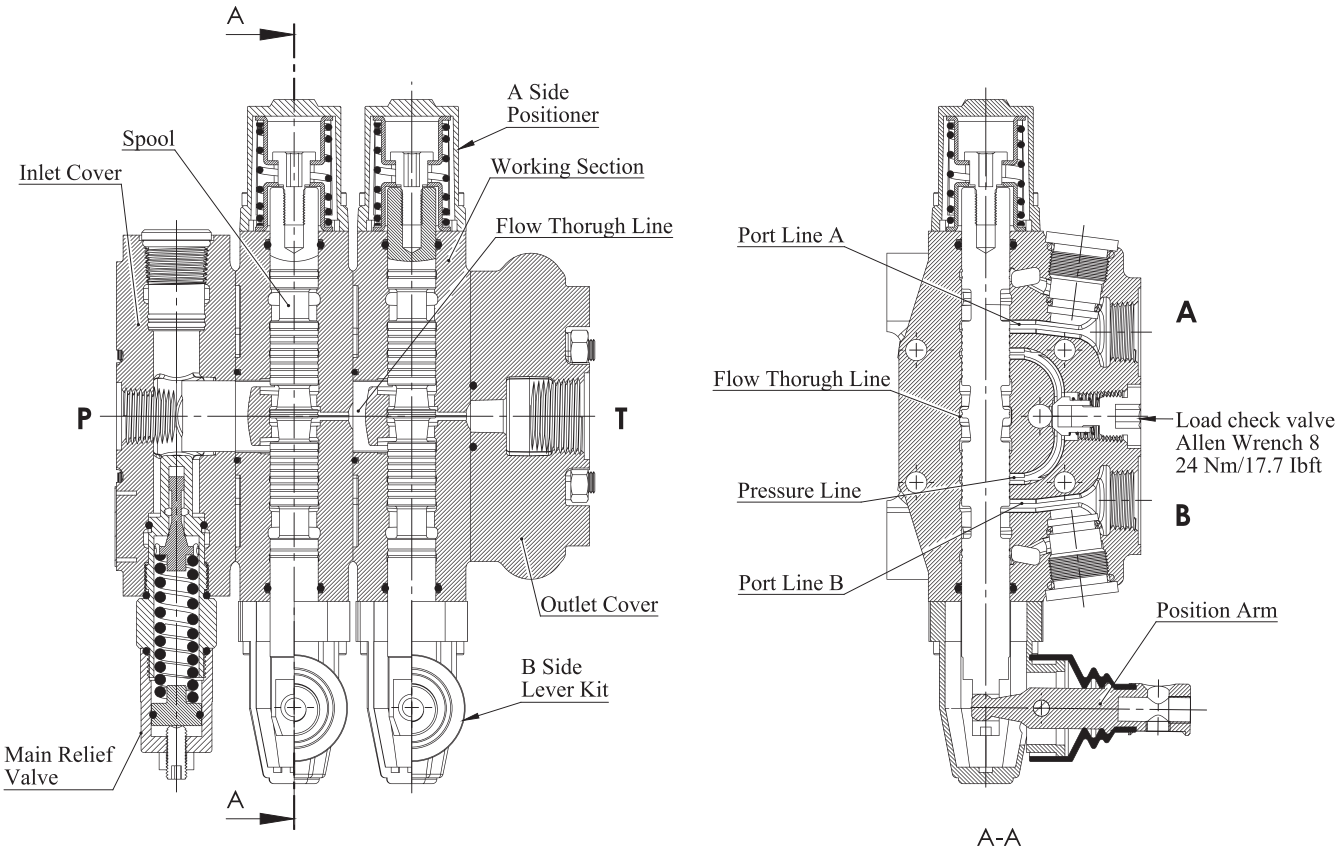

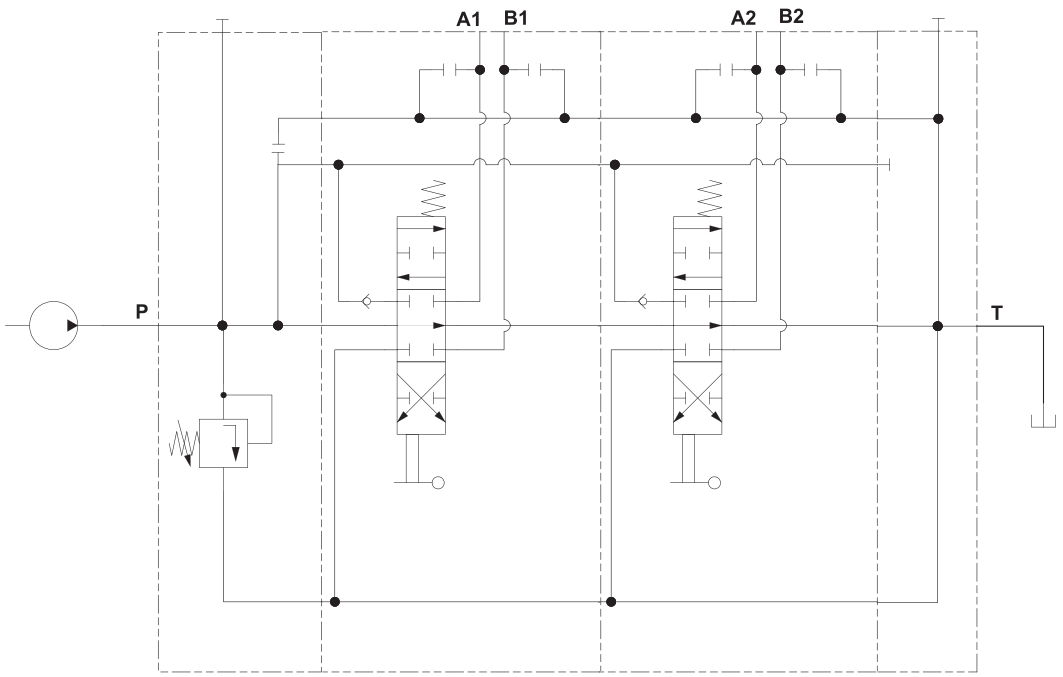

Code: ORV PD80-2P (SD(LA)-SMR2-125-PP)/P-1A-STL-SR/ P-1A-STL-SR/ SO-PT1 / SGT

HYDRAULIC CIRCUIT

Inlet Cover – Pump Side

SD - Side inlet with direct pressure relief valve
TD - Top inlet with direct pressure relief valve
SP - Side inlet with relief valve blanking plug

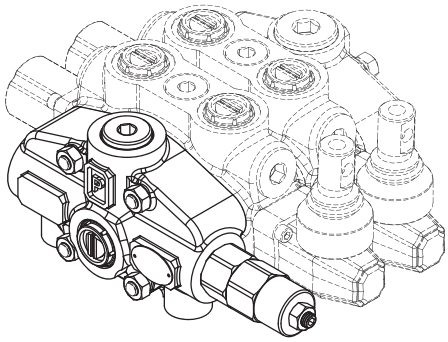

Type = SD

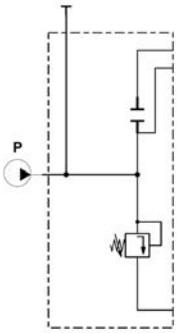

Type = TD

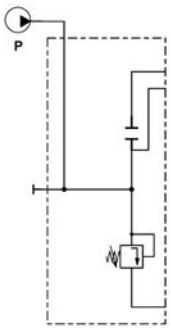

Type = SP

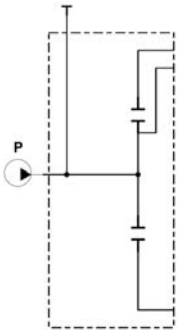

Working Sections

P – Parallel

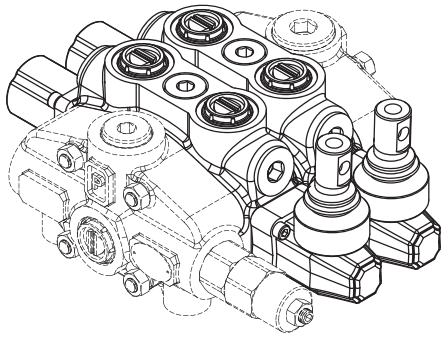

Type = P

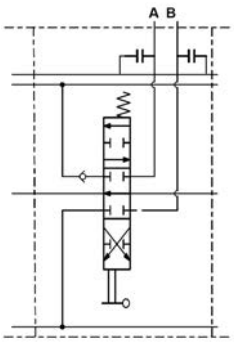

HYDRAULIC CIRCUIT

Outlet Cover (Tank Side)

SO - Side outlet
TO - Top outlet
TCO - Top outlet with carry-over
TC - Top outlet with closed centre

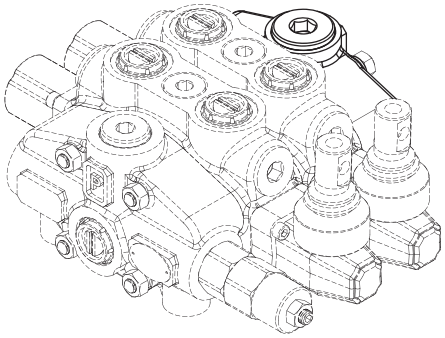

Type = SO

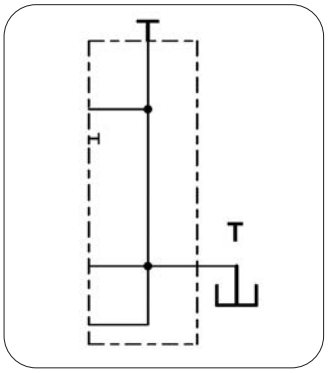

Type = TO

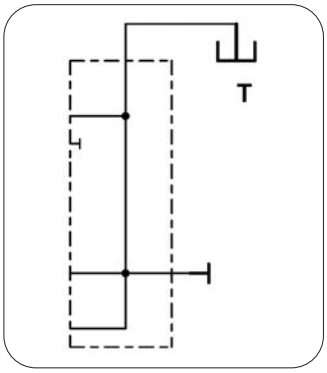

Type = TCO

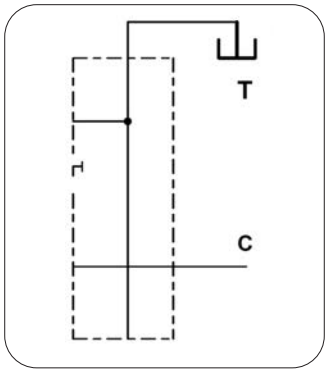

Type = TC

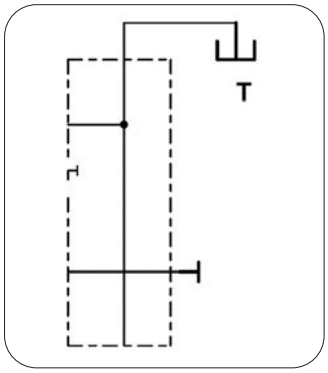

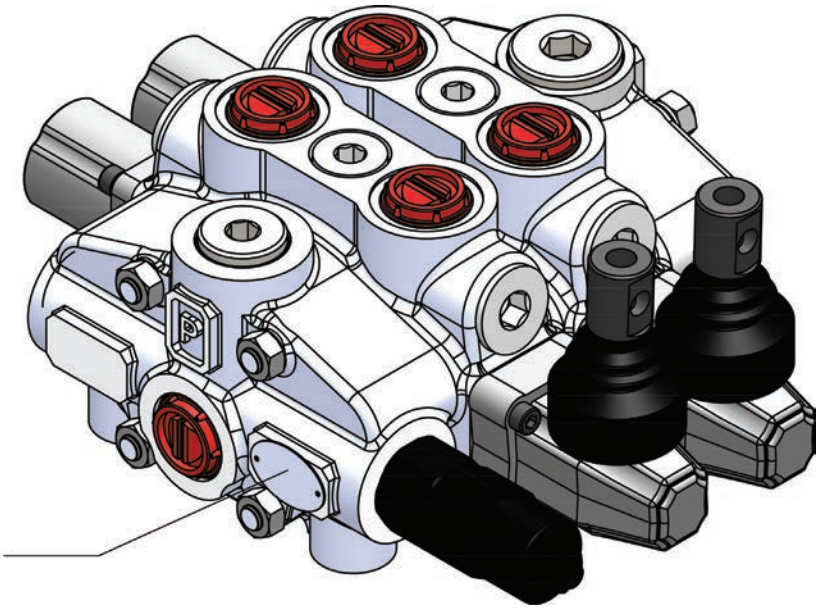

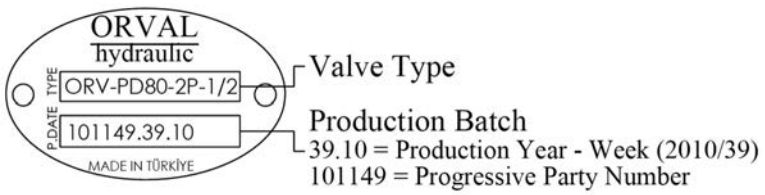

HYDRAULIC CIRCUIT

Standard Configurations With Top Inlet And Outlet Ports - RH (Right Inlet)

A symetrical body allows the reverse assembly of spool.

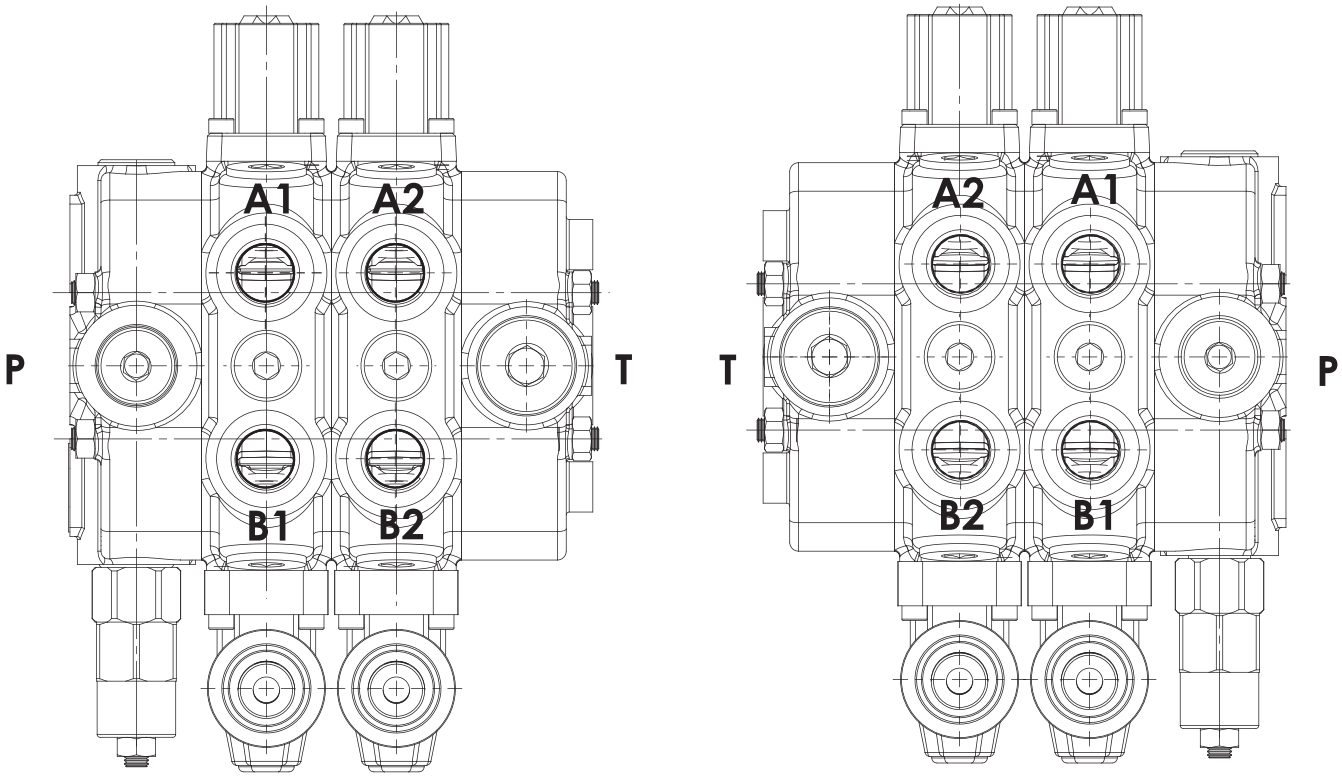

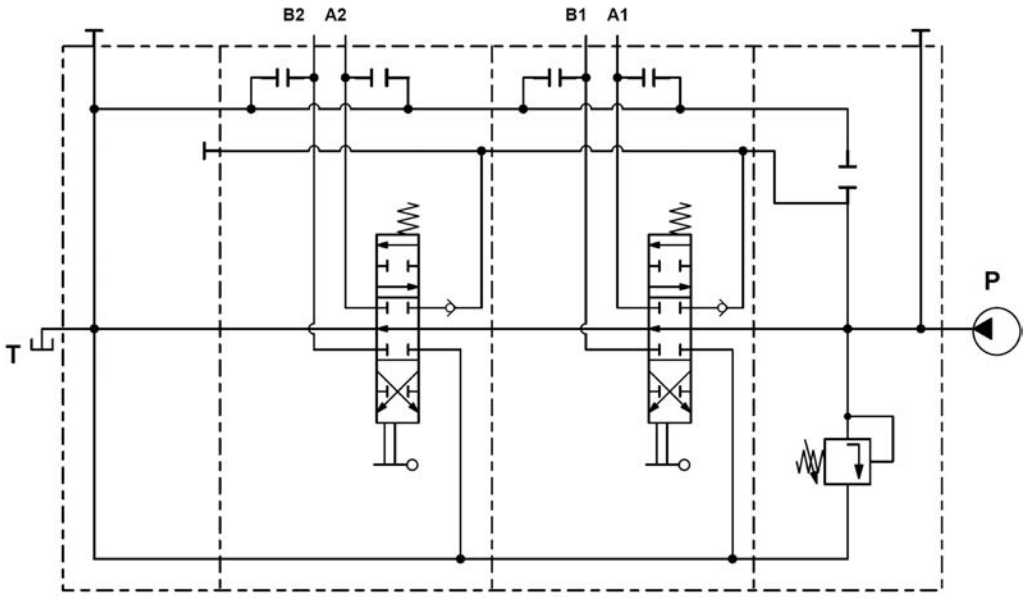

Code: ORV PD80-2P (SD(RA)-SMR2-125-PP)/P-1A-STL-SR/ P-1A-STL-SR/ SO-PT1 / SGT

PERFORMANCE DATA AND CURVE

Open Center - Pressure Drop (P-T)

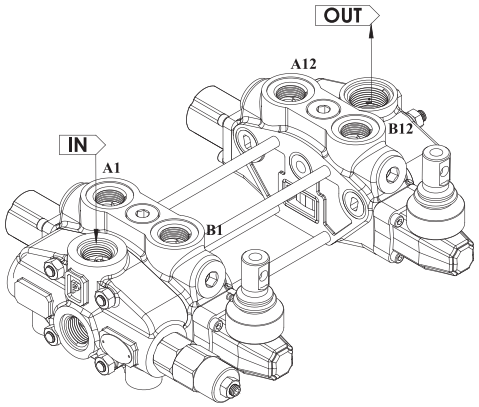

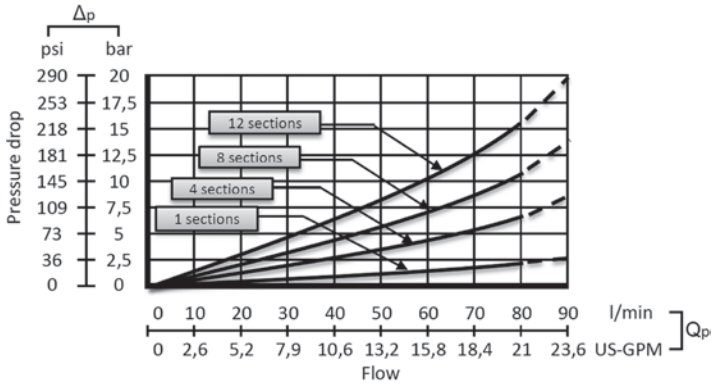

Inlet to Work Port - Pressure Drop (P-A/B)

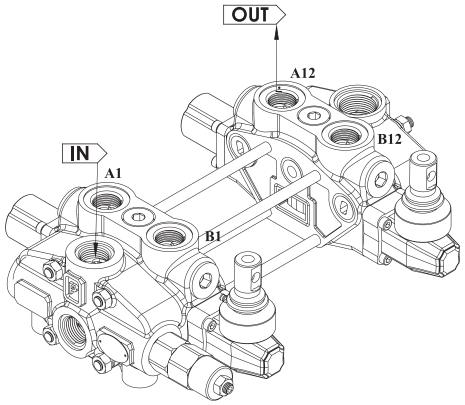

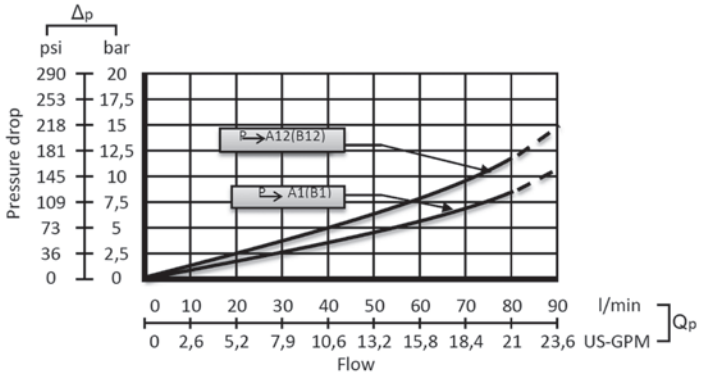

Work Port to Outlet - Pressure Drop (A/B-T)

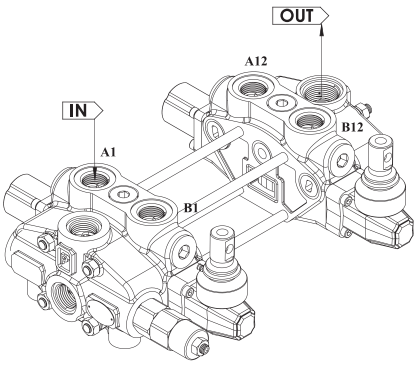

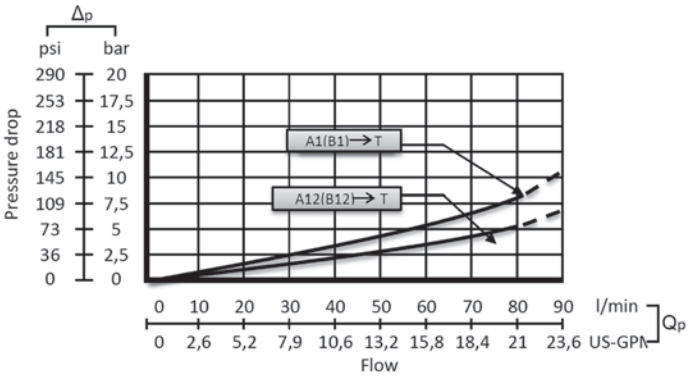

INLET RELIEF OPTIONS

Direct Pressure Relief Valve

Code:

SMR2 – 125

- Pressure Setting Bar in (Standard 125 bar)
- Standard Main Relief Spring Type -2

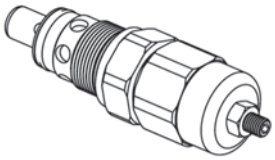

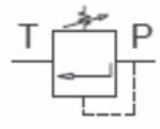

Performance Data

Spring Type Number: 1
Setting= 80 Bar -Range=63-125 Bar

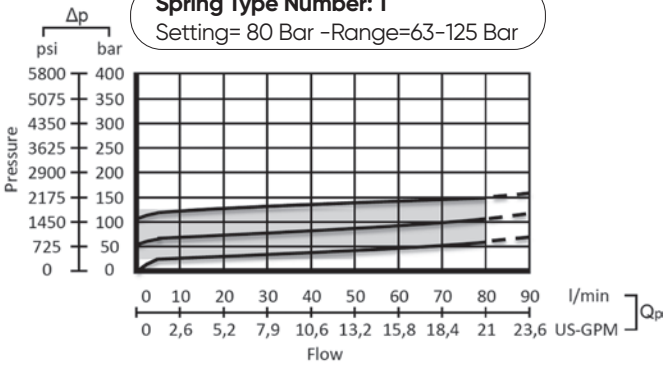

Spring Type Number: 2
Setting= 125 Bar -Range=100-165 Bar

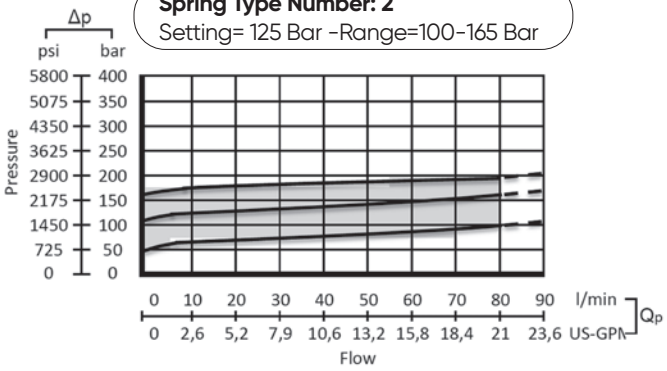

Spring Type Number: 3
Setting= 175 Bar -Range=125-250 Bar

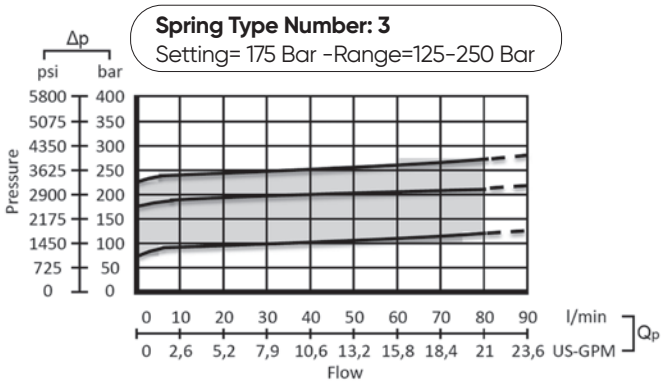

Spring Type Number: 4
Setting= 220 Bar -Range=200-315 Bar

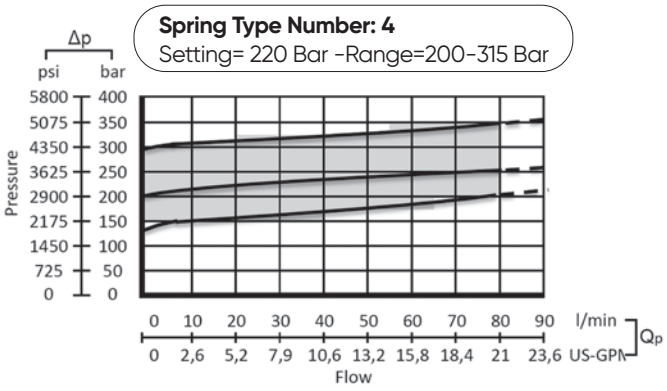

Adjustment Type on Valve

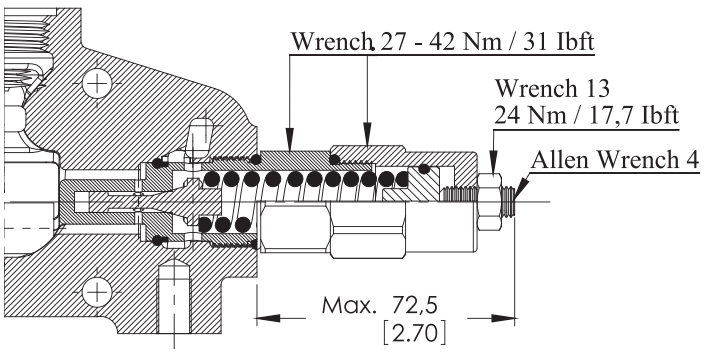

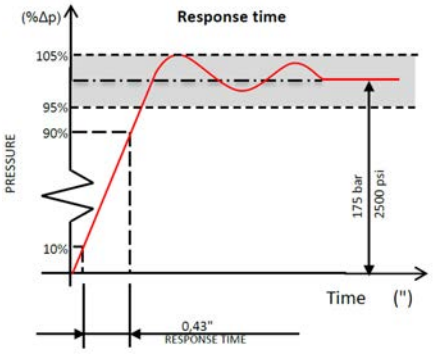

INLET RELIEF OPTIONS

Direct Pressure Relief Valve

Kit No: **PAC**

Sectional Appearance

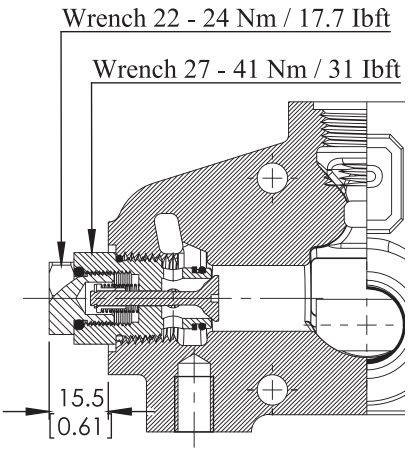

Diagram

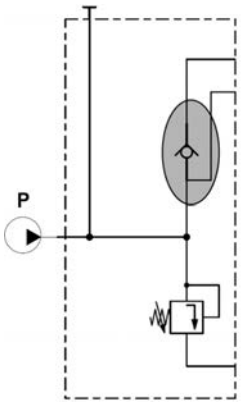

Performance Data

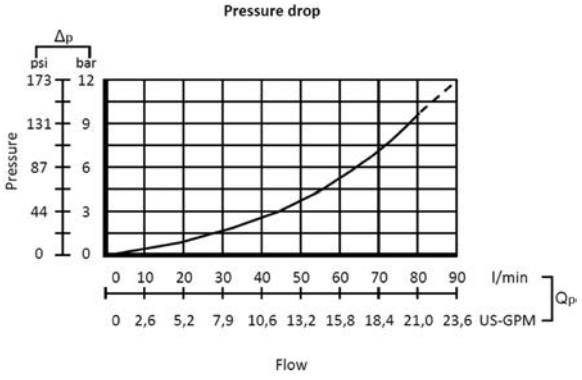

Relief Blanking Plug - SP

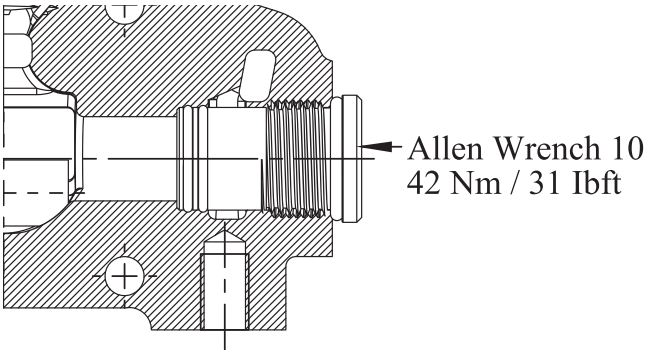

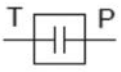

ORDERING CODES

Order Example

2.2 2.4 3.2

ORV PD80-2P (SD-SMR2-125-PP)/P-1A- STL- YAC-SR / P-1A-STL-80P / SO-PT1-CO / SGT

1 1.2 1.4 2.1 2.3 2.6 3.1 3.3

Base Code "0" — 1 st Section — Following Section — Output Section

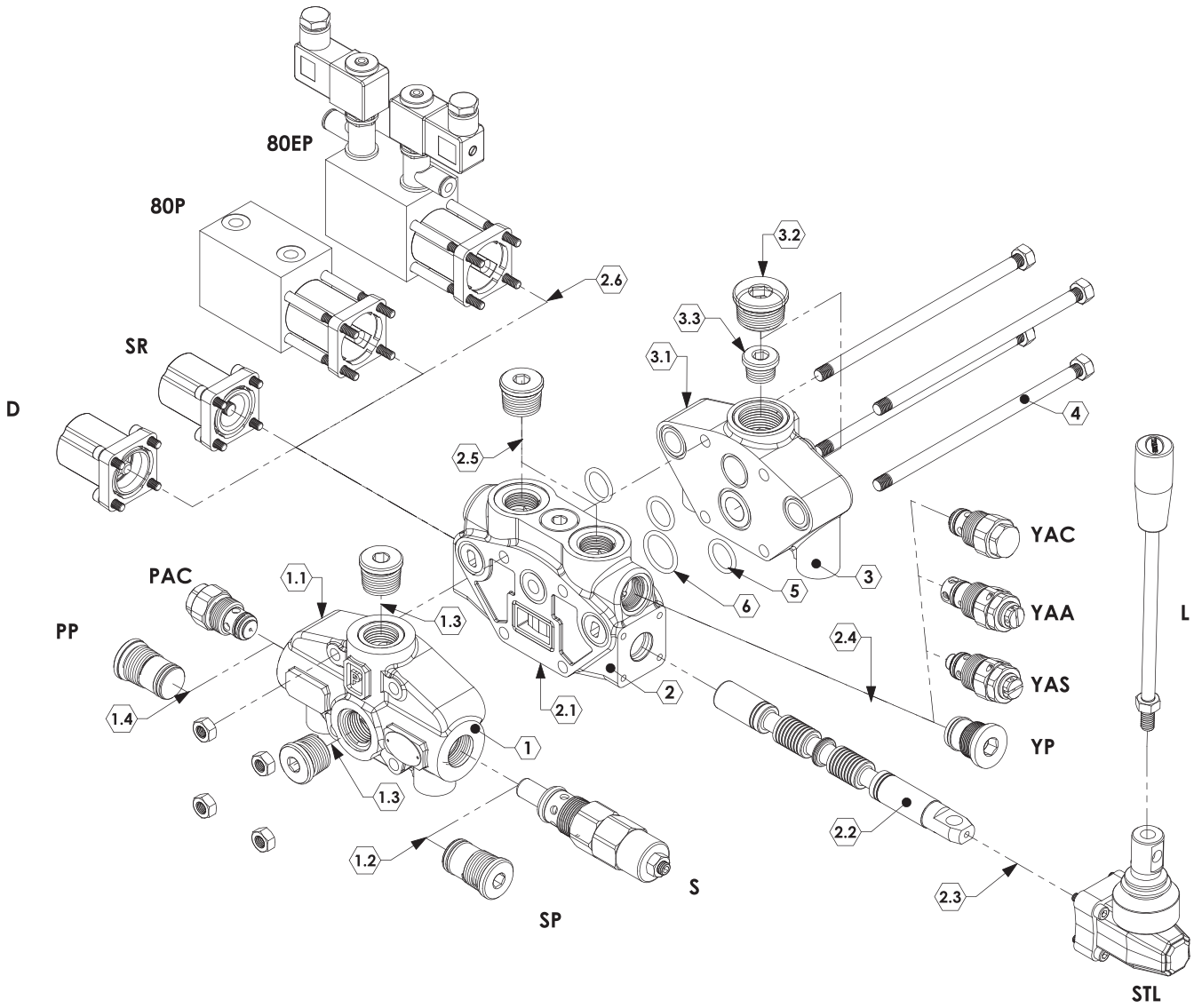

ORDERING CODES

1- Inlet Section

ORV PD80-2P PD80 = Valve Type-(PD)- Sectional
(80) - Max. Flow Rate
2P =Sections Quantity
SD = Side inlet with direct pressure relief valve (1SD80100)
TD = Top inlet with direct pressure relief valve (1TD80100)
SP = Side inlet with relief valve blanking plug (1SP80100)

2- Working Section

P = Parallel (2P80100)

3- Output Section

SO = Side outlet (3SO80100)
TO = Top outlet (3TO80100)
TCO = Top outlet with carry-over (3TCO80100)
TC = Top outlet with closed centre (3TC80100)

4- Assembling Kit

Tie rod kit for 1 section valve - (4TRK180100)
Tie rod kit for 2 section valve - (4TRK280100)
Tie rod kit for 3 section valve - (4TRK380100)
Tie rod kit for 4 section valve - (4TRK480100)
Tie rod kit for 5 section valve - (4TRK580100)
Tie rod kit for 6 section valve - (4TRK680100)
Tie rod kit for 7 section valve - (4TRK780100)
Tie rod kit for 8 section valve - (4TRK880100)
Tie rod kit for 9 section valve - (4TRK980100)
Tie rod kit for 10 section valve - (4TRK1080100)
Tie rod kit for 11 section valve - (4TRK1180100)
Tie rod kit for 12 section valve - (4TRK1280100)

5-6- O_Ring Kit

5. -17.00x2.65 NBR 70 SH O-Ring seal (3 Qty.) (5MK80100)
6. -22.40x2.65 NBR 70 SH O-Ring seal (1 Qty.) (6MK80100)

1.*-Inlet Options

1.1 Inlet Cover
Body = Standard (11BS80100)
1.2 Inlet Relief
SMR1-080 – (12SMR180080)–Range 63-125 bar
Setting 80 bar
SMR2-125 – (12SMR280125)– Range 100-160 bar
Setting 125 bar
SMR3-175 – (12SMR380175)– Range 125-250 bar
Setting 175 bar
SMR4-220 – (12SMR480220)–Range 200-315 bar
Setting 220 bar
1.3 Ports Plug
PA1 =G3/4 Top and side input - (13PA080100)
PA2= G1 Top and side input –(13PA280100)
1.4 Inlet Valve
PAC =Inlet anti-cavitation valve –(14PAC80100)
PP(SP) = Relief valve blanking plug –(14PSP80100)

2.*- Working Options

2.1 Working Section
PA = Without ports valve prearrangement, with parallel circuit - Body (21BSPA80100)
2.2 Spool Options
1A -(22SS80110) – 3 Positions ,Double acting
2A -(22SS80120) – 3 Positions ,Double acting
A to tank B Blocked
3A -(22SS80130) – 3 Positions ,Double acting
B to tank A blocked
4A -(22SS80140) – 3 Positions ,Double acting
A and B tank
5A -(22SS80150) – 3 Positions ,Single acting on
A (A to tank)
6A -(22SS80160) – 3 Positions ,Single acting on
B (B to tank)
2.3 Lever Options
L = Standard HandLever (L=120mmxM8) - (7L040100)
JL =Joystick lever for two sections operation (5JL 080100)
STL = Standard Lever –(23STL80100)
HL = Remote Cable Kit – (80HL80100)
2.4 Port Relief Valves
Anti-Shock Valve
YAS (T1-50) – (24YAC80050)–Range 35-70 bar
Setting 50 bar
YAS (T1-100) – (24YAC80100)–Range 63-220 bar
Setting 100 bar
YAS (T1-200) – (24YAC80200)–Range 180-350 bar
Setting 200 bar
Anti-Shock and Anti-Cavitation Valve
YAA (T1-63) – (24YAA80063)–Range 35-70 bar
Setting 50 bar
YAA (T1-100) – (24YAA80063)–Range 63-220 bar
Setting 100 bar
YAA (T1-200) – (24YAA80063)–Range 180-350 bar
Setting 200 bar
YAC - Anti Cavitation– (24YAS80100)
YP- A and B ports valve blanking plug (24YP80100)
DST-A and B ports valve blanking plugs with
connection to tank–(24DST80100)
2.5 Ports Plug Options
PL1 =Plug for single action spool for 2A-3A, G3/4
(25PL180100)
PL2 =Plug for single action spool for 2A-3A, G1
(25PL280100)
2.6 Spool Positioners
SR=Spring Return in neutral position – (26SR80100)
D =Detent in position 1, neutral and 2 -(26D80100)
80P=ON/OFF Pneumatic – (2645P150100)
80EP=12 VDC ON/OFF electro-pneumatic
(2680EP150112)
80EH= 12 VDC/24 VDC ON/OFF electro-hydraulic
(3680EH100112)

3.*- Working Options

3.1 Working Section
Body = Standard (31BS80100)
3.2 Output Plug
PT1 =G1 Top and Side output (32PT180100)
3.3 Circuits Options
CO =G1/8 Carry–Over Connector (33CO80100)

INLET COVER- PUMP SIDE

LH Inlet Valve Options

Type No: **SD**

Sectional Appearance

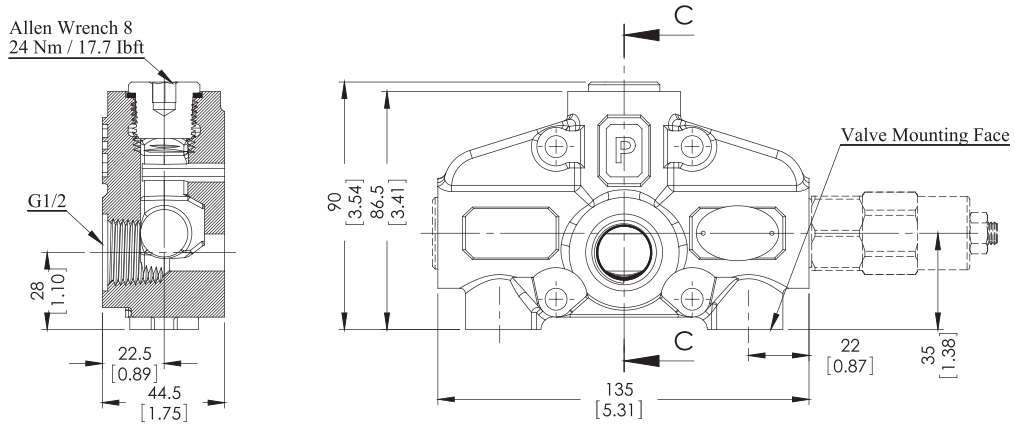

Type No: **TD**

Sectional Appearance

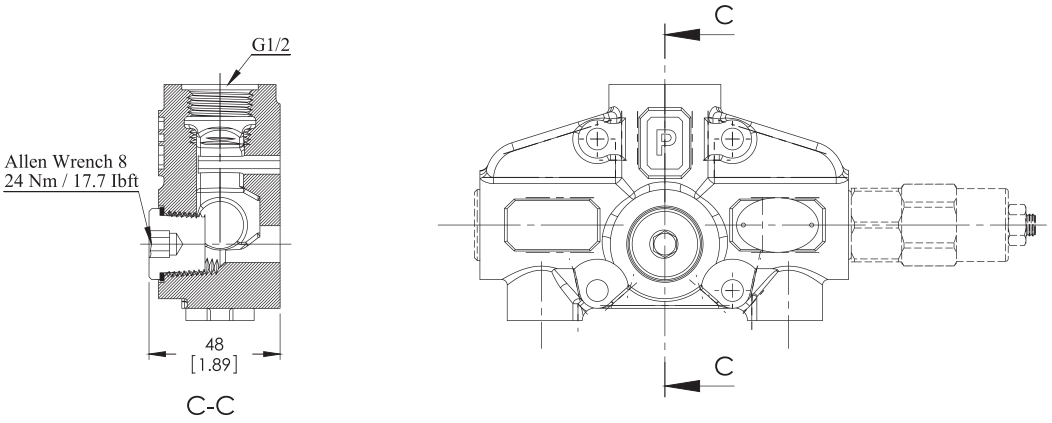

Hydraulic Diagram

Type No: **SD**

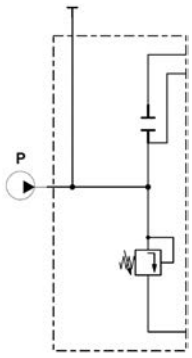

Type No: **TD**

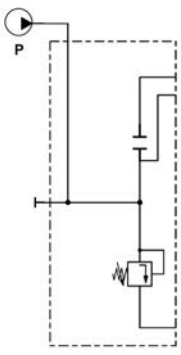

INLET COVER- PUMP SIDE

RH Inlet Valve Options

Type No: **RA**

Sectional Appearance

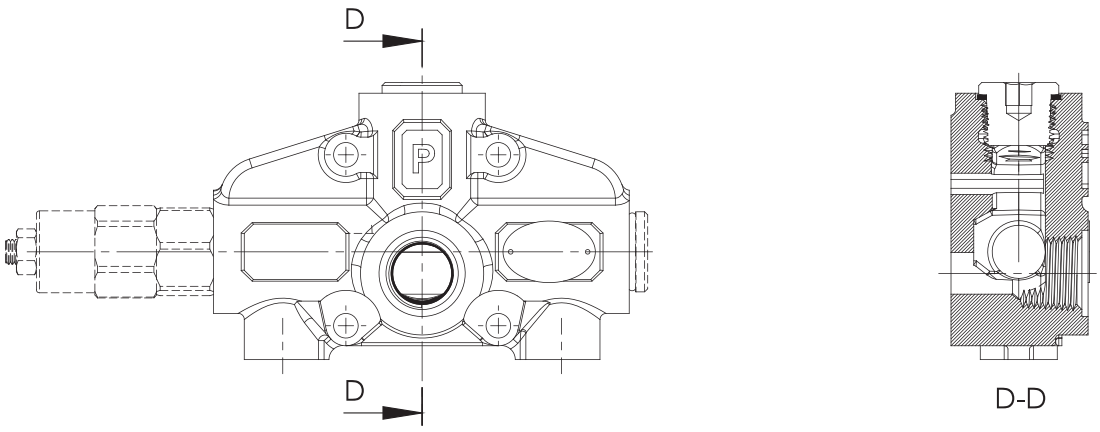

Type No: **RB**

Sectional Appearance

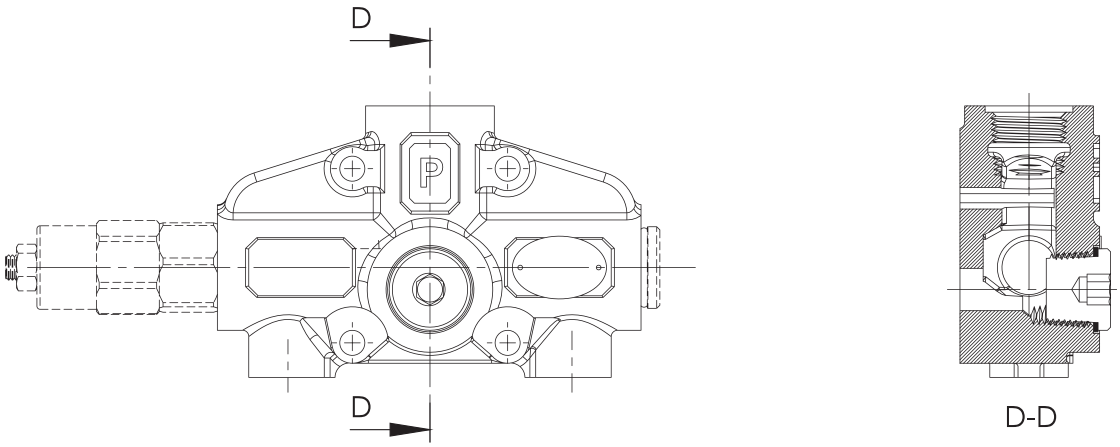

Hydraulic Diagram

Type No: **RA**

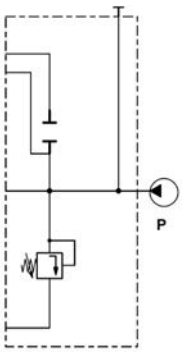

Type No: **RB**

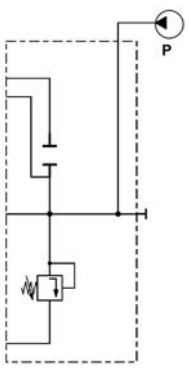

SPOOL OPTIONS

Spool Type - 1A

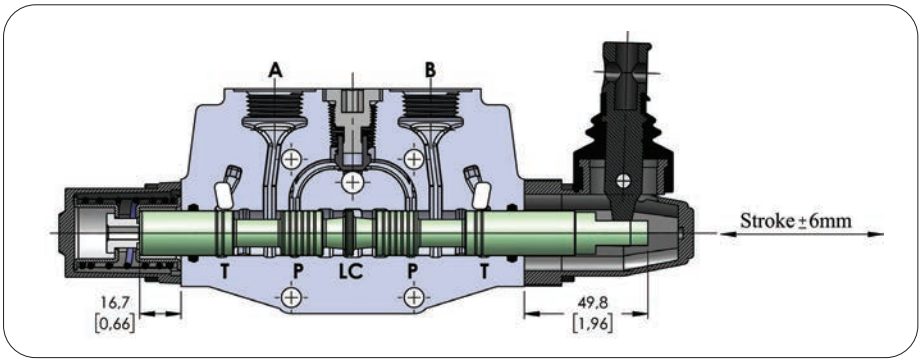

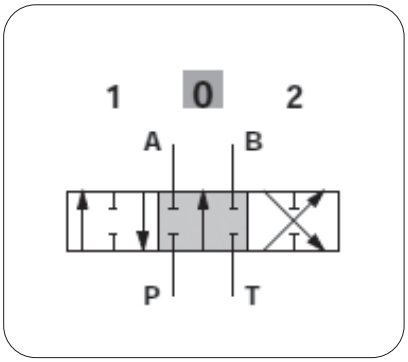

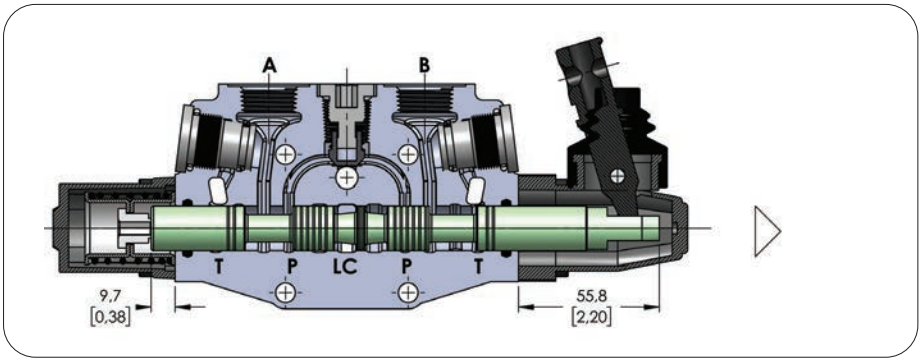

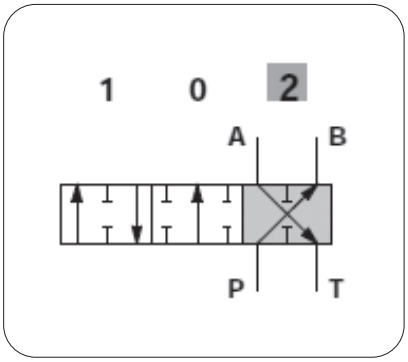

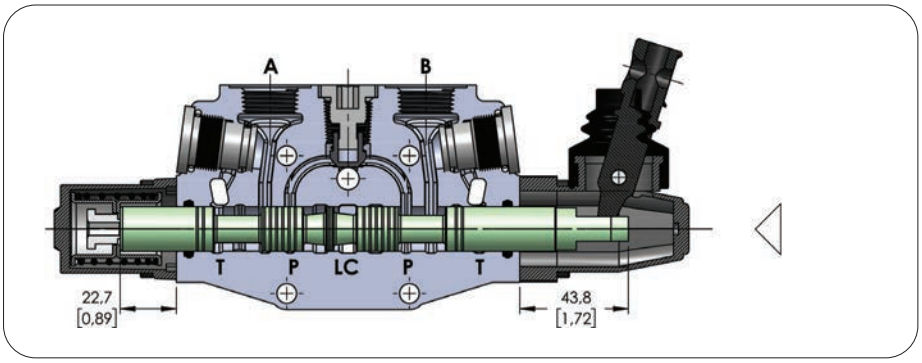

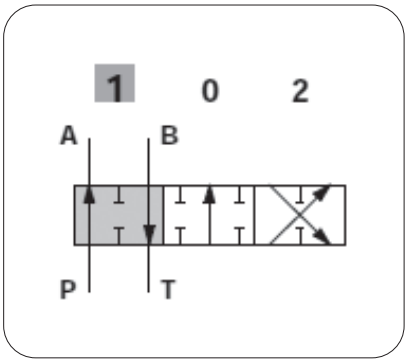

Performance Curve And Data

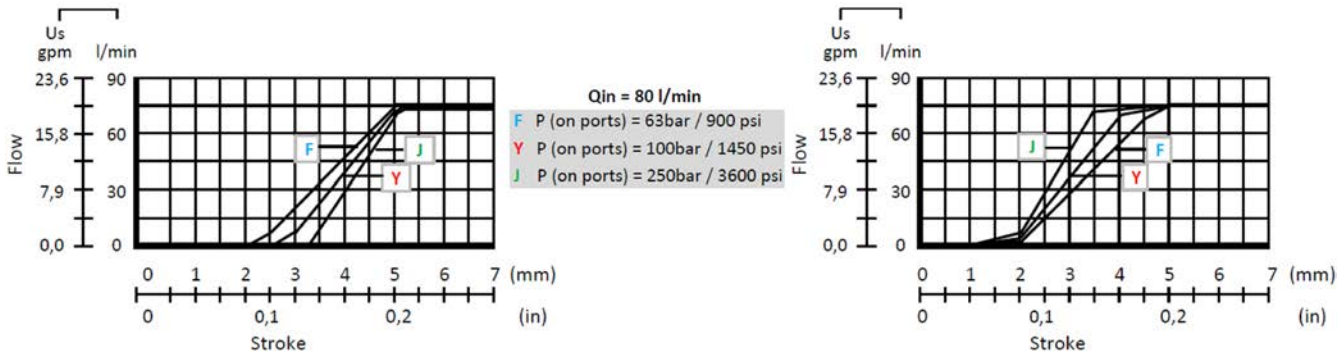

SPOOL OPTIONS

Spool Type - 2A

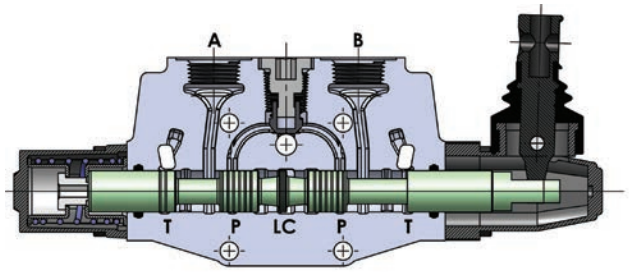

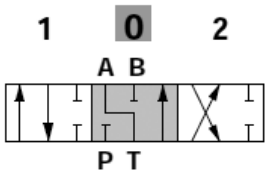

Spool Type - 3A

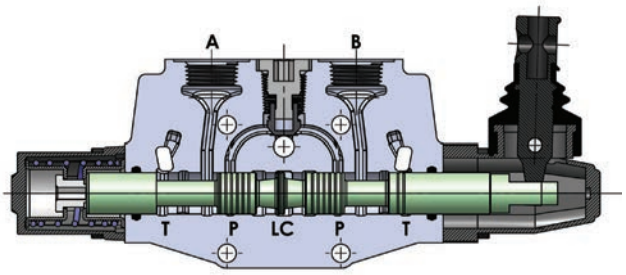

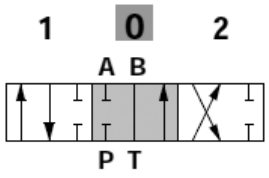

Spool Type - 4A

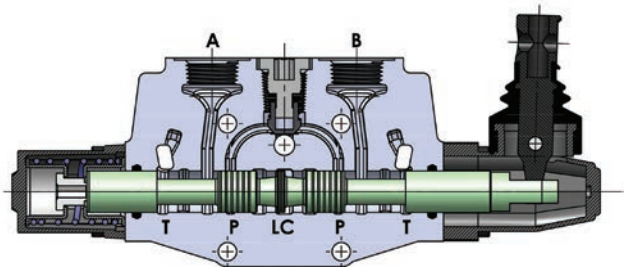

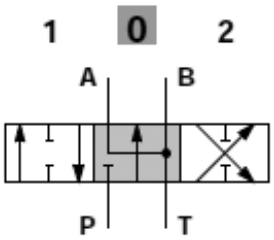

Spool Type - 5A

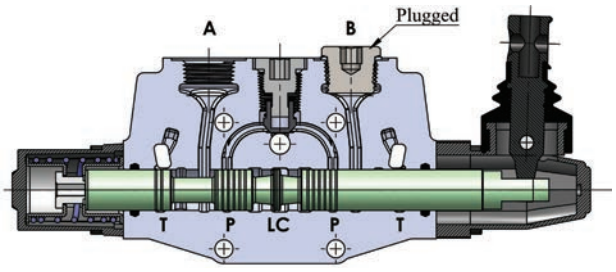

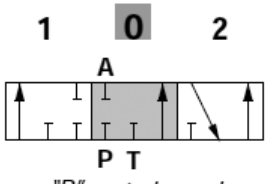

"B" port plugged

Spool Type - 6A

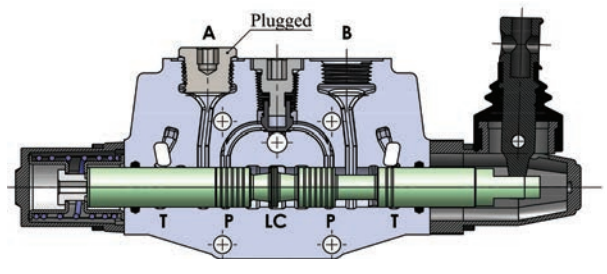

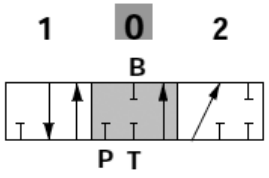

"A" port plugged

SPOOL POSITIONERS – SIDE OF RETURN

With Spring Return in Neutral Position

Kit No: **SR**

Sectional Appearance

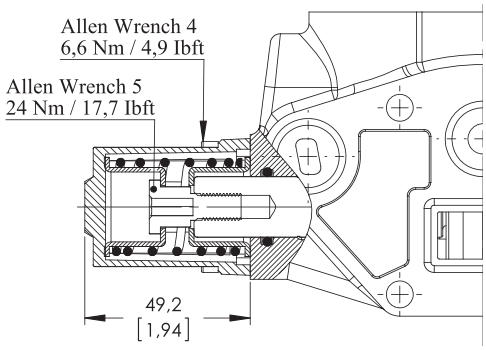

Diagram



With Detent

Kit No: **D**

Sectional Appearance

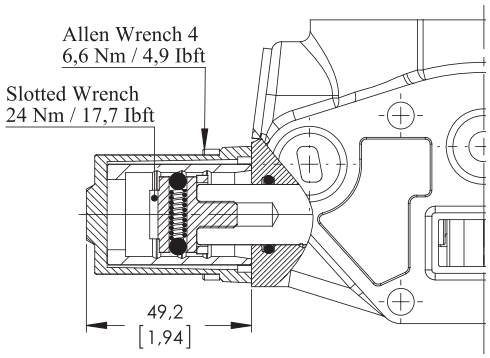

Diagram

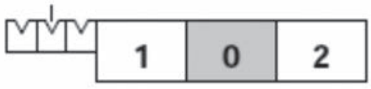

Force - stroke diagram

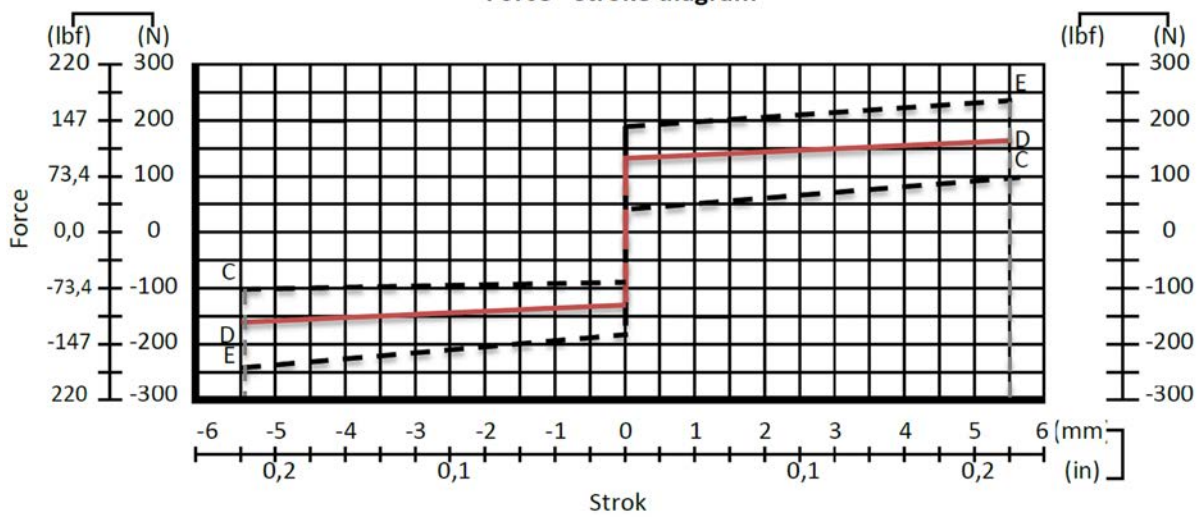

SPOOL POSITIONERS – SIDE OF RETURN

ON/OFF Pneumatic Control

Kit No: **80P**

Sectional Appearance

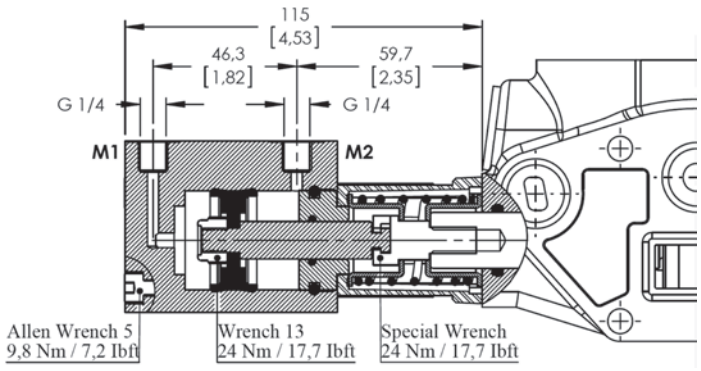

Diagram

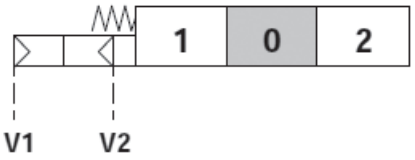

Operating Features
Pilot Pressure .....: 6 Bar (Max. 10) / 87 Psi (Max. 145)

ON/OFF Electro-Pneumatic Control

Kit No: **80EP**

Sectional Appearance

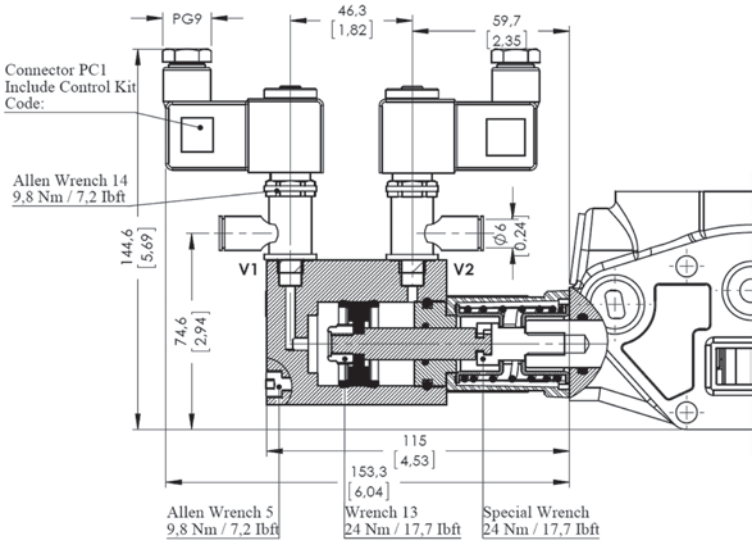

Diagram

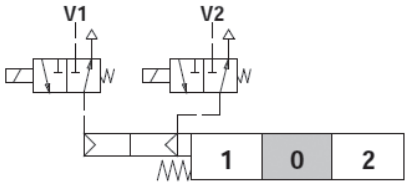

Operating Features
Pilot Pressure .....: 6 Bar (Max. 10) / 87 Psi (Max. 145)
Selenoid Operating Features
Nominal Voltage.....: 12VDC / 24 VDC
Power Rating.....: 6 W

SPOOL POSITIONERS – SIDE OF RETURN

ON/OFF Electro - Hydraulic Control

Kit No: **80EH**

Sectional Appearance

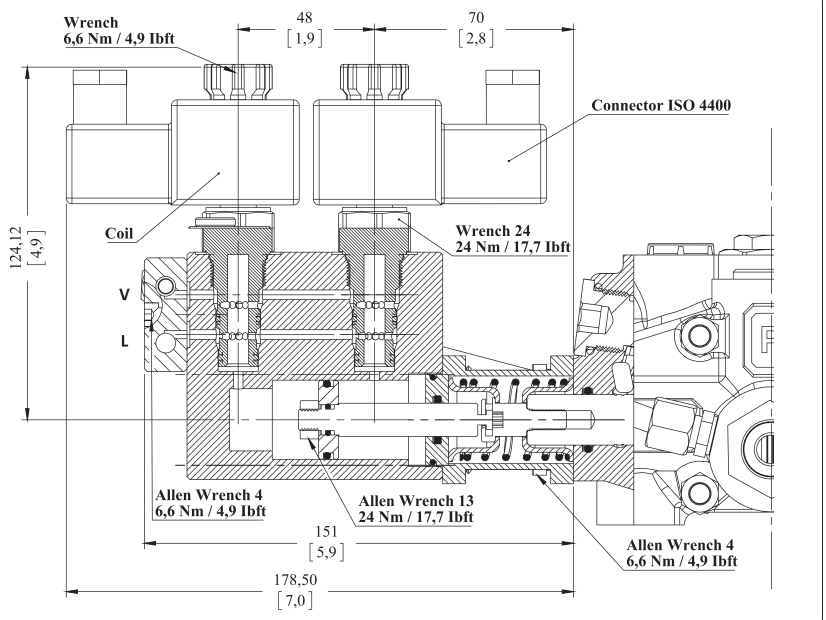

Diagram

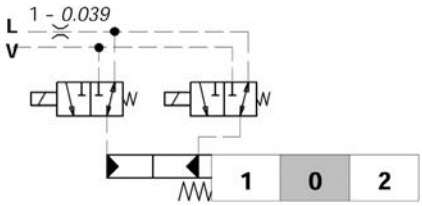

Operating Features

Pilot Pressure .....: 10 Bar / 145 Psi
: 50 Bar / 725 Psi
Max back pressure on drain L....:25 Bar / 360 Psi

Selenoid Operating Features

Coil Connection.....: ISO 4400
Nominal voltage.....: 12 VDC / 24 VDC
Power rating.....: 21 W
Duty cycle.....: %100
Protection type.....: IP 65
Nominal voltage tolerance.....: ±10
Max temperatures.....: 100 C°
Stroke.....: ±5,5 mm

ORDER CODE

External Pilot Collector
COL 11 - 10COL1001 – Kit For Section 1
COL 12 - 10COL1001 – Kit For Section 2
COL 13 - 10COL1001 – Kit For Section 3
COL 14 - 10COL1001 – Kit For Section 4
COL 15 - 10COL1001 – Kit For Section 5
COL 16 - 10COL1001 – Kit For Section 6
COL 17 - 10COL1001 – Kit For Section 7
COL 18 - 10COL1001 – Kit For Section 8

Standard Pilot Collector
COL 21 - 10COL2001 – Kit For Section 1
COL 22 - 10COL2001 – Kit For Section 2
COL 23 - 10COL2001 – Kit For Section 3
COL 24 - 10COL2001 – Kit For Section 4
COL 25 - 10COL2001 – Kit For Section 5
COL 26 - 10COL2001 – Kit For Section 6
COL 27 - 10COL2001 – Kit For Section 7
COL 28 - 10COL2001 – Kit For Section 8

SPOOL POSITIONERS – SIDE OF RETURN

ON/OFF Electro - Hydraulic Control Connections

Connection Type 1: **Collector kit for external pilot and drain**

Sectional Appearance

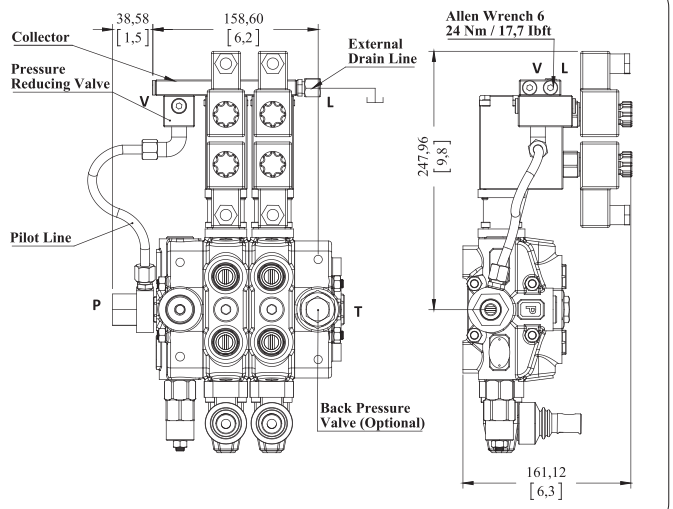

Diagram

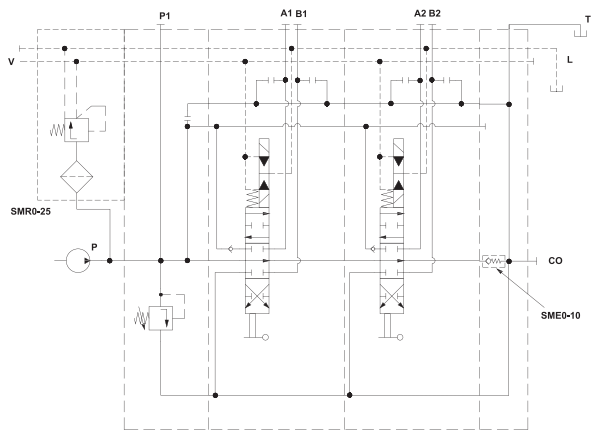

Operating Features
External Pressure Reducing Valve .....: 20 Bar / 290 Psi (For V line)
Code= ORV PD80-2P (SD(LA)-SMR2-125-PP)/P-1A-STL-80EH/ P-1A-STL-80EH (SMR0 -COL12-12V)/ SO-PT1 / SGT

Connection Type 2: **Collector kit with pilot and drain lines**

Sectional Appearance

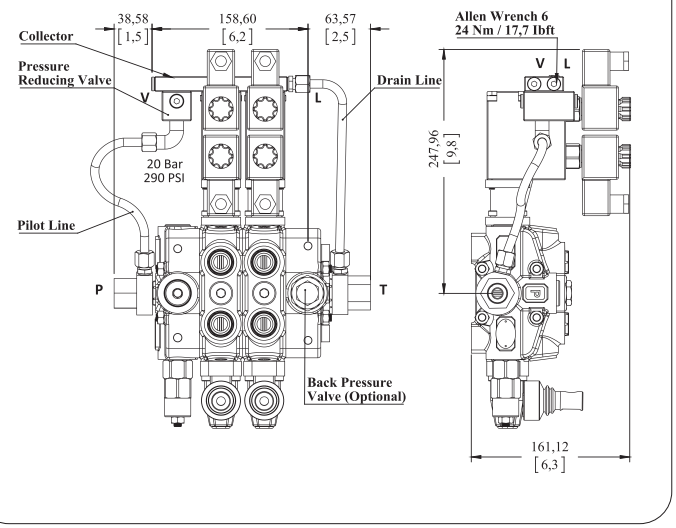

Diagram

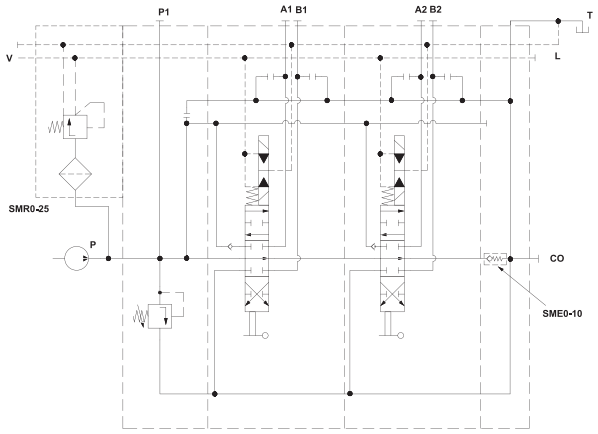

SMR 0-25 Valve Operating Features (Pressure reducing valve)
Outlet Pressure .....: 20 Bar / 290 Psi
Max. Flow.....: 8 l/min
Filtering .....:80 µ
Code= ORV PD80-2P (SD(LA)-SMR2-125-PP)/P-1A-STL-80EH/ P-1A-STL-80EH (SMR0 –COL22-12V)/ SO-PT1 / SGT

WORKING SECTION KIT

With Port Valves Type

Kit No: **P**

Sectional Appearance

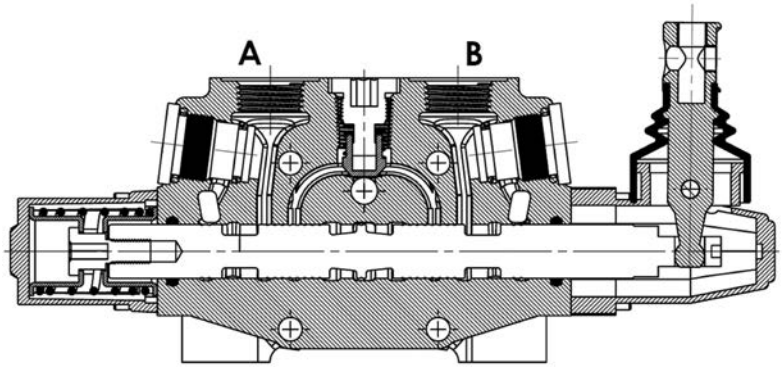

Diagram

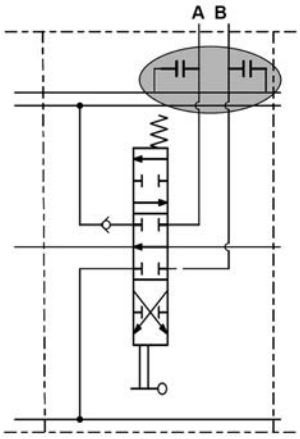

Without Port Valves Type

Kit No: **PA**

Sectional Appearance

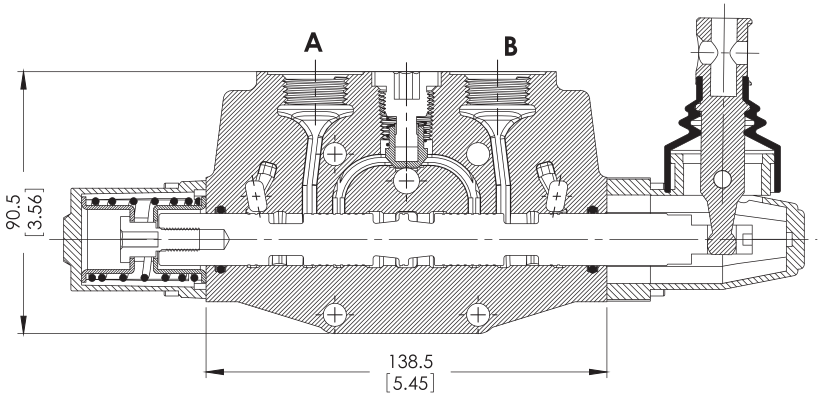

Diagram

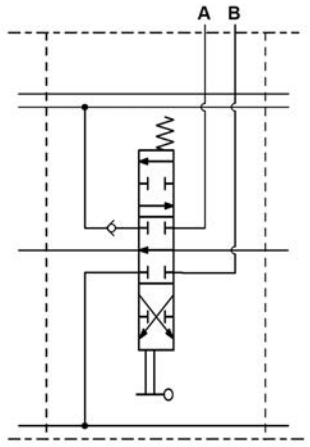

SPOOL POSITIONERS – SIDE OF LEVER CONTROL

Lever Controls

Kit No: **STL - L0**

Sectional Appearance

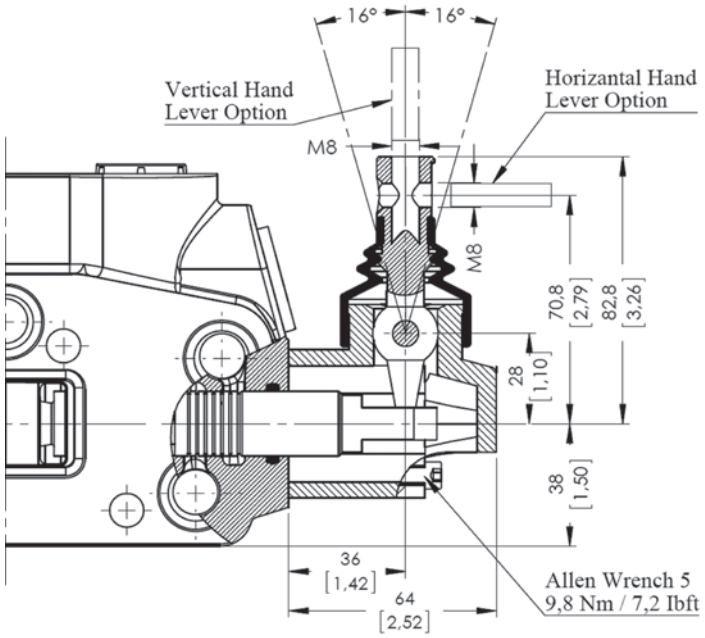

Diagram

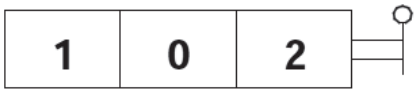

Kit No: **STL - L180**

Sectional Appearance

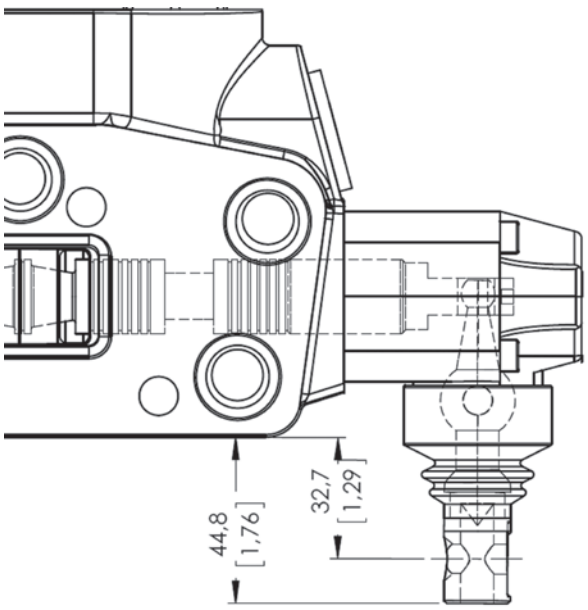

Diagram

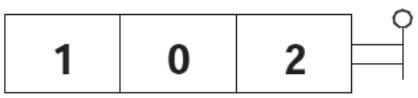

Note: Arm lever pivot box is aluminium cap protected. And it can be rotated 180º.

SPOOL POSITIONERS – SIDE OF LEVER CONTROL

Lever Controls - Joystick

Kit No: **JL**

Exploded View | Diagram

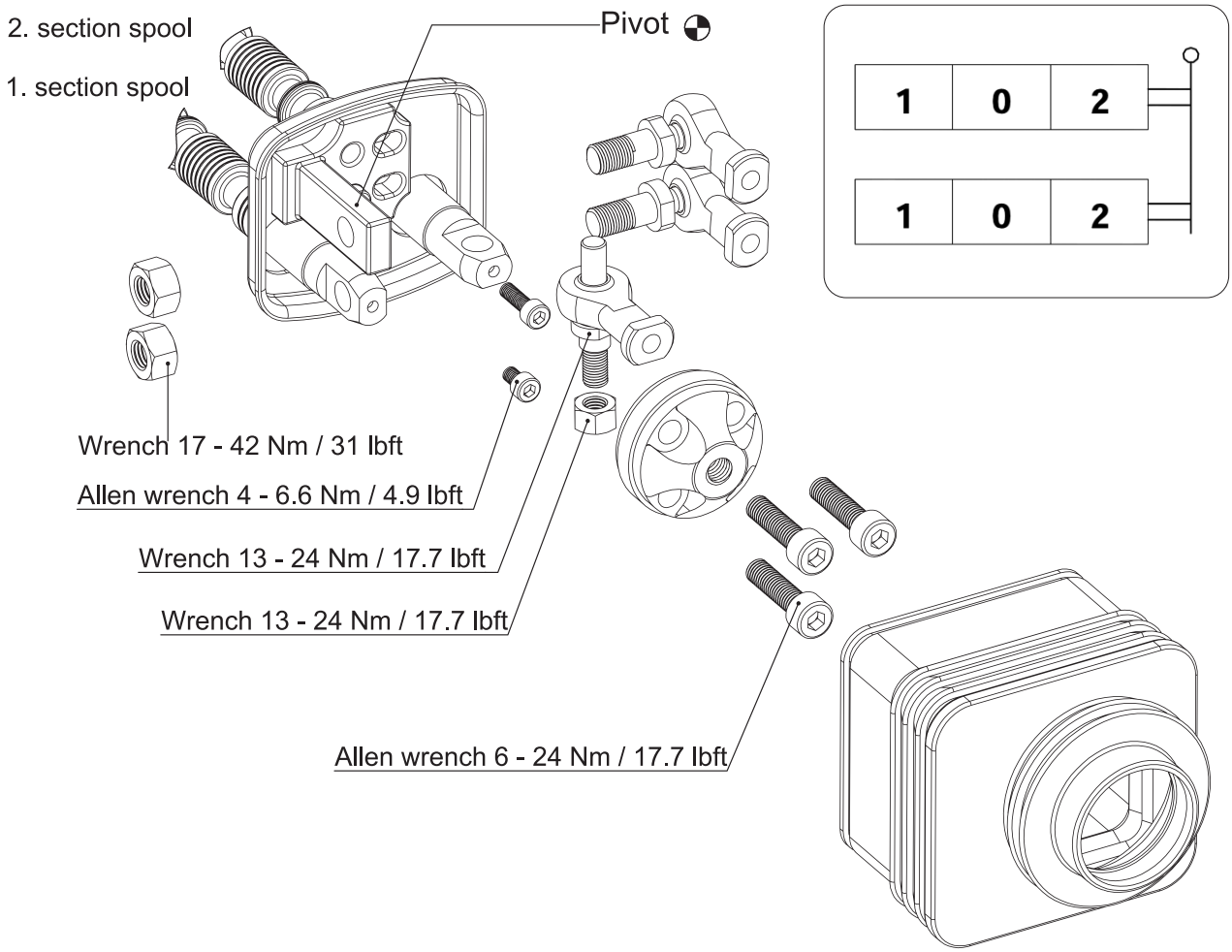

Operation Angle:

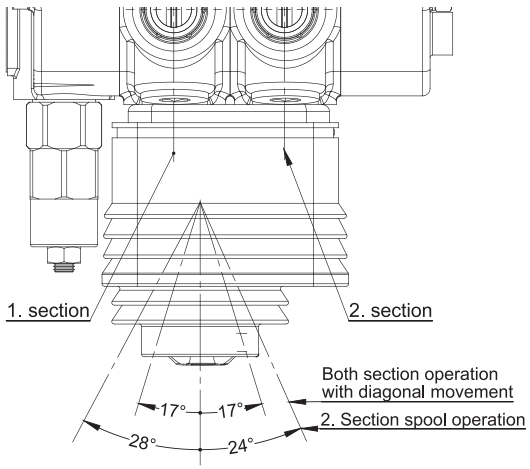

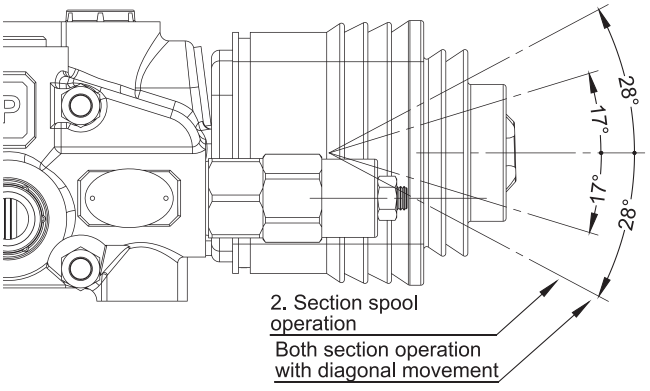

SPOOL POSITIONERS – SIDE OF LEVER CONTROL

Lever Controls - Joystick

Dimensions and movement sceme

Type No: **JL1** — **Application:** Pivot placed down on the Left

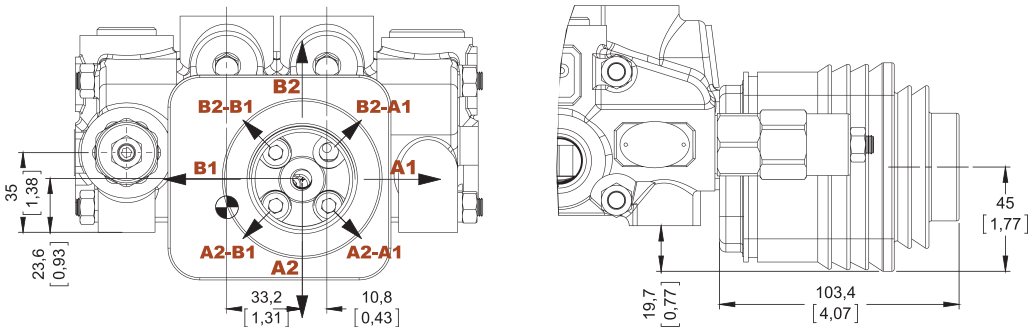

Type No: **JL2** — **Application:** Pivot placed down on the right

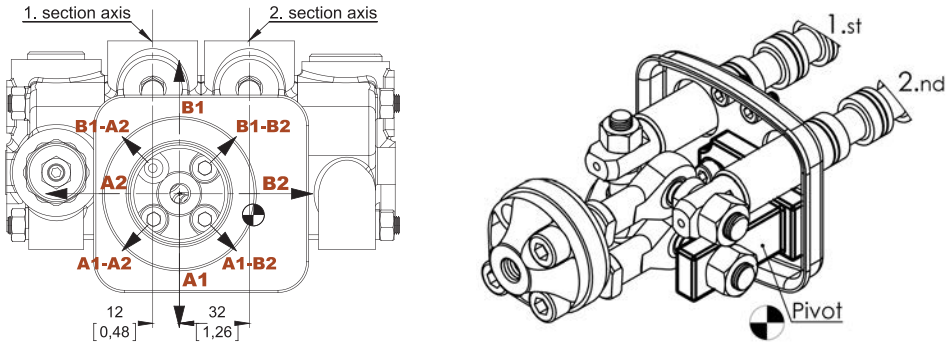

Type No: **JL3** — **Application:** Pivot placed above on the Left

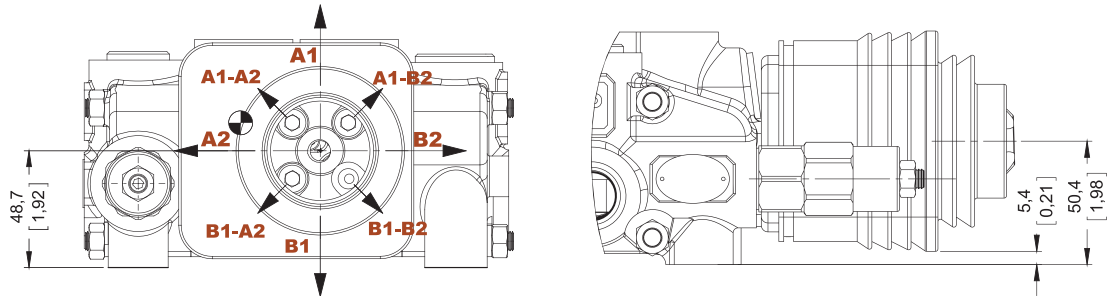

Type No: **JL4** — **Application:** Pivot placed above on the right

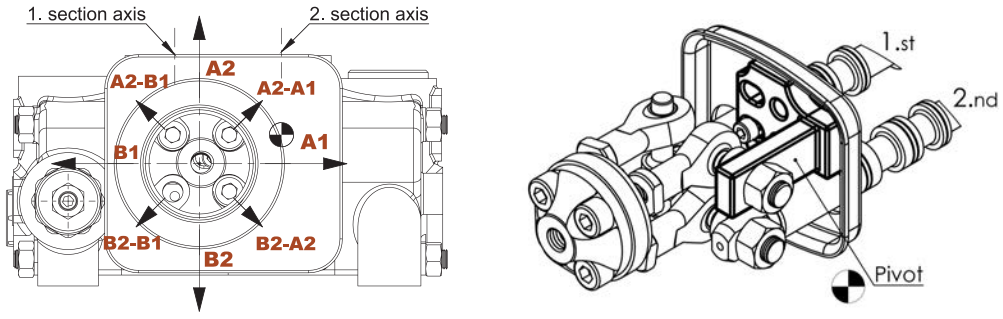

SPOOL POSITIONERS – SIDE OF LEVER CONTROL

Lever Controls - Cable Control

Kit No: **HL**

Sectional Appearance | Diagram

Waterproof cap prearranged for remote control with flexible cable.

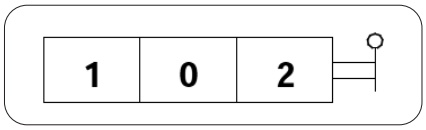

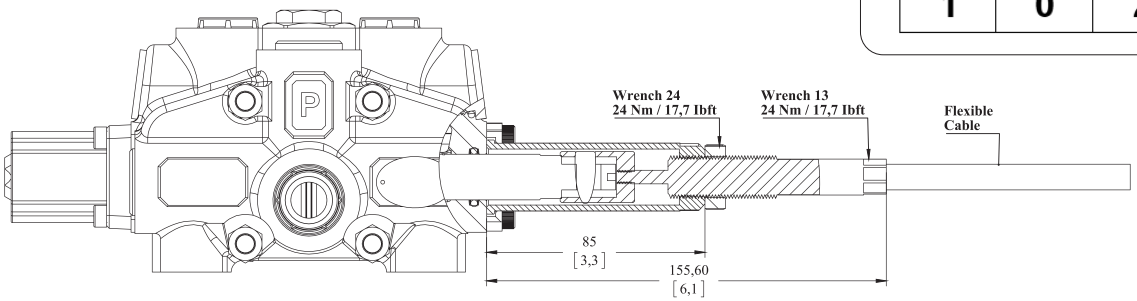

Note: Remote cable control is several options. Please indicte the cable length demanded and contact our sales department.

Example Operation

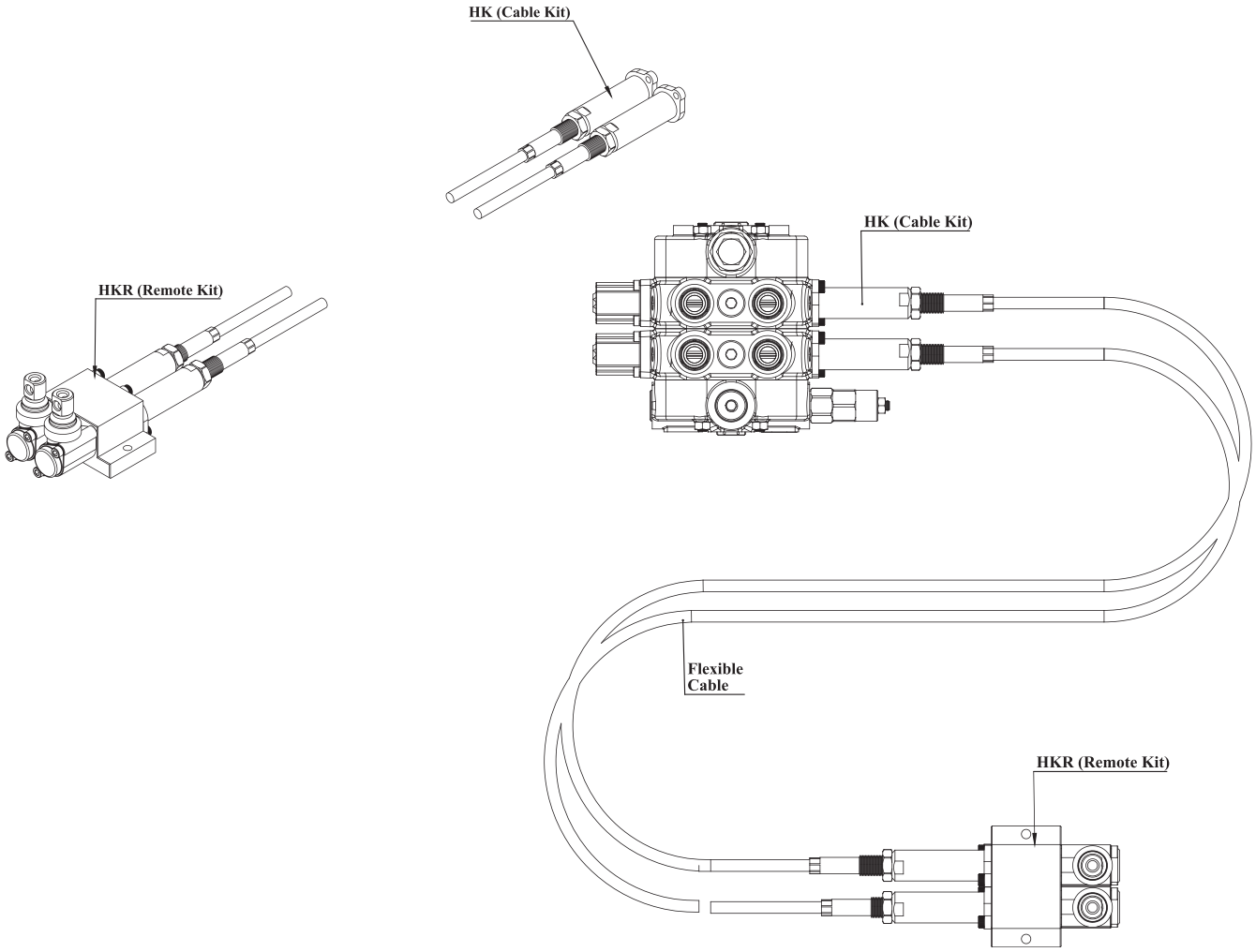

COMPLETE CONTROL – ON / OFF SELENOID CONTROL

ON/OFF Selenoid Control

Kit No: **SEC**

Sectional Appearance

Diagram

Electric wiring example

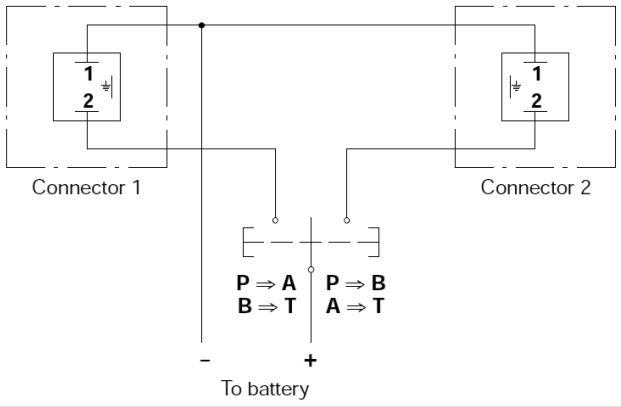

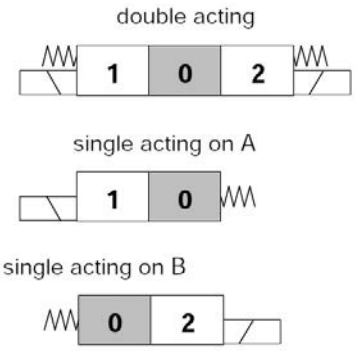

Operating Features

Max Working Pressure.....: 230 Bar / 3300 Psi
Max back pressure .....: 5 Bar / 80 Psi
Internal Lekage.....: 10 cm3 / min

Selenoid Operating Features

Nominal voltage.....: 12 VDC / 24 VDC
Power rating.....: 36 W
Duty cycle.....: %100
Nominal voltage tolerance.....: ±10
Coil insulation .....: Class H
Stroke.....: ±3

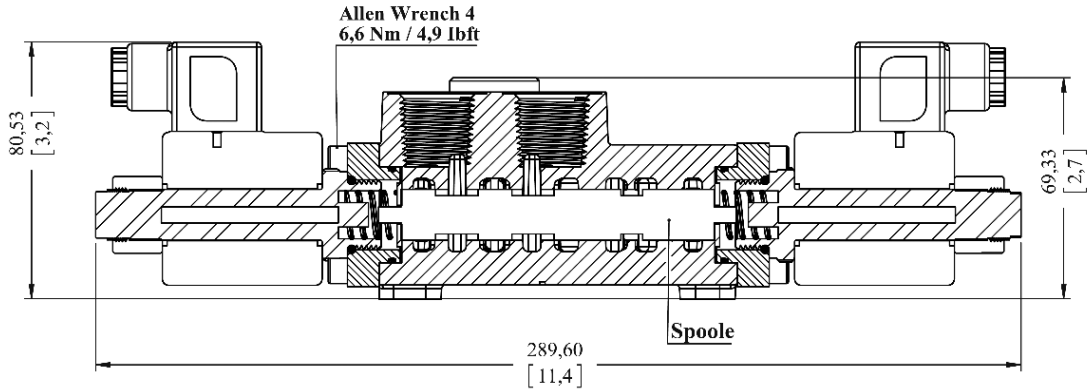

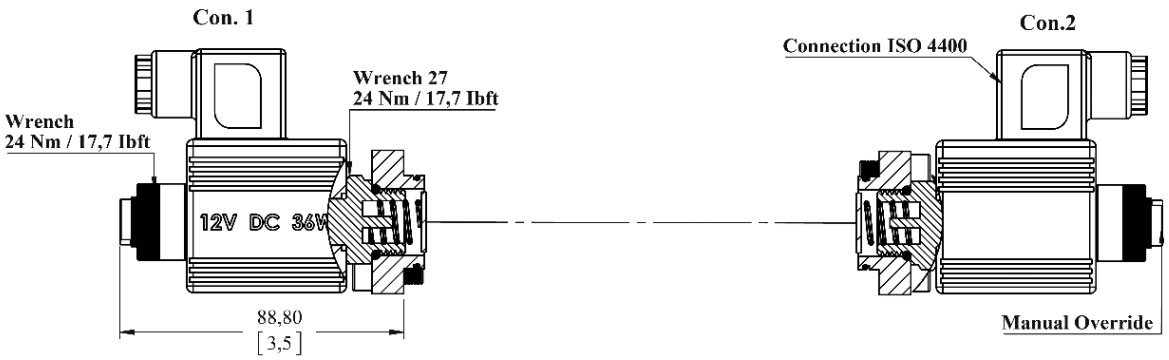

OUTLET COVER - TANK SIDE

Output Cover Options

Kit No: **SO**

Sectional Appearance

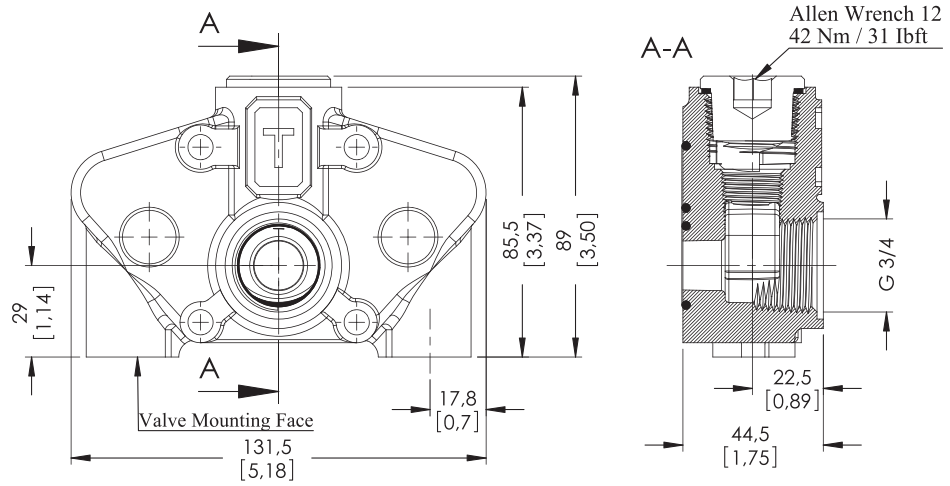

Kit No: **TO**

Sectional Appearance

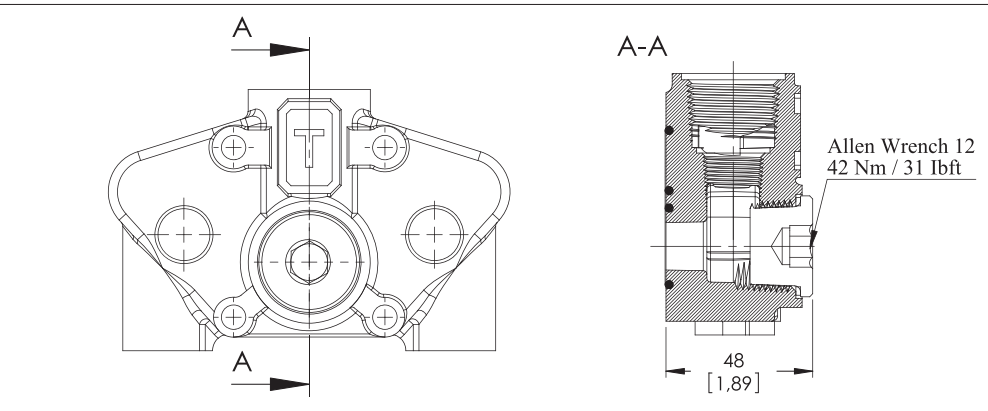

Hydraulic Diagram

Type No: **SO**

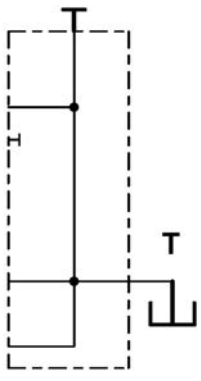

Type No: **TO**

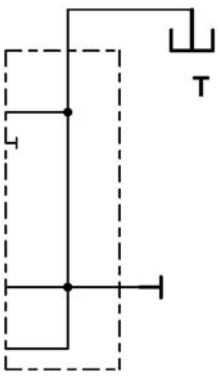

OUTLET COVER - TANK SIDE

Output Cover Options

Kit No: **TCO**

Sectional Appearance

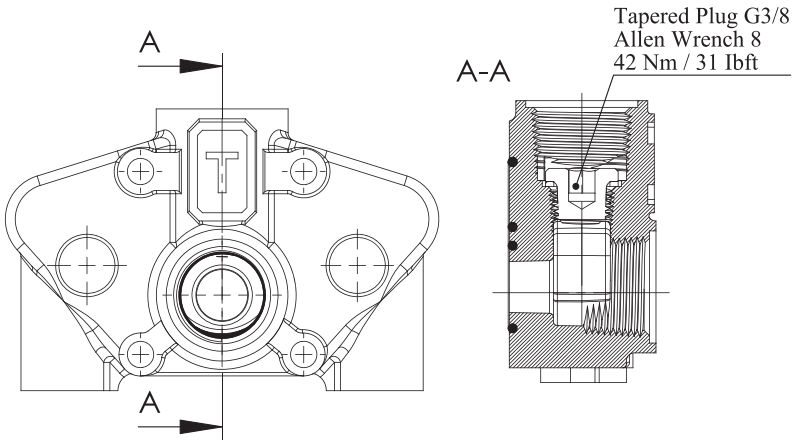

Kit No: **TC**

Sectional Appearance

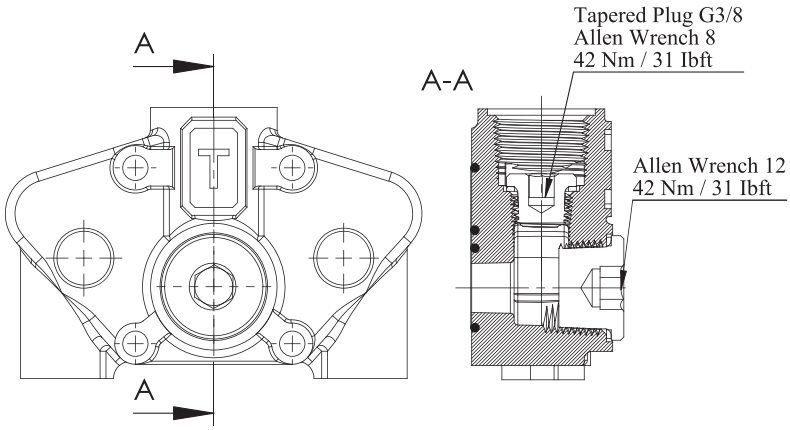

Hydraulic Diagram

Type No: **TCO**

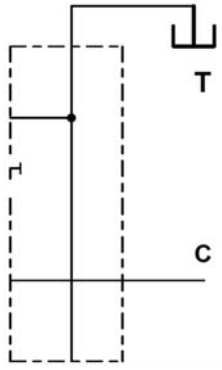

Type No: **TC**

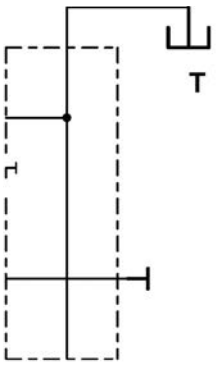

PORT VALVES OPTIONS

Anti Shock Valves

Code:

YAS-1 (T1-100)

- **Pressure Setting in Bar**
- **Adjusting type T=With screw , L=Valve Set / Spring Type (1,2,3)**
- **1 = Mounted Port A , 2 = Mounted Port B , 3 = Mounted Port A and B**

Hydraulic Diagram

Kit No: **YAS1**

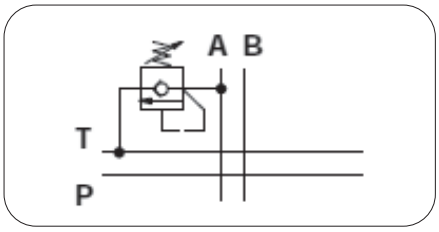

Kit No: **YAS2**

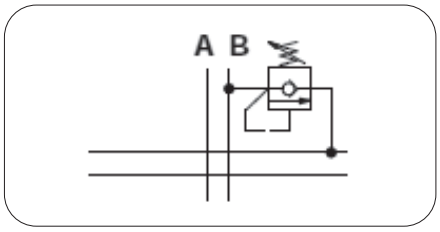

Kit No: **YAS3**

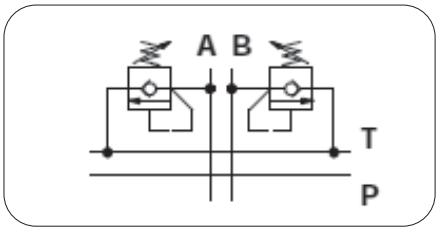

Adjustment Type on Valve:

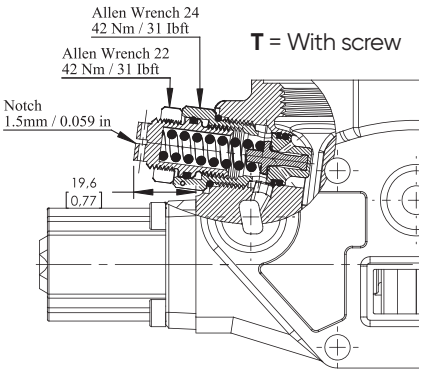

T = With screw

L = Valve set

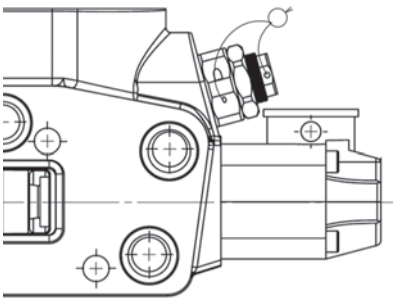

Performance Data:

Spring No=1 , Setting 50 bar / 725 psi

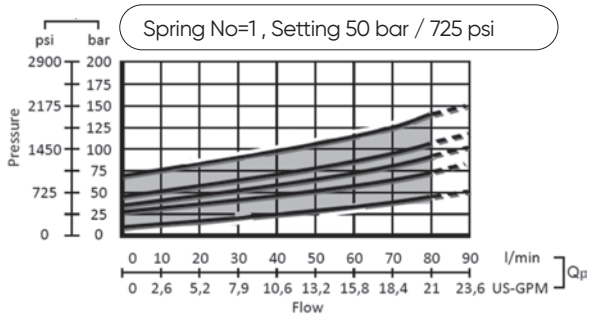

Spring No=2 , Setting 100 bar / 1450 psi

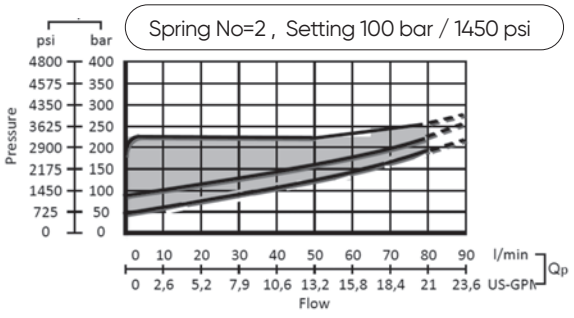

Spring No=3 , Setting 200 bar / 2900 psi

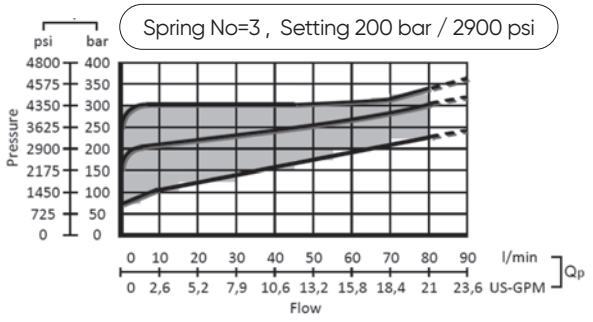

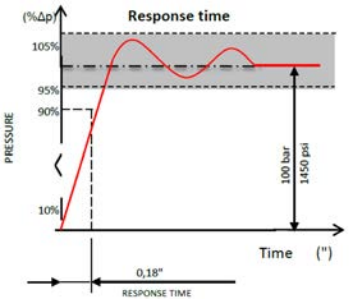

PORT VALVES OPTIONS

Anti shock And Anti Cavitation Valves

Code:

YAA-1 (T1-100)

- **Pressure Setting in Bar**
- **Adjusting type T=With screw , L=Valve Set / Spring Type (1,2,3)**
- **1 = Mounted Port A , 2 = Mounted Port B , 3 = Mounted Port A and B**

Hydraulic Diagram

Kit No: **YAA1**

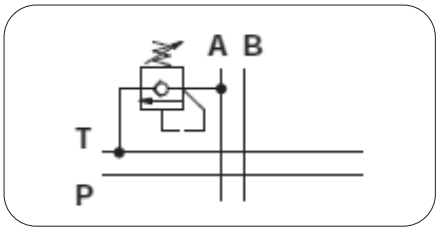

Kit No: **YAA2**

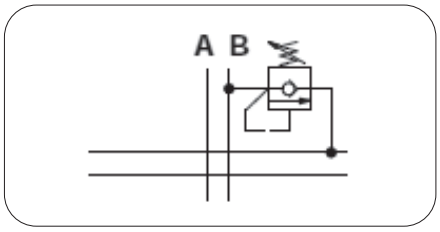

Kit No: **YAA3**

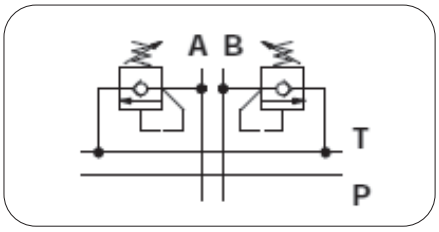

Adjustment Type on Valve:

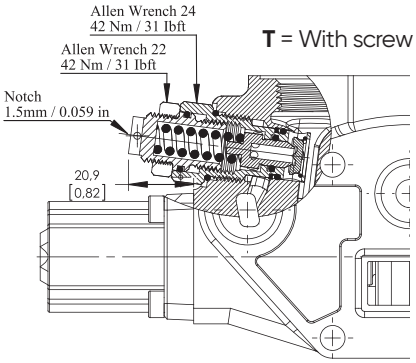

T = With screw

L = Valve set

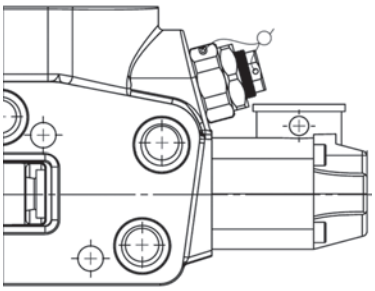

Performance Data:

Spring No=1 , Setting 63 bar / 900 psi

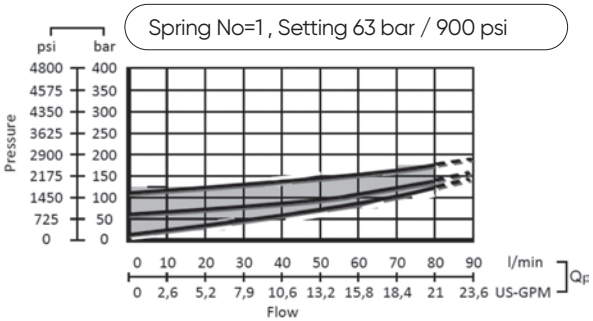

Spring No=2 , Setting 100 bar / 1450 psi

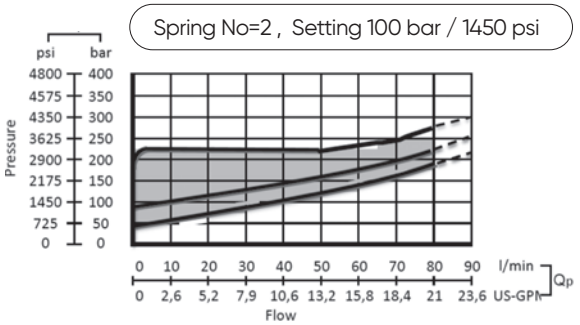

Spring No=3 , Setting 200 bar / 2900 psi

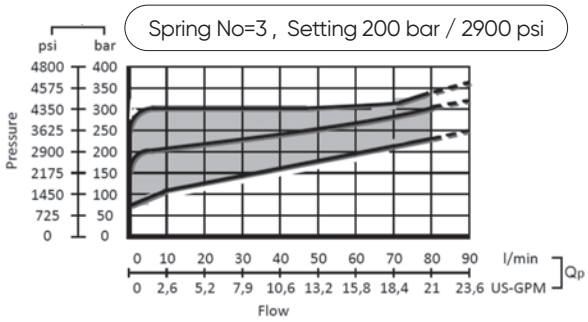

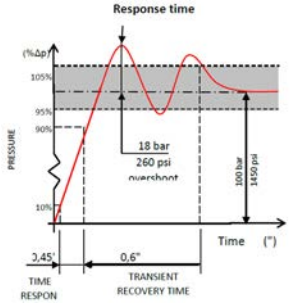

PORT VALVES OPTIONS

Anti Cavitation Valves

Code:

YAC-1 → **1 =** Mounted Port A , 2=Mounted Port B , 3=Mounted Port A and B

Hydraulic Diagram

Kit No: **YAC1**

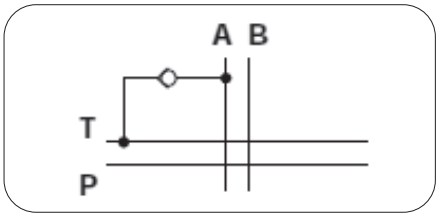

Kit No: **YAC2**

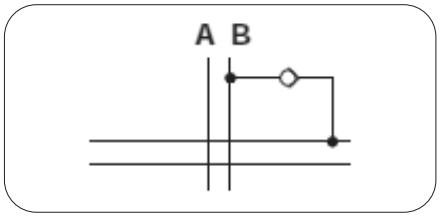

Kit No: **YAC3**

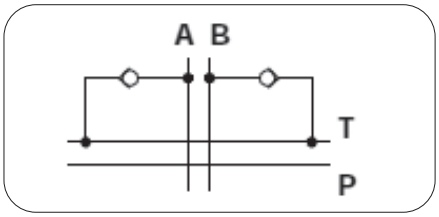

Adjustment Type on Valve And Data:

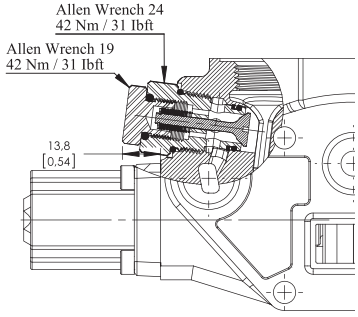

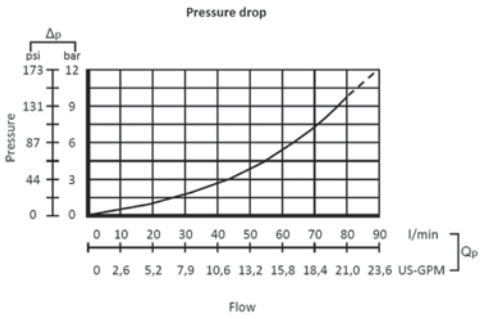

Valve Blaking

Plug with tank connection

DST-1 (1:Mounted port A – 2:Mounted port B)

Sectional Appearance

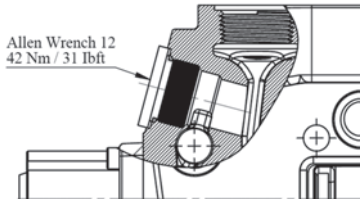

Hydraulic Diagram

DST1

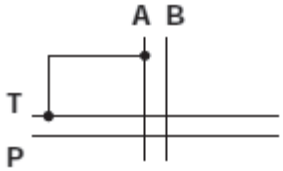

DST2

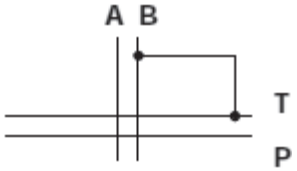

Plug

YP-1 (1:Mounted port A – 2:Mounted port B – 3:Mounted port A and B)

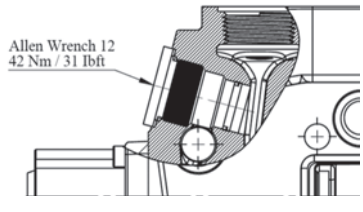

YP1

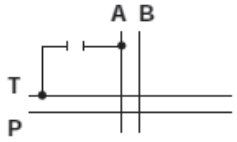

YP2

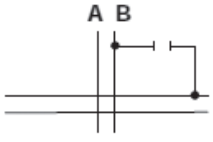

YP3

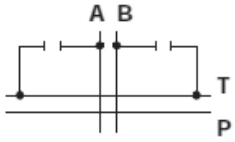

INSTALLATION AND MAINTENANCE

The ORV-PD80 valve is assembled and tested as per the technical specification of this catalog. Before the final installation on your equipment, follow the below recommendation:

• The valve can be assembled in any position, in order to prevent body deformation and spool sticking mount the product on a flat surface;

• In order to prevent the possibility of water entering the lever box and spool control kit, do not use high pressure wash down directly on the valve;

• Before painting, ensure plastic port plugs are tightly fitted.

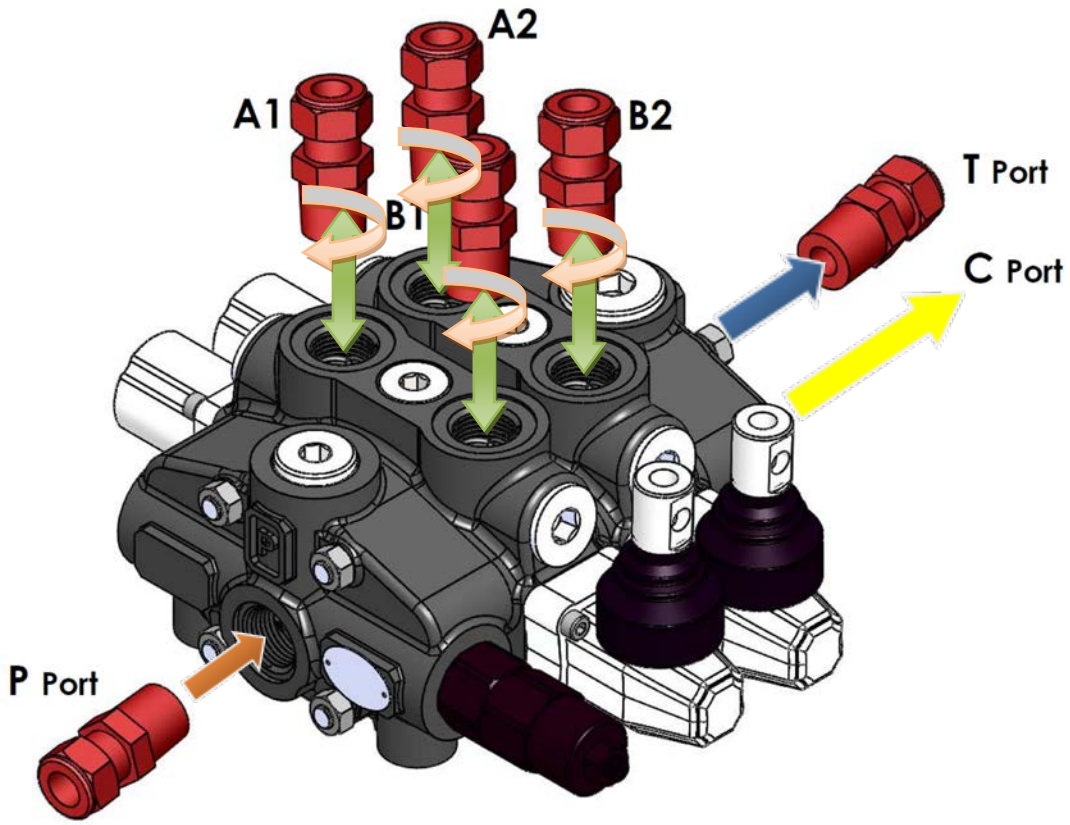

Threads Type (Nm / lbft)	P Port	A and B Port	T Port
BSP (ISO 228/1)	G 1/2	G 1/2	G 3/4
With O--Ring seal	50 / 36.9	50 / 36.9	70 / 51.6
With copper washer	60 / 44.3	60 / 44.3	70 / 51.6
With steel and rubber washer	60 / 44.3	60 / 44.3	70 / 51.6
BSP (ISO 228/1)	G 3/4	G 3/4	G 3/4
With O--Ring seal	70 / 51.6	70 / 51.6	70 / 51.6
With copper washer	70 / 51.6	70 / 51.6	70 / 51.6
With steel and rubber washer	70 / 51.6	70 / 51.6	70 / 51.6
UN--UNF (ISO 11926--1)	11/16--12 UNF--2B	9/16--18 UNF--2B	11/16--12 UNF--2B
With O--Ring seal	95 / 70	30 / 22.1	95 / 70
METRIC (ISO 262)	M27 x 2	M22 x 1.5	M27 x 2
With O--Ring seal	100 / 73.8	50 / 36.9	100 / 73.8
With copper washer	100 / 73.8	60 / 44.3	100 / 73.8
With steel and rubber washer	100 / 73.8	60 / 44.3	100 / 73.8

TECHNICAL DATA

Ports Dimensional Data

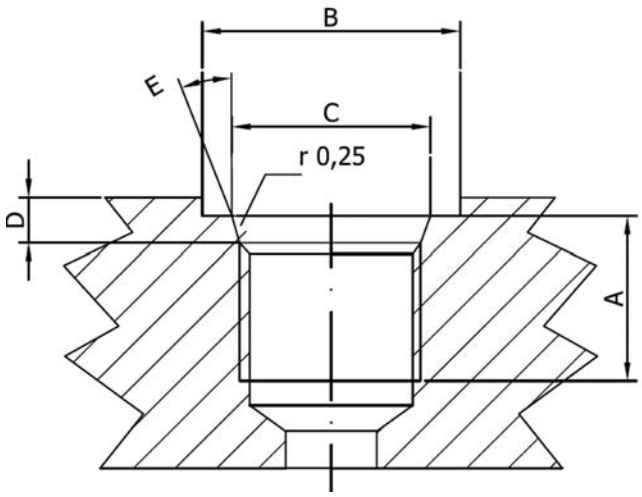

SAE UN-UNF (ISO 725)						
Dimensions		7/8-14 UNF SAE10		1"1/16-12 UN SAE12		1"5/16-12 UN SAE16	
mm	in						
A		17	0,67	20	0,79	20	0,79
B		34	1,34	41	1,61	49	1,92
C		23,9	0,94	29,2	1,15	35,5	1,40
D		2,5	0,10	3,3	0,13	3,3	0,13
E		15°		15°		15°	

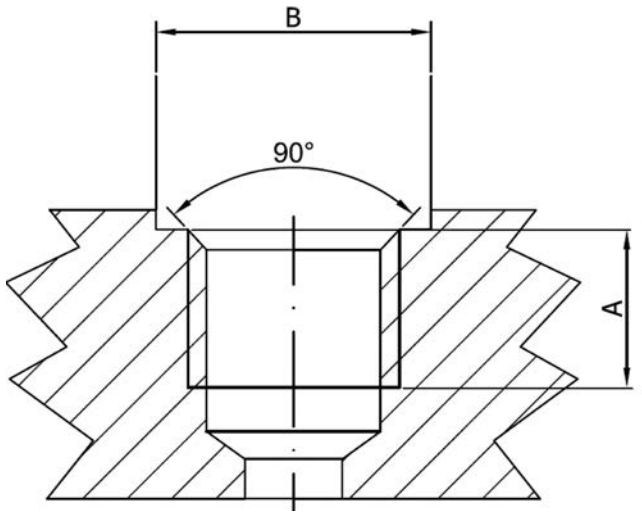

BSP (ISO 228)						
Dimensions		G 1/2"		G3/4		G1	
mm	in						
A		16	0,63	18	0,71	20	0,79
B		27	1,06	33	1,30	40	1,57

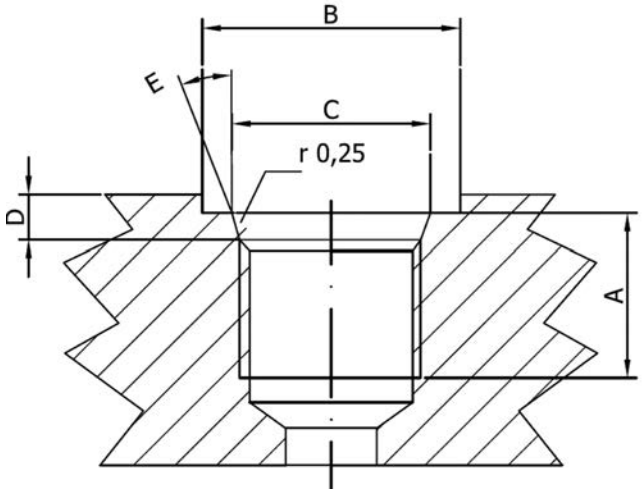

METRIC (ISO 262)					
Dimensions		M18x1,5 ISO 262		M27x2 ISO 262	
mm	in				
A		16	0,63	18	0,71
B		31,5	1,24	37,7	1,48

ORVAL HYDRAULIC

SECTIONAL
VALVES

ORV-PD100



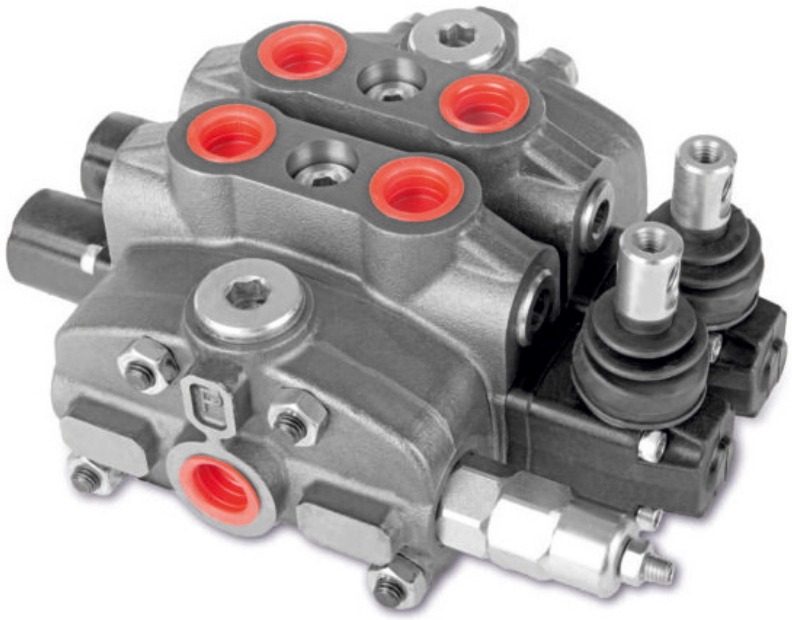

CONTENTS

Working Conditions	3
Dimensional Data	3
Hydraulic Circuit	3
Performance Data And Curve	3
Inlet Relief Options	3
Ordering Codes	3
Inlet Cover- Pump Side	3
Spool Options	3
Spool Positioners – Side of Return	3
Working Section Kit	3
Spool Positioners – Side of Lever Control	3
Spool Positioners – Side of Lever Control	3
Spool Positioners – Side of Lever Control	3
Spool Positioners – Side of Lever Control	3
Outlet Cover- Tank Side	3
Port Valves Options	3
Installation and Maintenance	3
Technical Data	3

Additional Informations

Note: This catalog shows the product in the most standard configurations. For Other Configurations, more detailed information or special request, Please contact Customer Service Dpt.

Warning!: All specifications of this catalog refer to the standard product at this date (01/2020). ORVAL, oriented to a continuous improvement, reserves the right to discontinue, modify or revise the specifications, without notice.

ORVAL IS NOT RESPONSIBLE FOR ANY DAMAGE CAUSED BY AN INCORRECT USE OF THE PRODUCT.

WORKING CONDITIONS

Nominal Flow Rating / Displacement	100 l/min	26 U.S.G.P.M
Maximum Working Pressure (Series Circuit)	210 Bar	3050 PSI
Maximum Working Pressure (Parallel Circuit)	315 Bar	4600 PSI
Max. Back Pressure	25 Bar	360 PSI
Oil Temperature with NBR Seals	-20 to 80 C°	-4 to 176 F °
with FPM (Viton) Seals	-20 to 100 C°	-4 to 212 F °
Oil Viscosity – Operating Range	From 15 to 75 mm2/s	From 15 to 75 cSt
Minumum / Maximum	12 / 400 mm2/s	12 / 400 cSt
Oil Filtration	≤30 µ	
Ambiant Temperature Range	-35 to 60 C°	-31 to 140 F °
Number Of Spools	1 to 12	
Internal Leakage (at 100 bar (1450 PSI), 40C° (110 F°), 46 cSt – A(B)–T)	4 cm3/min	0,24 in3/min
Max. Level Of Contamination	19/16 - ISO 4406	
Tie rod tightening torque	40 Nm	30 lbft

Not: This catalogue shows technical specifications measured with mineral oil of 46 mm2/s-46 cSt viscosity at 40 C° temparture.

Features

• Simple, compact and heavy duty designed sectional valves from 1 to 12 sections for open and closed center hydraulic systems.
• Optionaly Carry-Over port only tandem circuit.
• Fitted with a main pressure relief valve.
• Interchangeable spool diametre is 20 mm – 0,79 in.
• Available manual, pneumatic, hydraulic and electro-pneumatic spool control kits.

DIMENSIONAL DATA

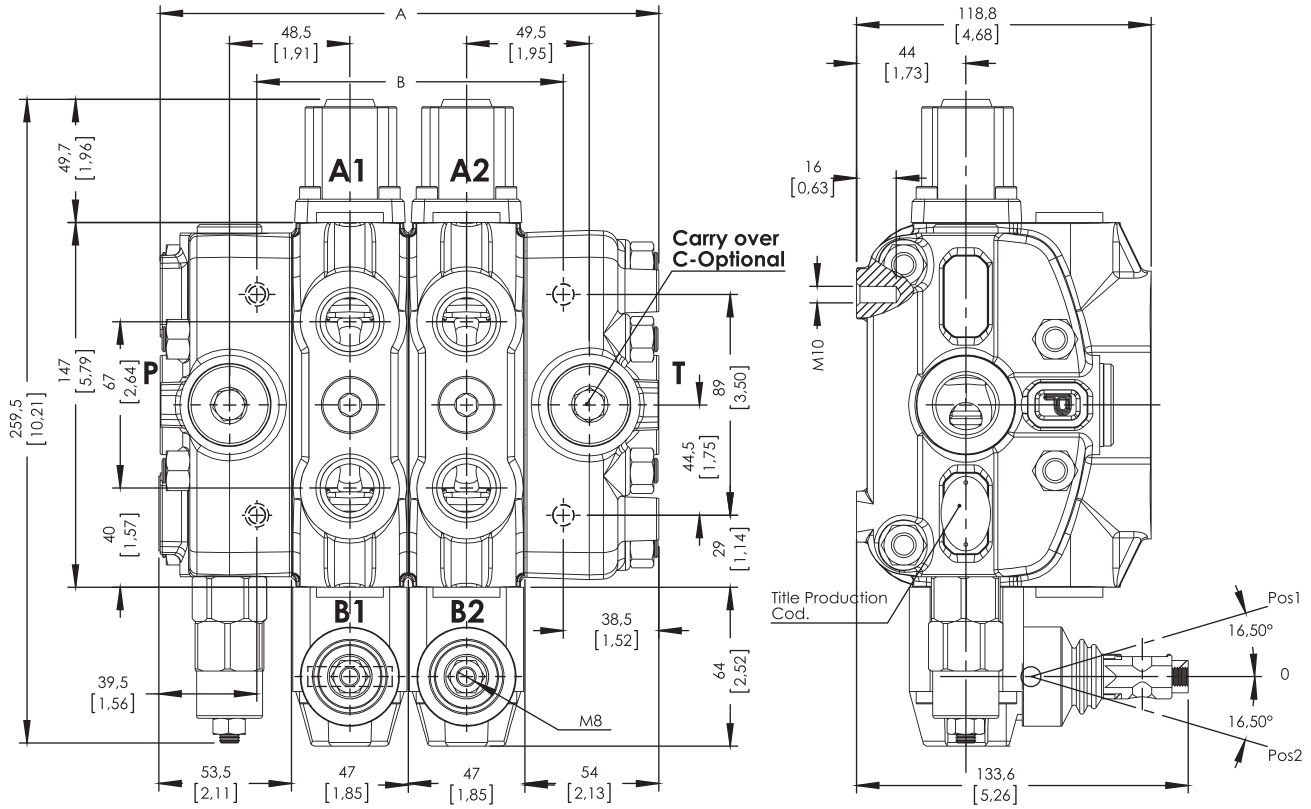

TYPE	A		B		Weight	
	mm	in	mm	in	Kg	lb
ORV- PD100-1P	201.5	7.94	123.5	4.86	10.90	24.03
ORV- PD100-2P	248.5	9.79	170.5	6.71	15.60	34.39
ORV- PD100-3P	295.5	11.64	217.5	8.56	20.30	44.75
ORV- PD100-4P	342.5	13.49	264.5	10.41	25.00	55.12
ORV- PD100-5P	389.5	15.34	311.5	12.26	29.70	65.48
ORV- PD100-6P	436.5	17.19	358.5	14.11	34.40	75.84
ORV- PD100-7P	483.5	19.04	405.5	15.96	39.10	96.20
ORV- PD100-8P	530.5	20.89	452.5	17.81	43.80	96.56
ORV- PD100-9P	577.5	22.74	499.5	19.66	48.50	106.92
ORV- PD100-10P	624.5	24.59	546.5	21.51	53.20	117.29
ORV- PD100-11P	671.5	26.44	593.5	23.36	57.90	127.65
ORV- PD100-12P	718.5	28.29	640.5	25.11	62.60	138.01

STANDARD THREADS

PORT	BSP (Iso 228) 1/2" Series	BSP (Iso 228) 3/4"Series	UN-UNF (Iso 11926-1)	Metric (Iso 262)
P Inlet	G 1/2	G 3/4	1 1/16-12 UN	M27x2
A-B Ports	G 1/2	G 3/4	7/8-14 UNF	M22x1.5
T Outlet	G 3/4	G 3/4	1 1/16-12 UN	M27x2
Pneumatic	G 1/4	G 1/4	NPTF 1/8 - 27	NPTF 1/8 - 27
Carry-Over	G 3/8	G 3/8	3/4-16 UNF	G 3/8

HYDRAULIC CIRCUIT

Parallel

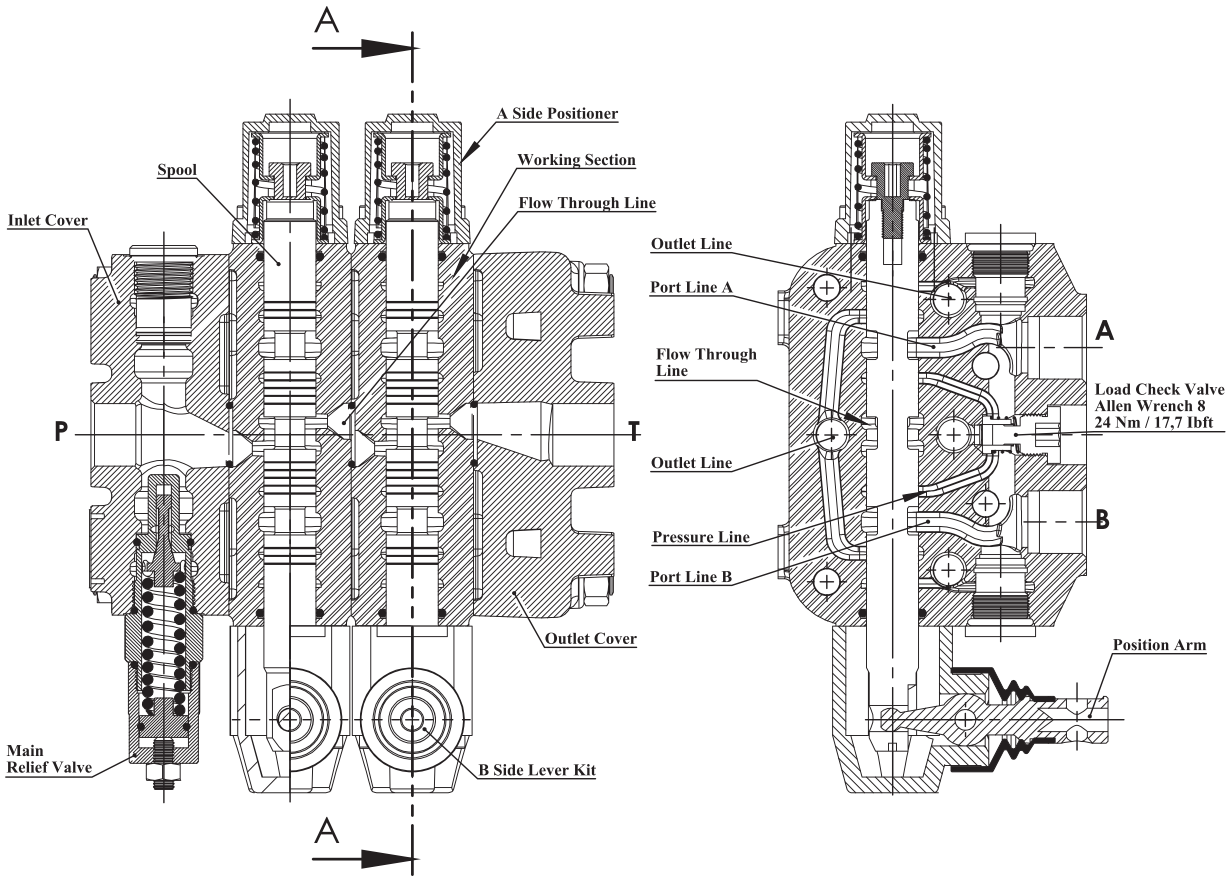

Code: ORV PD100-2P (SD(LA)-SMR2-125-PP)/P-1A-STL-SR/ P-1A-STL-SR/ SO-PT1 / SGT

HYDRAULIC CIRCUIT

Inlet Cover – Pump Side

SD - Side inlet with direct pressure relief valve
TD - Top inlet with direct pressure relief valve
SP - Side inlet with relief valve blanking plug

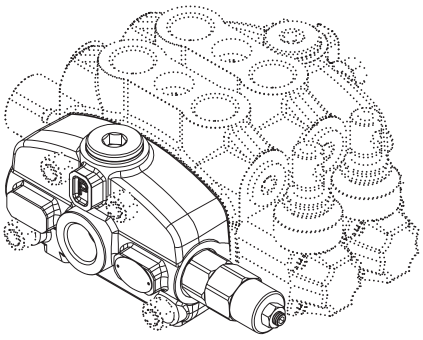

Type = SD

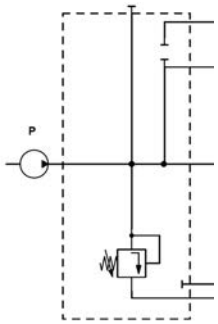

Type = TD

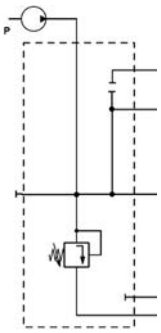

Type = SP

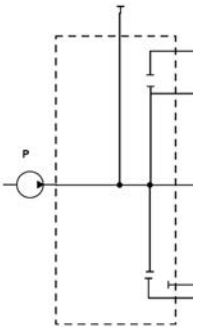

Working Sections

P – Parallel

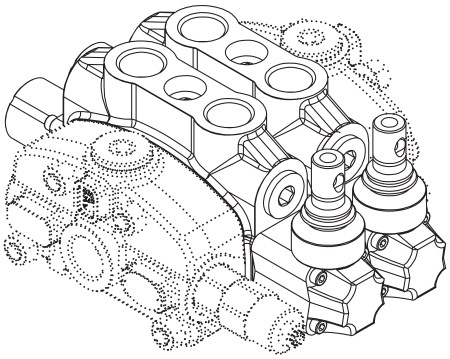

Type = P

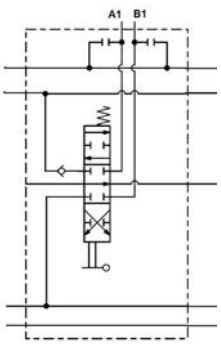

HYDRAULIC CIRCUIT

Outlet Cover (Tank Side)

SO - Side outlet
TO - Top outlet
TCO - Top outlet with carry-over
TC - Top outlet with closed centre

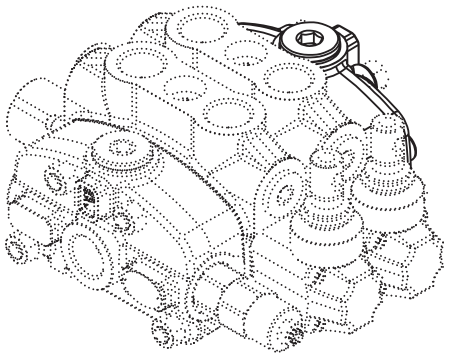

Type = SO

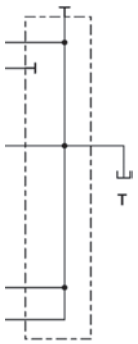

Type = TO



Type = TCO

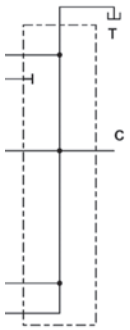

Type = TC

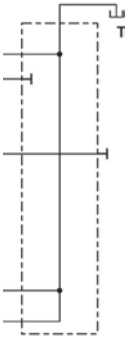

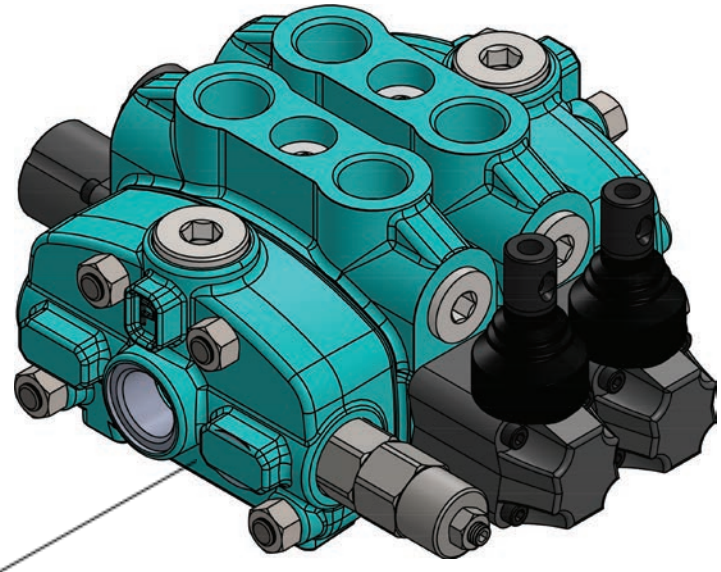

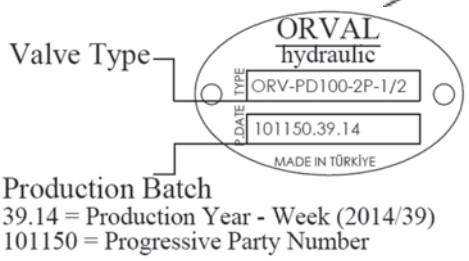

39.14 = Production Year - Week (2014/39)
101150 = Progressive Party Number

HYDRAULIC CIRCUIT

Standard Configurations With Top Inlet And Outlet Ports - RH (Right Inlet)

A symetrical body allows the reverse assembly of spool.

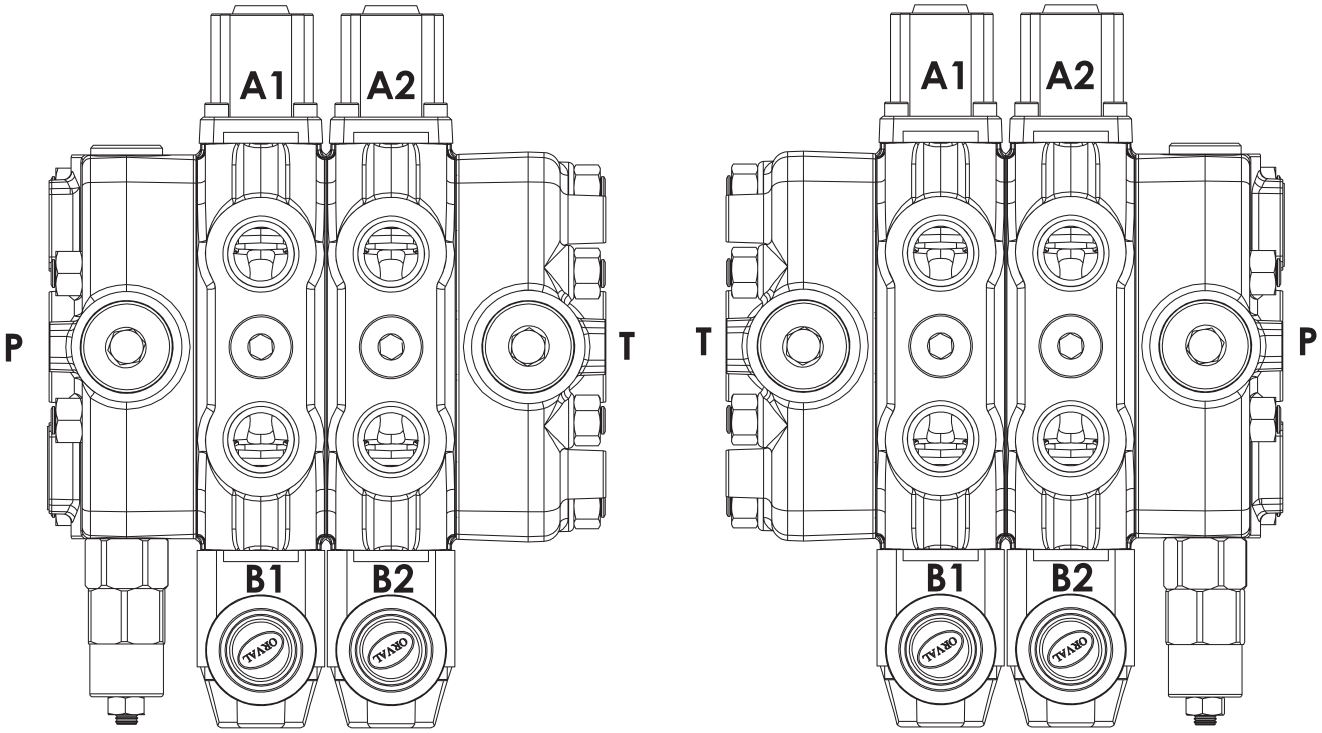

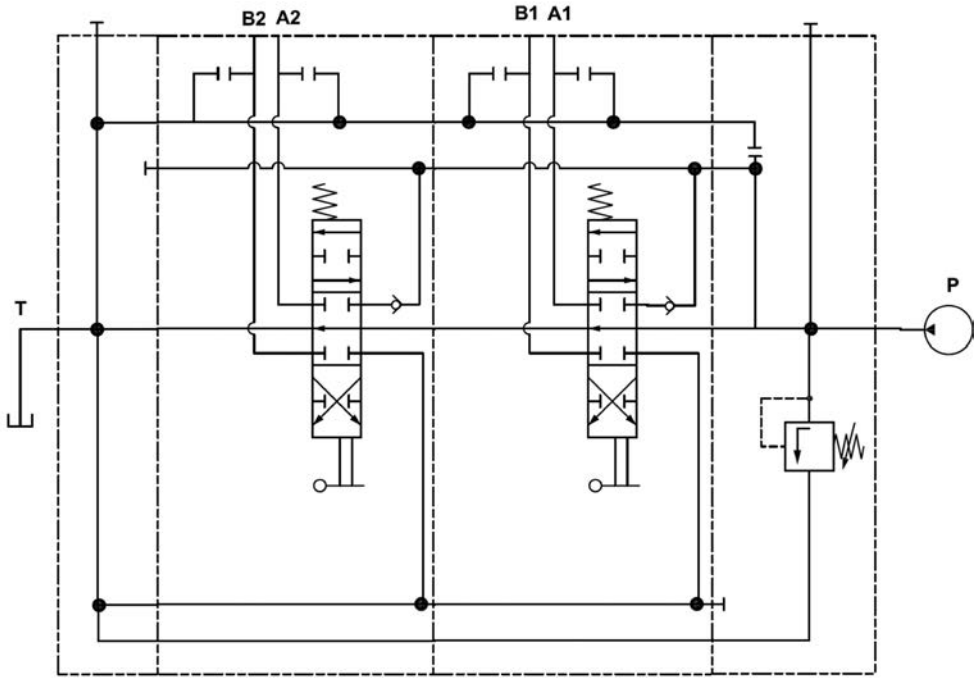

Code: ORV PD100-2P (SD(RA)-SMR2-125-PP)/P-1A-STL-SR/ P-1A-STL-SR/ SO-PT1 /

PERFORMANCE DATA AND CURVE

Open Center - Pressure Drop (P-T)

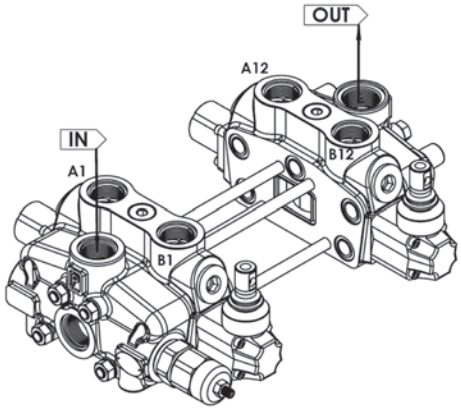

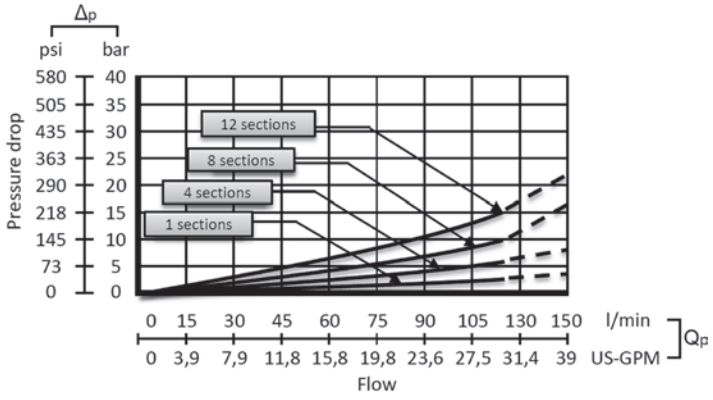

Inlet to Work Port - Pressure Drop (P-A/B)

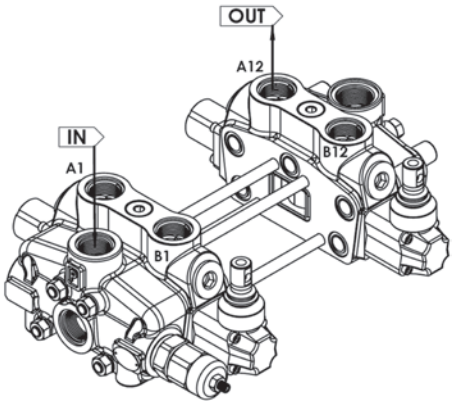

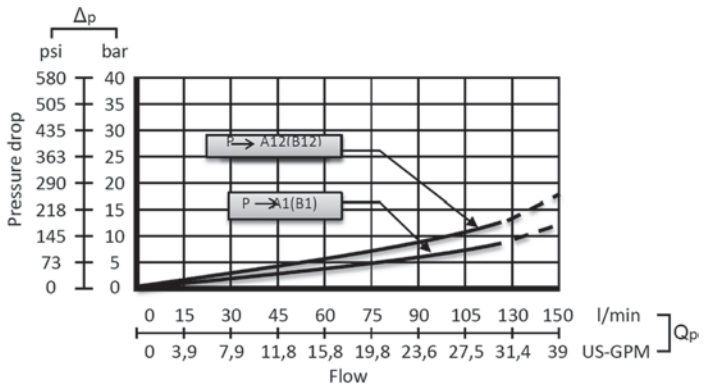

Work Port to Outlet - Pressure Drop (A/B-T)

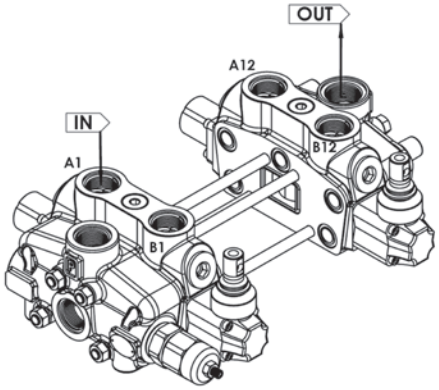

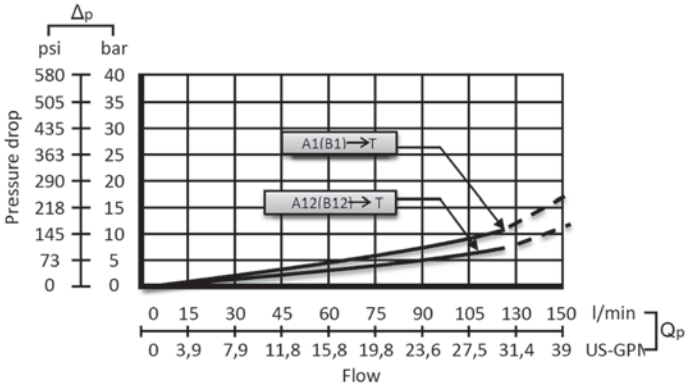

INLET RELIEF OPTIONS

Direct Pressure Relief Valve

Code:

SMR2 – 125

- **Pressure Setting Bar in (Standard 125 bar)**
- **Standard Main Relief Spring Type -2**

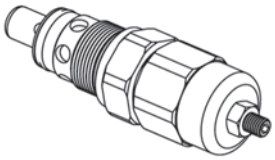

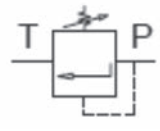

Performance Data

Spring Type Number: 1
Setting= 80 Bar -Range=63-125 Bar

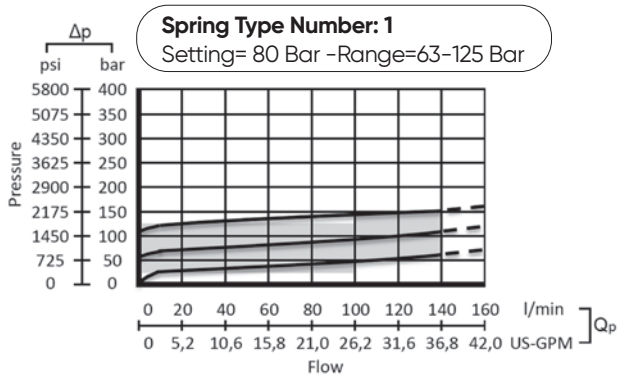

Spring Type Number: 2
Setting= 125 Bar -Range=100-165 Bar

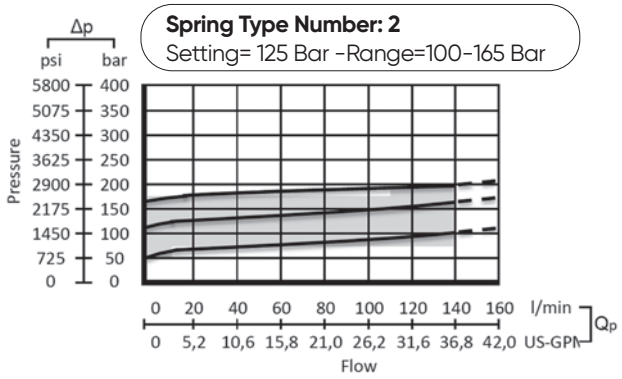

Spring Type Number: 3
Setting= 175 Bar -Range=125-250 Bar

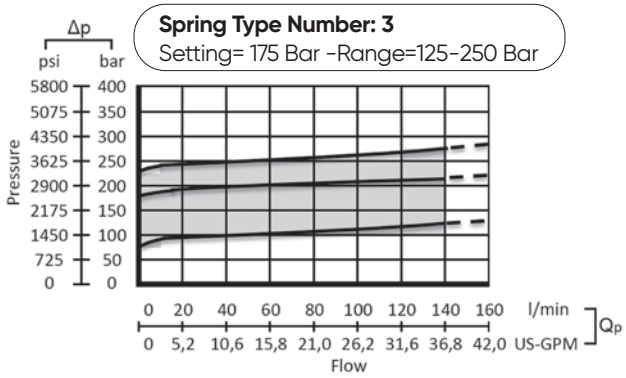

Spring Type Number: 4
Setting= 220 Bar -Range=200-315 Bar

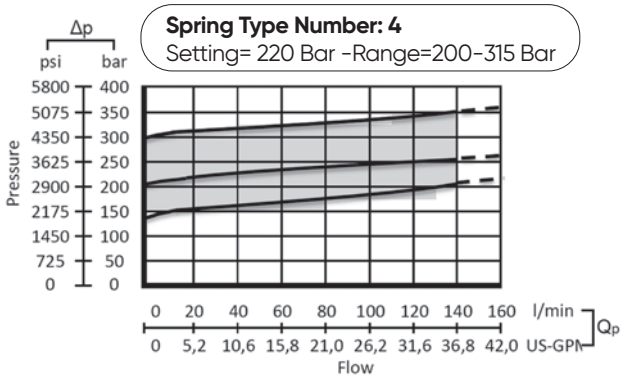

Adjustment Type on Valve

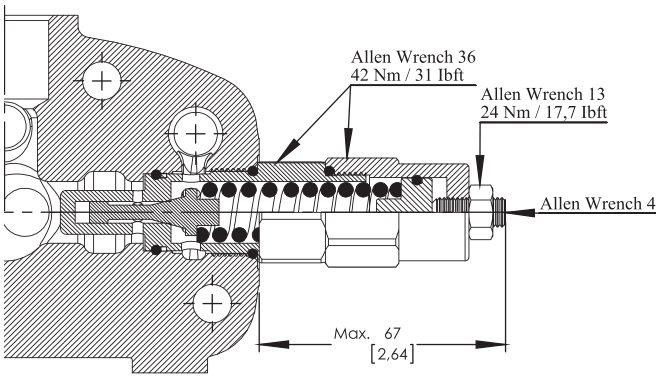

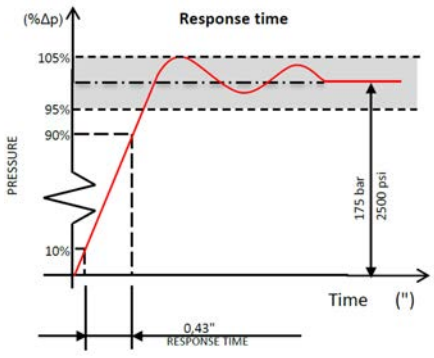

INLET RELIEF OPTIONS

Direct Pressure Relief Valve

Kit No: **PAC**

Sectional Appearance

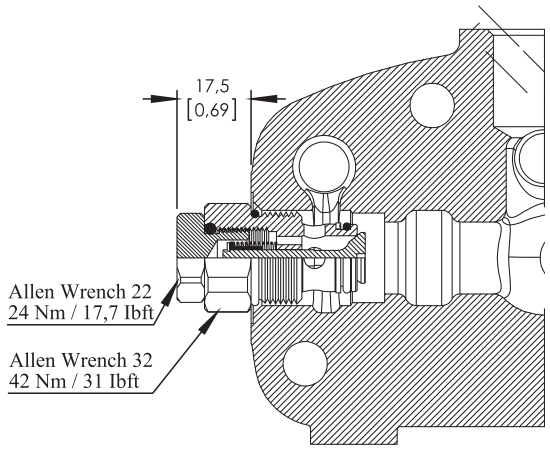

Diagram

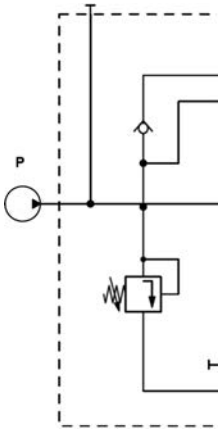

Performance Data

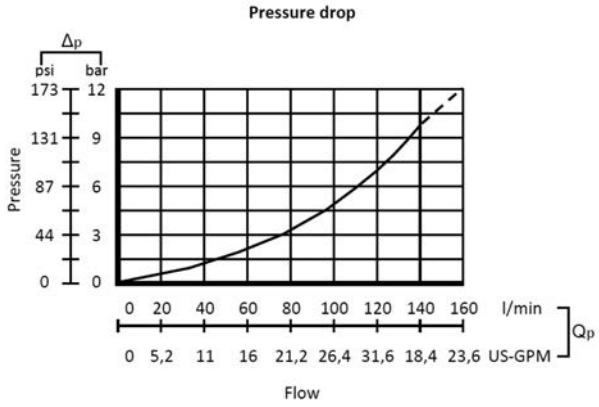

Relief Blanking Plug - SP

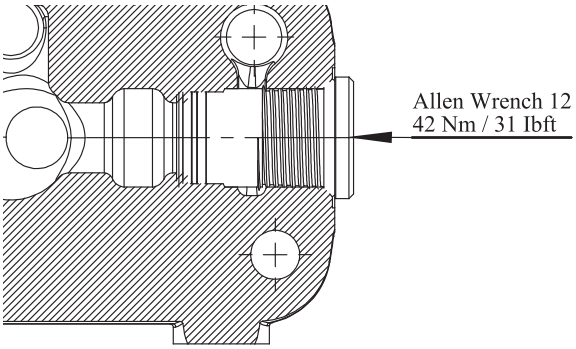



ORDERING CODES

Order Example

ORV PD100-2P (SD-SMR2-125-PP)/P-1A- STL- YAC-SR / P-1A-STL-150P / SO-PT1-CO / SGT

- Base Code "0"
- 1 st Section: 1, 1.2, 1.4, 2.1, 2.3, 2.6, 2.2, 2.4
- Following Section: P-1A-STL-150P
- Output Section: 3.1, 3.3, 3.2

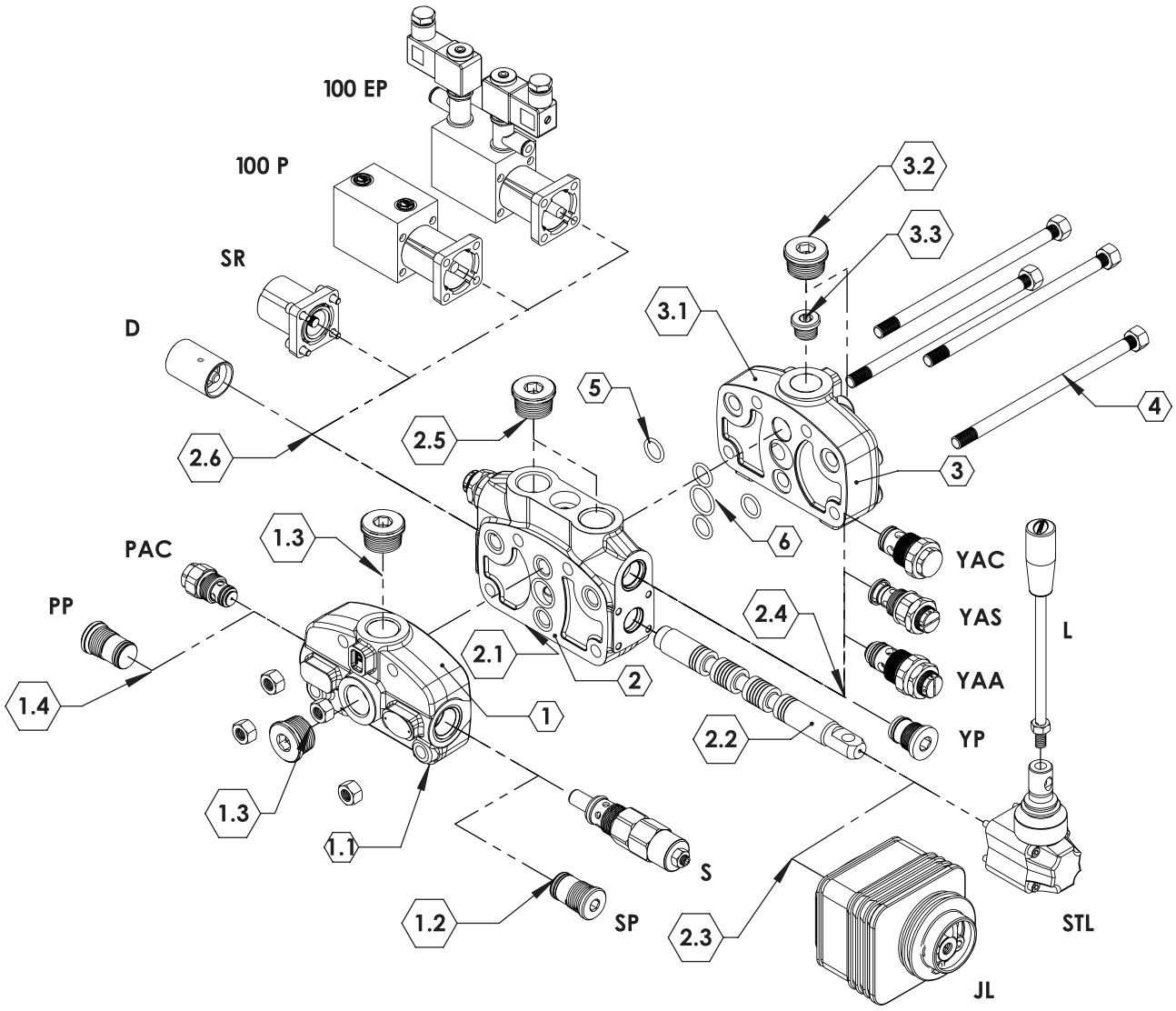

ORDERING CODES

1- Inlet Section

ORV PD100-2P PD100 = Valve Type-(PD)- Sectional
(100) - Max. Flow Rate
2P =Sections Quantity
SD = Side inlet with direct pressure relief valve (1SD100100)
TD = Top inlet with direct pressure relief valve (1TD100100)
SP = Side inlet with relief valve blanking plug (1SP100100)

2- Working Section

P = Parallel (2P100100)

3- Output Section

SO = Side outlet (3SO100100)
TO = Top outlet (3TO100100)
TCO = Top outlet with carry-over (3TCO100100)
TC = Top outlet with closed centre (3TC100100)

4- Assembling Kit

Tie rod kit for 1 section valve - (4TRK1100100)
Tie rod kit for 2 section valve - (4TRK2100100)
Tie rod kit for 3 section valve - (4TRK3100100)
Tie rod kit for 4 section valve - (4TRK4100100)
Tie rod kit for 5 section valve - (4TRK5100100)
Tie rod kit for 6 section valve - (4TRK6100100)
Tie rod kit for 7 section valve - (4TRK7100100)
Tie rod kit for 8 section valve - (4TRK8100100)
Tie rod kit for 9 section valve - (4TRK9100100)
Tie rod kit for 10 section valve - (4TRK10100100)
Tie rod kit for 11 section valve - (4TRK11100100)
Tie rod kit for 12 section valve - (4TRK12100100)

5-6- O_Ring Kit

5. -17.00x2.65 NBR 70 SH O-Ring seal (3 Qty.) (5MK150100)
6. -34.60x2.65 NBR 70 SH O-Ring seal (1 Qty.) (6MK150100)

1.*-Inlet Options

1.1 Inlet Cover
Body = Standard (11BS100100)
1.2 Inlet Relief
SMR1-080 – (12SMR1150080)–Range 63-125 bar
Setting 80 bar
SMR2-125 – (12SMR2150125)– Range 100-160 bar
Setting 125 bar
SMR3-175 – (12SMR3150175)– Range 125-250 bar
Setting 175 bar
SMR4-220 – (12SMR4150220)–Range 200-315 bar
Setting 220 bar
1.3 Ports Plug
PA1 = G1/2 Top and side input - (13PA180100)
PA2= G3/4 Top and side input –(13PA280100)
1.4 Inlet Valve
PAC =Inlet anti-cavitation valve –(14PAC150100)
PP(SP) = Relief valve blanking plug –(14PSP150100)

2.*- Working Options

2.1 Working Section
PA = Without ports valve prearrangement, with parallel circuit - Body (21BSPA100100)
2.2 Spool Options
1A -(22SS100110) – 3 Positions ,Double acting
2A -(22SS100120) – 3 Positions ,Double acting
A to tank B Blocked
3A -(22SS100130) – 3 Positions ,Double acting
B to tank A blocked
4A -(22SS100140) – 3 Positions ,Double acting
A and B tank
5A -(22SS100150) – 3 Positions ,Single acting on
A (A to tank)
6A -(22SS100160) – 3 Positions ,Single acting on
B (B to tank)
2.3 Lever Options
L = Standard HandLever (L=120mmxM10) - (7L040100)
JL =Joystick lever for two sections operation (5JL 080100)
STL = Standard Lever –(23STL150100)
HL = Remote Cable Kit – (80HL80100)
2.4 Port Relief Valves
Anti-Shock Valve
YAS (T1-50) – (24YAC150050)–Range 35-70 bar
Setting 50 bar
YAS (T1-100) – (24YAC150100)–Range 63-220 bar
Setting 100 bar
YAS (T1-200) – (24YAC150200)–Range 180-350 bar
Setting 200 bar
Anti-Shock and Anti-Cavitation Valve
YAA (T1-63) – (24YAA150063)–Range 35-70 bar
Setting 50 bar
YAA (T1-100) – (24YAA150100)–Range 63-220 bar
Setting 100 bar
YAA (T1-200) – (24YAA150200)–Range 180-350 bar
Setting 200 bar
YAC - Anti Cavitation– (24YAS150100)
YP- A and B ports valve blanking plug (24YP150100)
DST-A and B ports valve blanking plugs with
connection to tank–(24DST150100)
2.5 Ports Plug Options
PL1 =Plug for single action spool for 2A-3A, G1/2
(25PL180100)
PL2 =Plug for single action spool for 2A-3A, G3/4
(25PL280100)
2.6 Spool Positioners
SR=Spring Return in neutral position – (26SR150100)
D =Detent in position 1, neutral and 2 -(26D150100)
100P=ON/OFF Pneumatic – (2645P150100)
100EP=12 VDC ON/OFF electro-pneumatic
(26150EP150112)
100EH= 12 VDC/24 VDC ON/OFF electro-hydraulic
(36150EH100112)

3.*- Working Options

3.1 Working Section
Body = Standard (31BS100100)
3.2 Output Plug
PT1 =G3/4 Top and Side output (32PT180100)
3.3 Circuits Options
CO =G1/8 Carry–Over Connector (33CO150100)

INLET COVER- PUMP SIDE

LH Inlet Valve Options

Type No: **SD**

Sectional Appearance

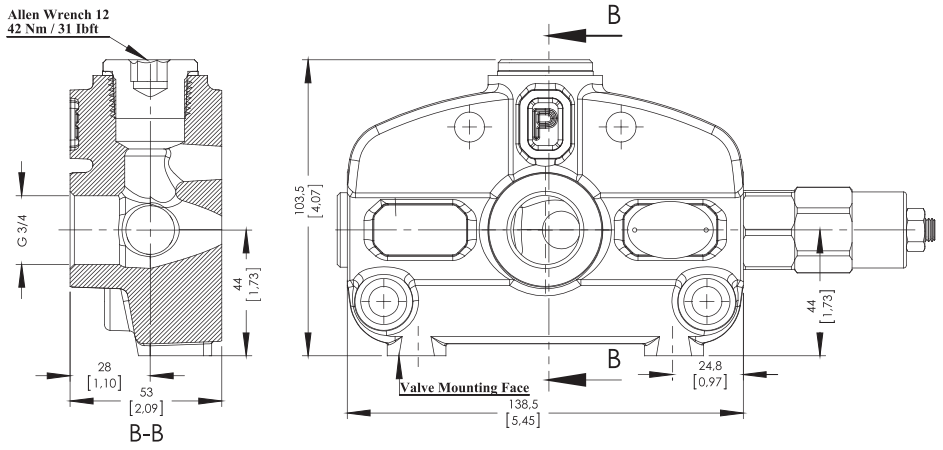

Type No: **TD**

Sectional Appearance

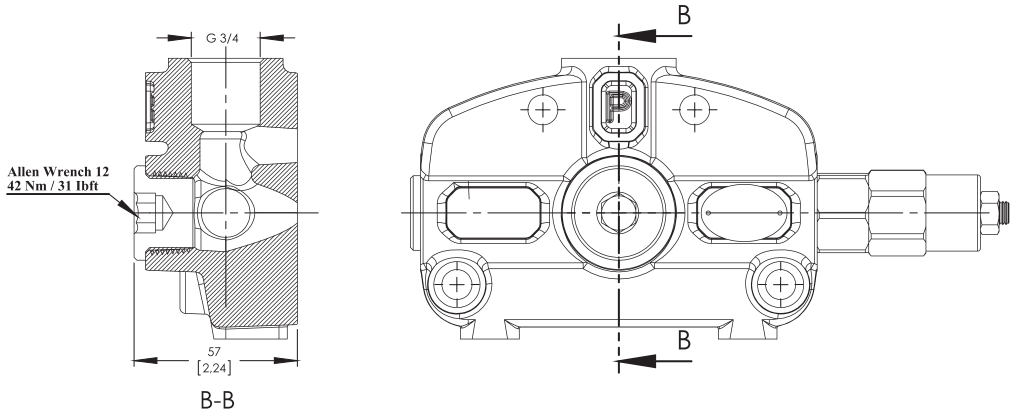

Hydraulic Diagram

Type No: **SD**

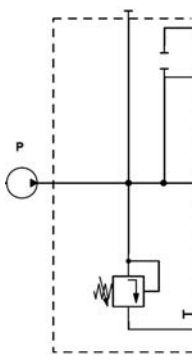

Type No: **TD**

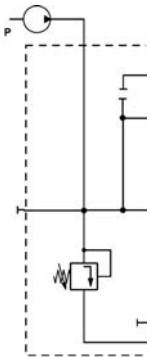

INLET COVER- PUMP SIDE

RH Inlet Valve Options

Type No: **RA**

Sectional Appearance

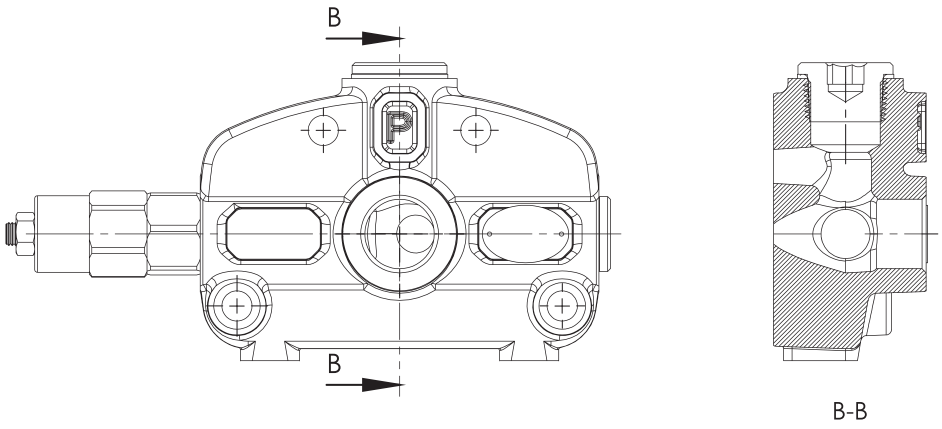

Type No: **RB**

Sectional Appearance

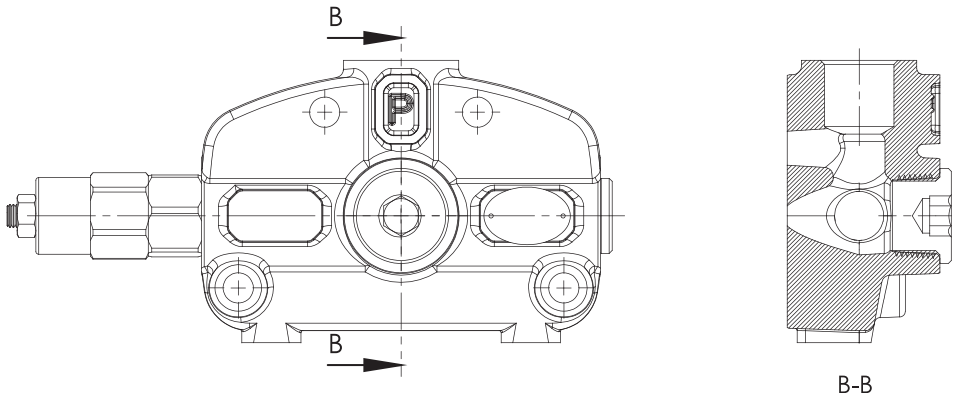

Hydraulic Diagram

Type No: **RA**

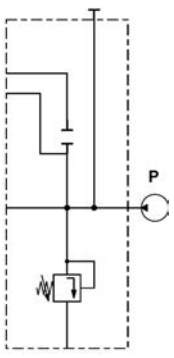

Type No: **RB**

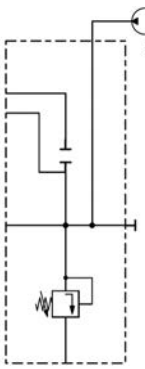

SPOOL OPTIONS

Spool Type - 1A

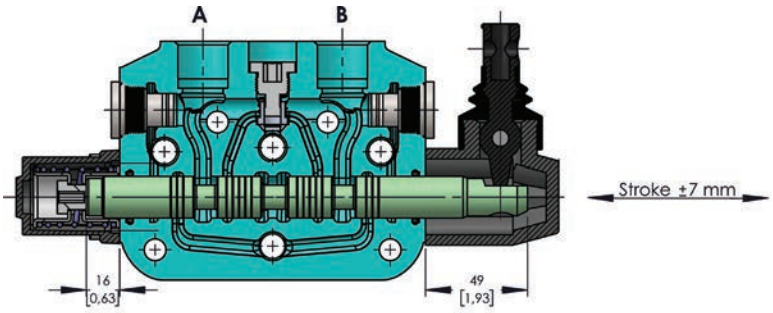

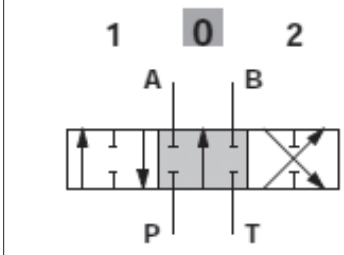

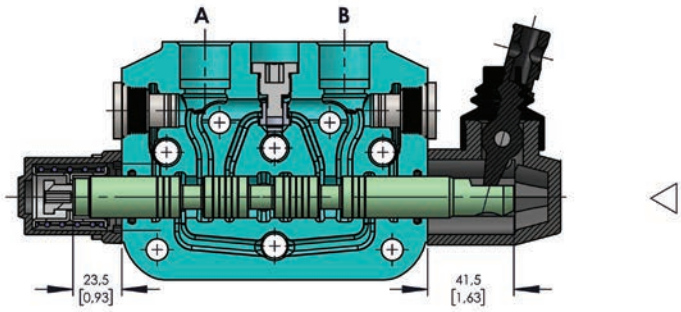

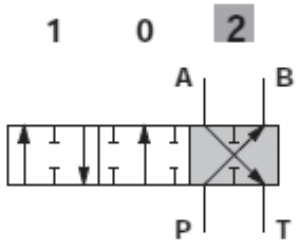

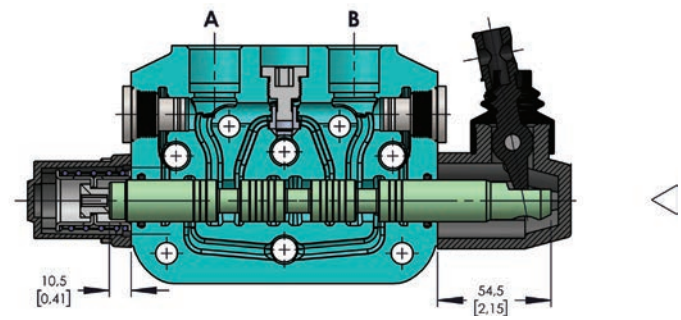

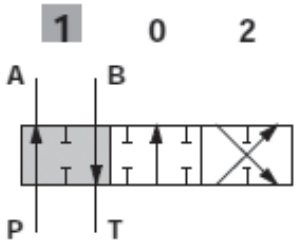

Performance Curve And Data

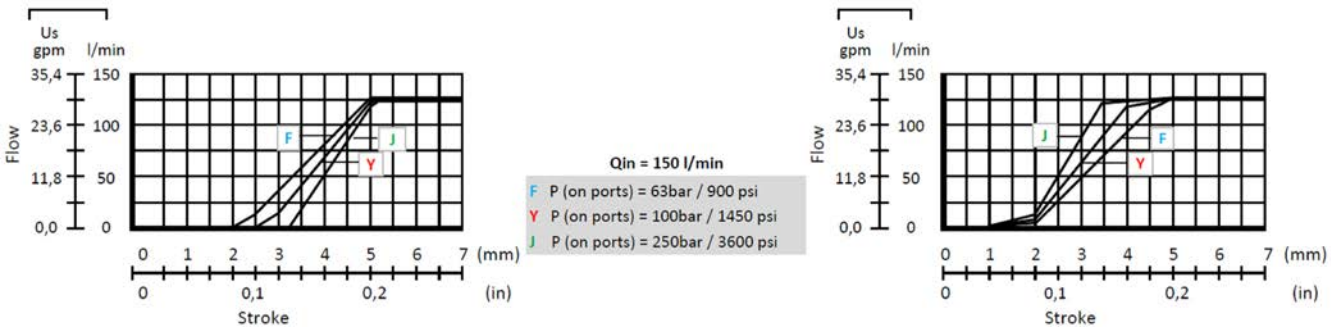

SPOOL OPTIONS

Spool Type - 2A

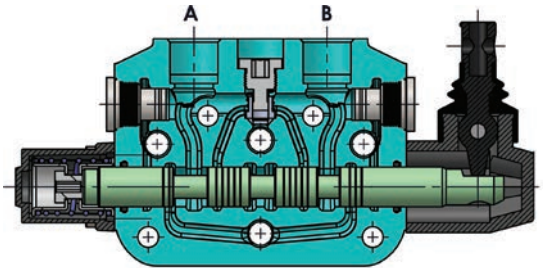

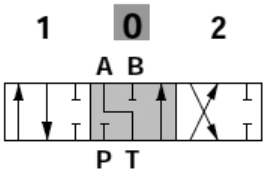

Spool Type - 3A

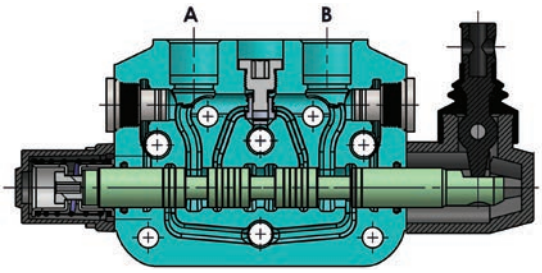

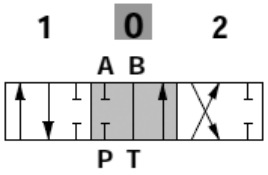

Spool Type - 4A

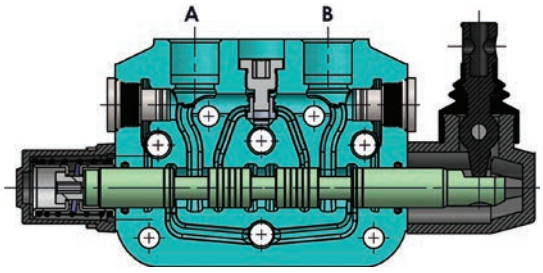

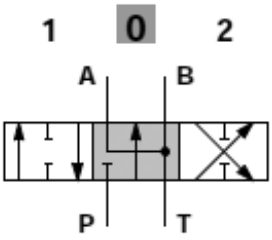

Spool Type - 5A

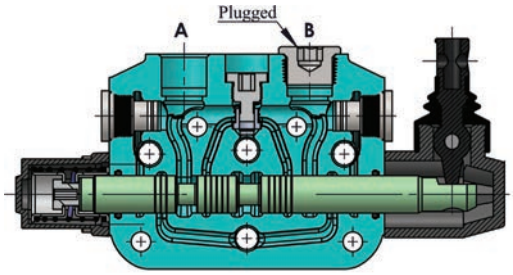

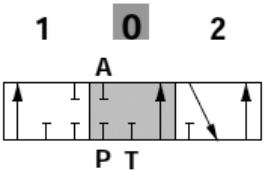

"B" port plugged

Spool Type - 6A

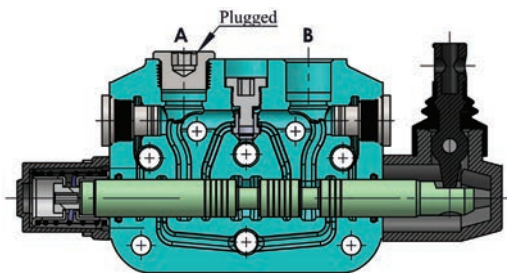

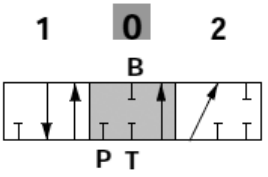

"A" port plugged

SPOOL POSITIONERS – SIDE OF RETURN

With Spring Return in Neutral Position

Kit No: **SR**

Sectional Appearance

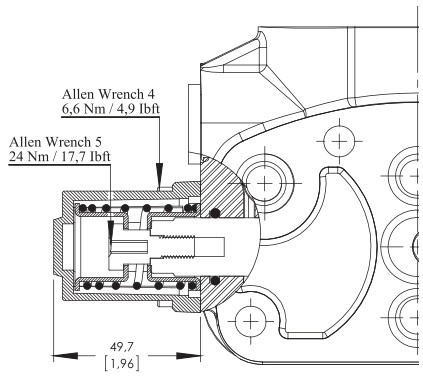

Diagram



With Detent

Kit No: **D**

Sectional Appearance

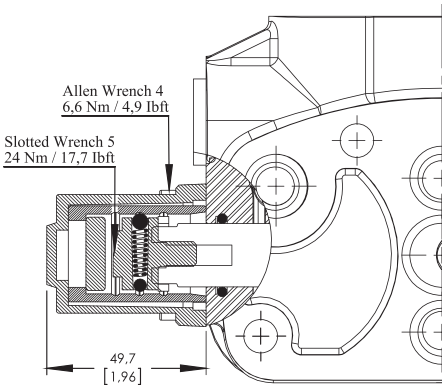

Diagram

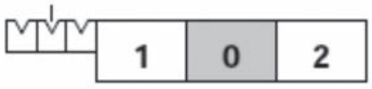

Force - stroke diagram

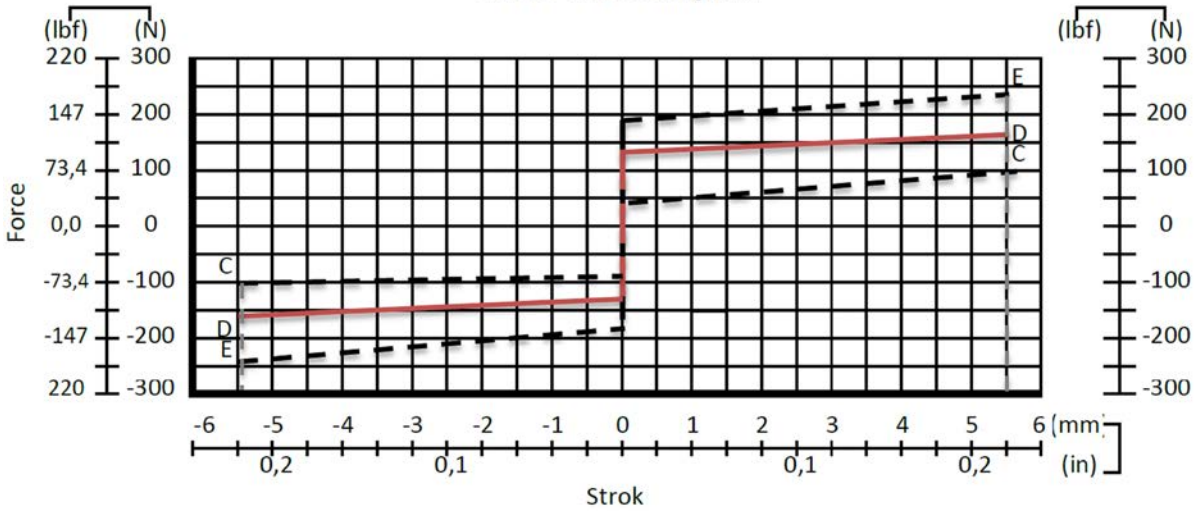

SPOOL POSITIONERS – SIDE OF RETURN

ON/OFF Pneumatic Control

Kit No: **100P**

Sectional Appearance

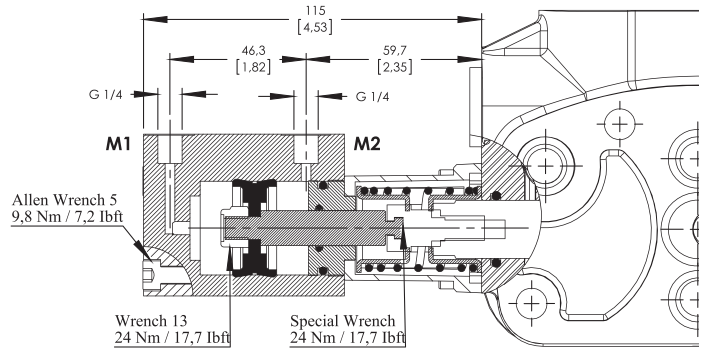

Diagram

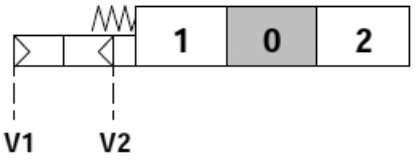

Operating Features

Pilot Pressure .....: 6 Bar (Max. 10) / 87 Psi (Max. 145)

ON/OFF Electro-Pneumatic Control

Kit No: **100EP**

Sectional Appearance

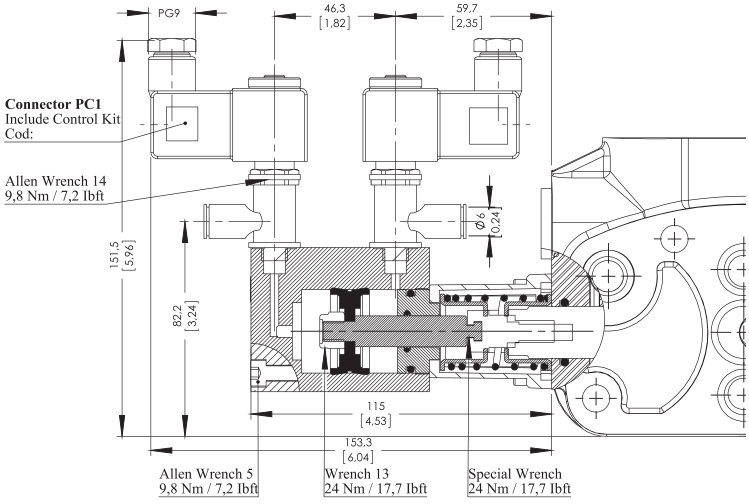

Diagram

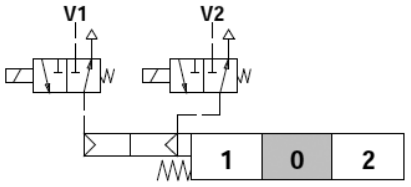

Operating Features

Pilot Pressure .....: 6 Bar (Max. 10) / 87 Psi (Max. 145)

Selenoid Operating Features

Nominal Voltage.....: 12VDC / 24 VDC

Power Rating.....: 6 W

SPOOL POSITIONERS – SIDE OF RETURN

ON/OFF Electro - Hydraulic Control

Kit No: **100EH**

Sectional Appearance

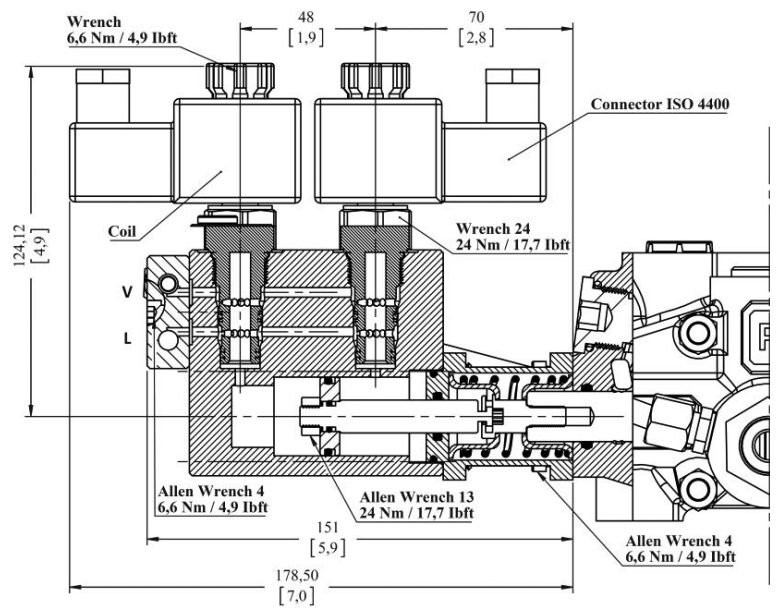

Diagram

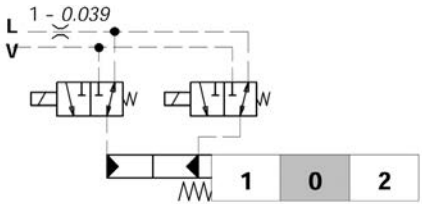

Operating Features

Pilot Pressure .....: 10 Bar / 145 Psi
: 50 Bar / 725 Psi
Max back pressure on drain L....:25 Bar / 360 Psi

Selenoid Operating Features

Coil Connection.....: ISO 4400
Nominal voltage.....: 12 VDC / 24 VDC
Power rating.....: 21 W
Duty cycle.....: %100
Protection type.....: IP 65
Nominal voltage tolerance.....: ±10
Max temperatures.....: 100 C°
Stroke.....: ±5,5 mm

ORDER CODE

External Pilot Collector
COL 11 - 10COL1001 – Kit For Section 1
COL 12 - 10COL1001 – Kit For Section 2
COL 13 - 10COL1001 – Kit For Section 3
COL 14 - 10COL1001 – Kit For Section 4
COL 15 - 10COL1001 – Kit For Section 5
COL 16 - 10COL1001 – Kit For Section 6
COL 17 - 10COL1001 – Kit For Section 7
COL 18 - 10COL1001 – Kit For Section 8

Standard Pilot Collector
COL 21 - 10COL2001 – Kit For Section 1
COL 22 - 10COL2001 – Kit For Section 2
COL 23 - 10COL2001 – Kit For Section 3
COL 24 - 10COL2001 – Kit For Section 4
COL 25 - 10COL2001 – Kit For Section 5
COL 26 - 10COL2001 – Kit For Section 6
COL 27 - 10COL2001 – Kit For Section 7
COL 28 - 10COL2001 – Kit For Section 8

SPOOL POSITIONERS – SIDE OF RETURN

ON/OFF Electro - Hydraulic Control Connections

Connection Type 1: **Collector kit for external pilot and drain**

Sectional Appearance

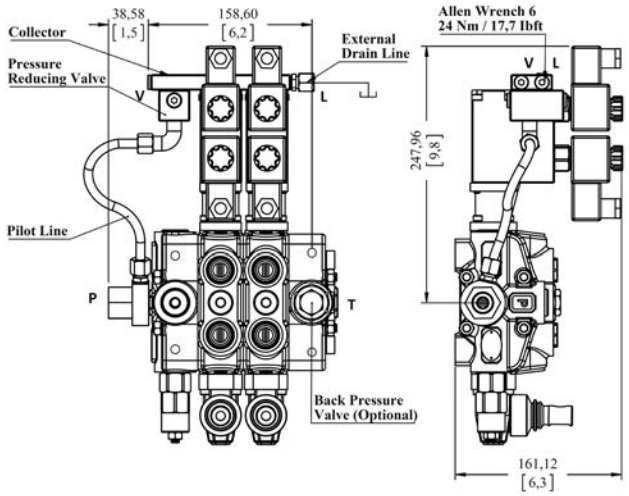

Diagram

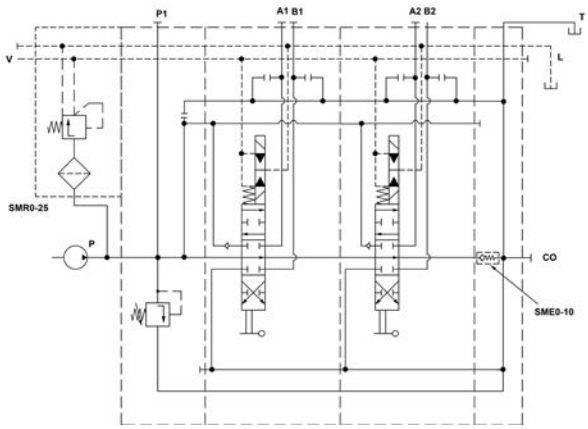

Operating Features
External Pressure Reducing Valve .....: 20 Bar / 290 Psi (For V line)
Code= ORV PD100-2P (SD(LA)-SMR2-125-PP)/P-1A-STL-100EH/ P-1A-STL-100EH (SMR0 -COL12-12V)/ SO-PT1 / SGT

Connection Type 2: **Collector kit with pilot and drain lines**

Sectional Appearance

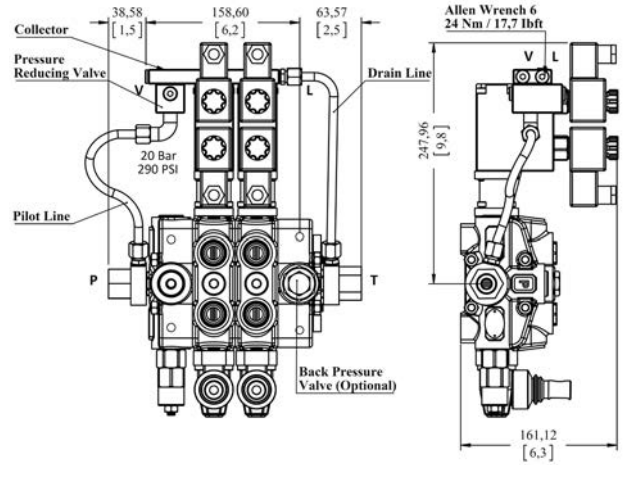

Diagram

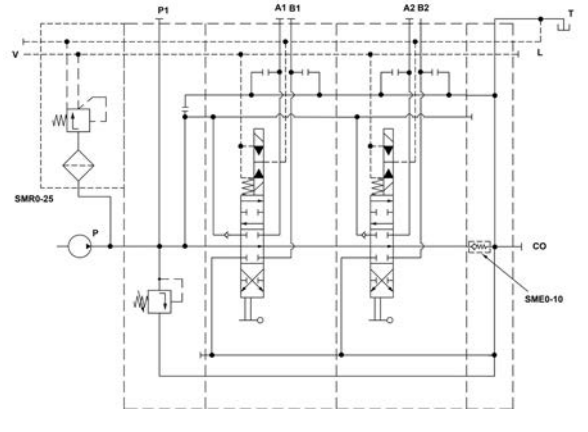

SMR 0-25 Valve Operating Features (Pressure reducing valve)
Outlet Pressure .....: 20 Bar / 290 Psi
Max. Flow.....: 8 l/min
Filtering .....:80 µ
Code= ORV PD100-2P (SD(LA)-SMR2-125-PP)/P-1A-STL-100EH/ P-1A-STL-100EH (SMR0 –COL22-12V)/ SO-PT1 / SGT

WORKING SECTION KIT

With Port Valves Type

Kit No: **AA**

Sectional Appearance

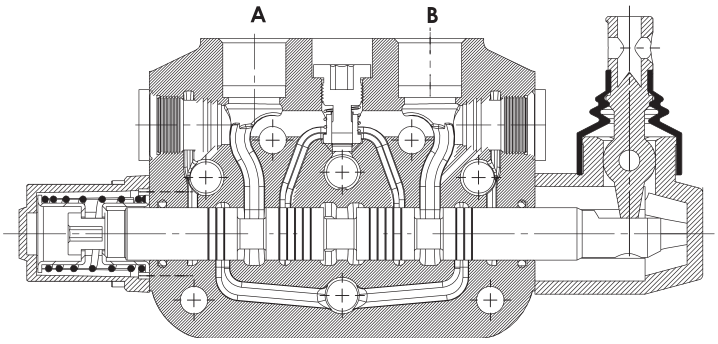

Diagram

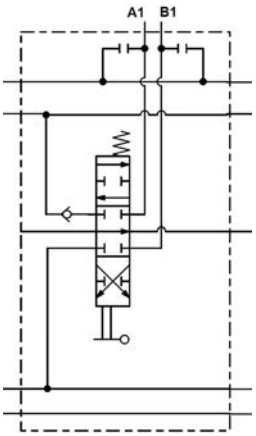

SPOOL POSITIONERS – SIDE OF LEVER CONTROL

Lever Controls

Kit No: **STL - L0**

Sectional Appearance

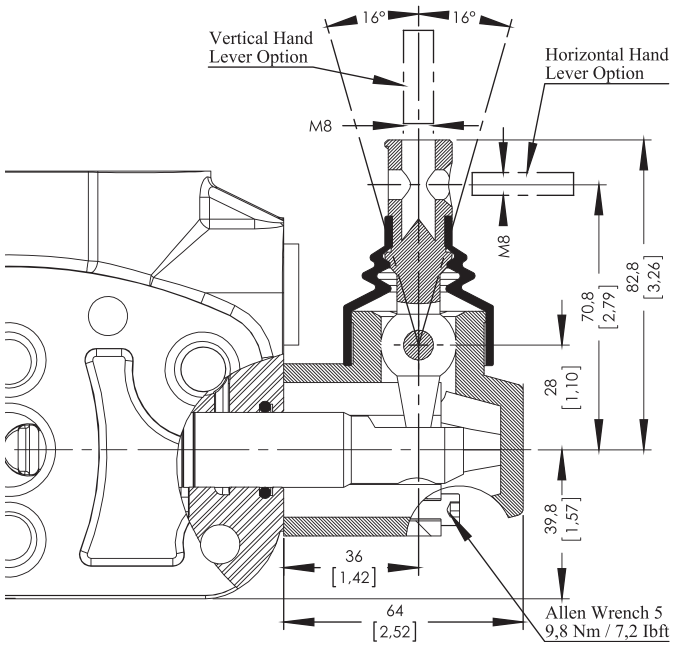

Diagram

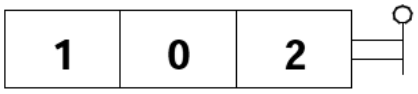

Kit No: **STL - L180**

Sectional Appearance

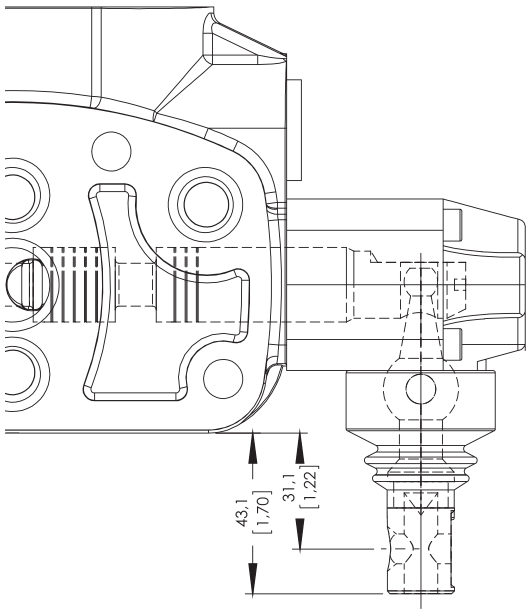

Diagram

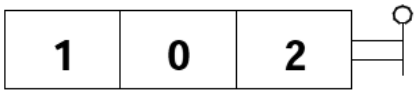

Note: Arm lever pivot box is aluminium cap protected. And it can be rotated 180º.

SPOOL POSITIONERS – SIDE OF LEVER CONTROL

Lever Controls - Joystick

Kit No: **JL**

Exploded View | Diagram

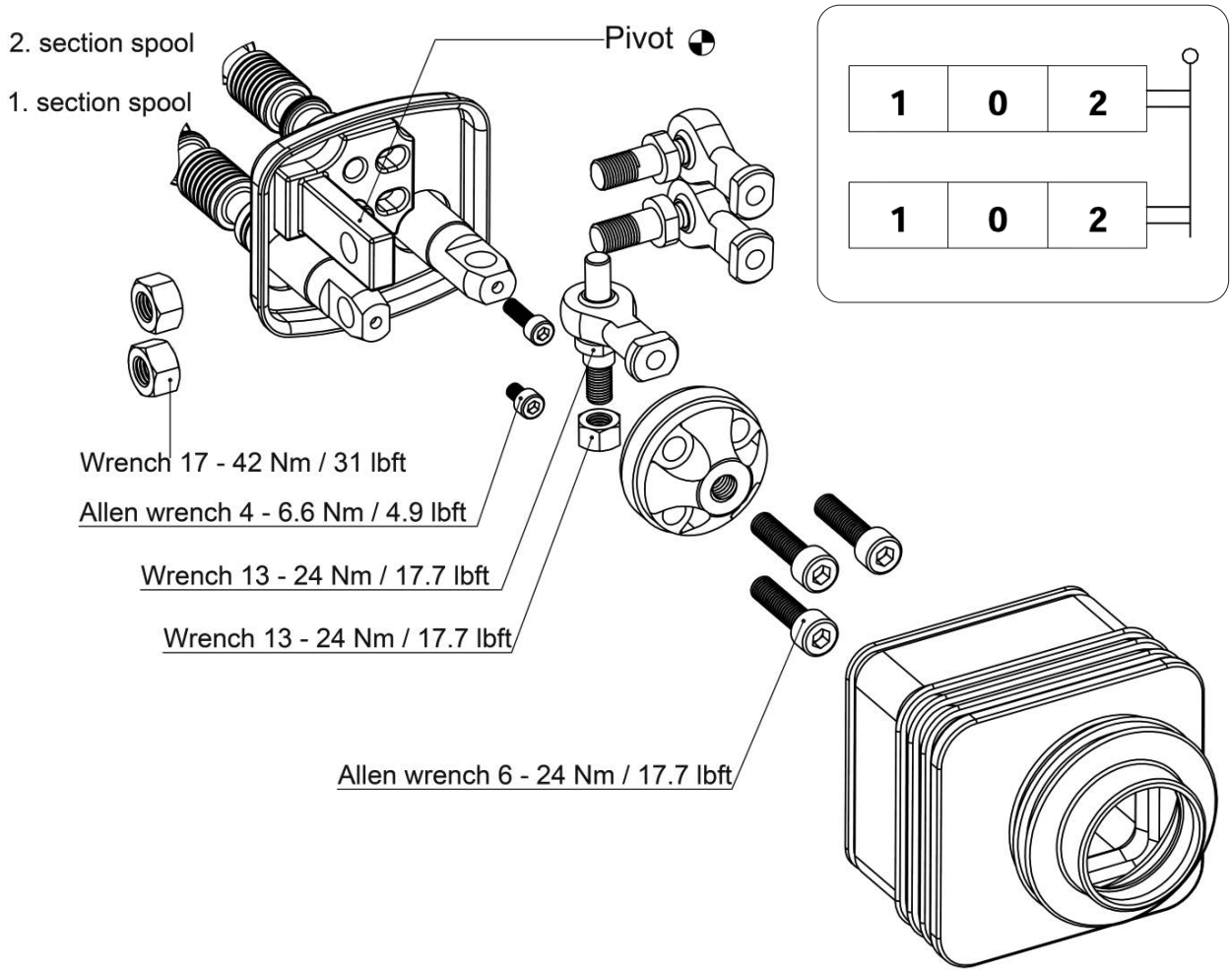

Operation Angle:

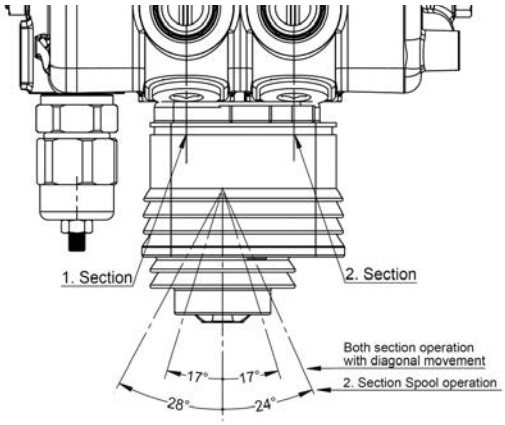

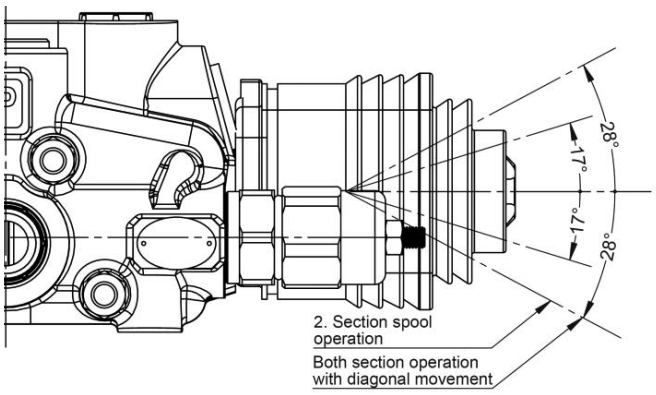

SPOOL POSITIONERS – SIDE OF LEVER CONTROL

Lever Controls - Joystick

Dimensions and movement sceme

Type No: **JL1** — **Application:** Pivot placed down on the Left

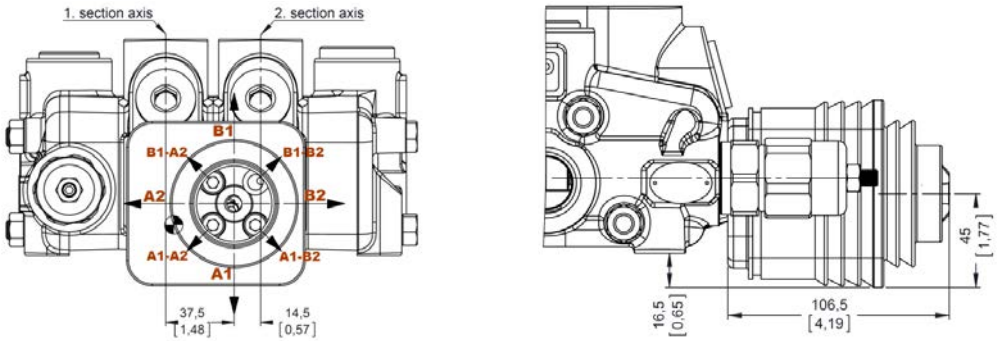

Type No: **JL2** — **Application:** Pivot placed down on the right

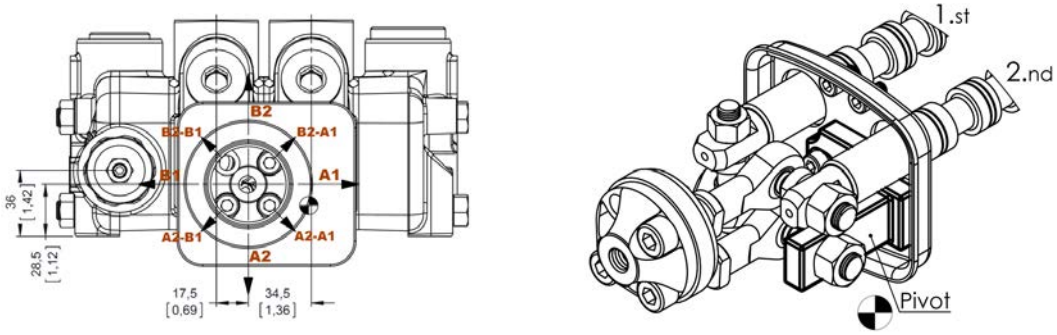

Type No: **JL3** — **Application:** Pivot placed above on the Left

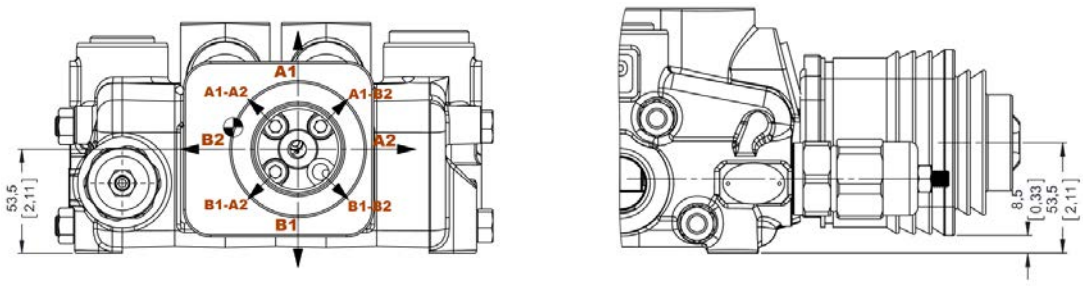

Type No: **JL4** — **Application:** Pivot placed above on the right

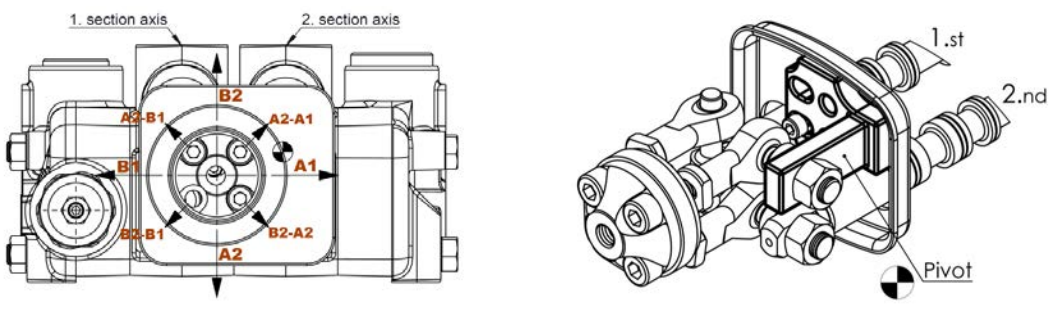

SPOOL POSITIONERS – SIDE OF LEVER CONTROL

Lever Controls - Cable Control

Kit No: **HL**

Sectional Appearance | Diagram

Waterproof cap prearranged for remote control with flexible cable.

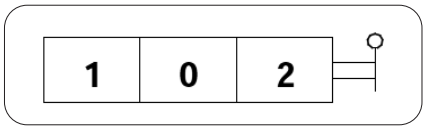

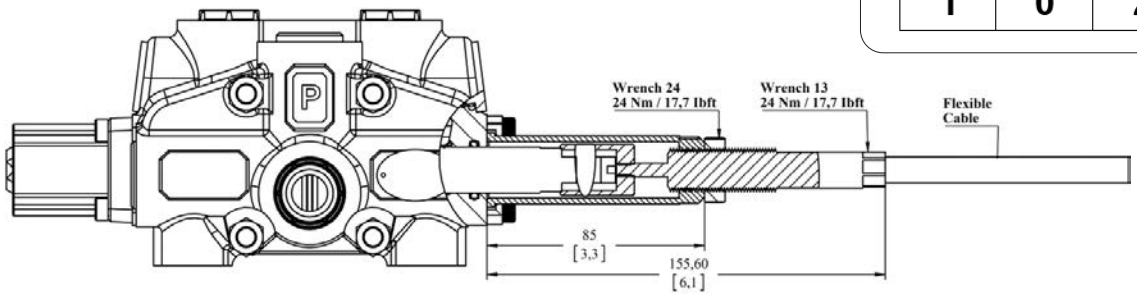

Note: Remote cable control is several options. Please indicte the cable length demanded and contact our sales department.

Example Operation

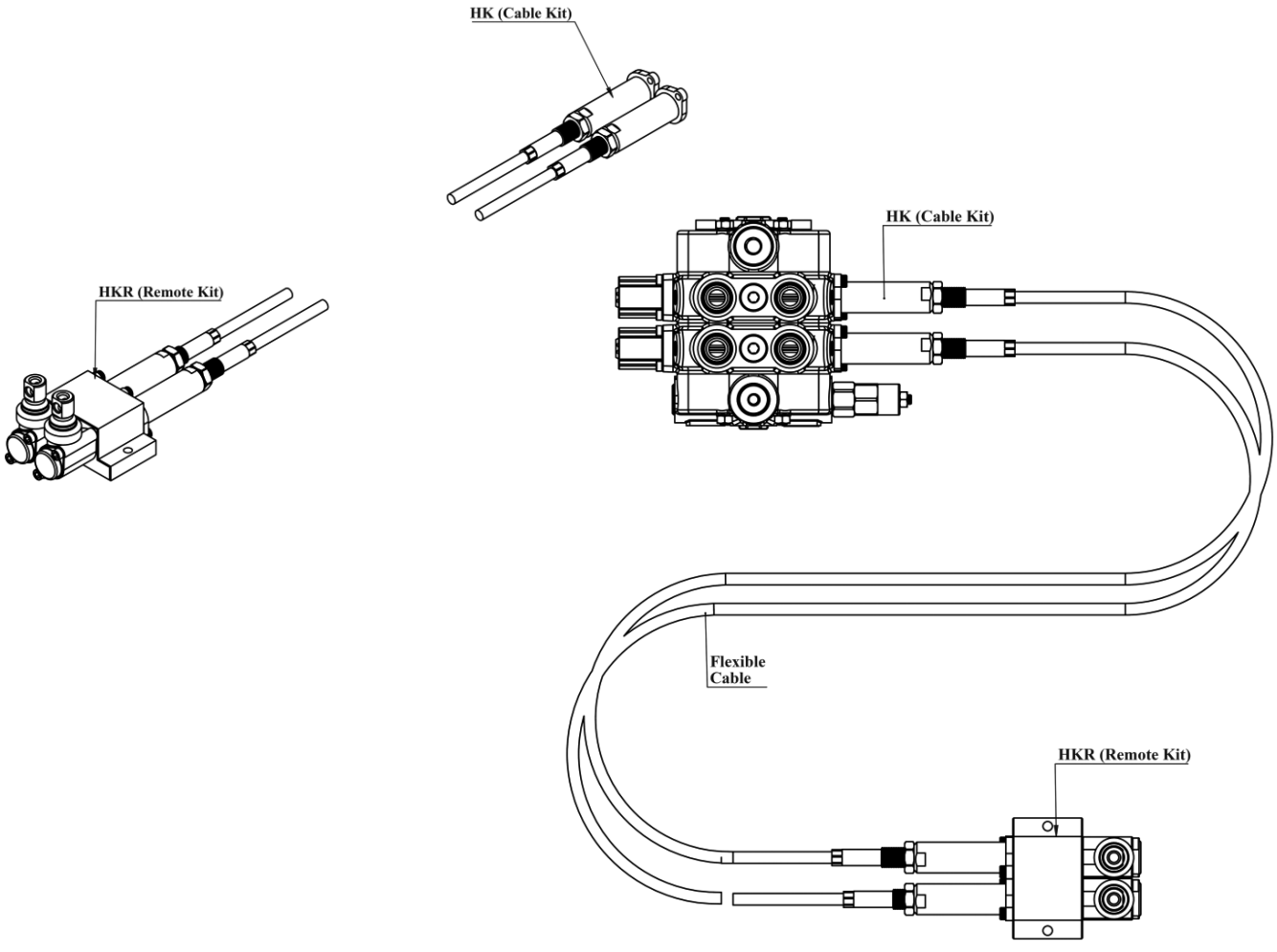

OUTLET COVER - TANK SIDE

Output Cover Options

Kit No: **SO**

Sectional Appearance

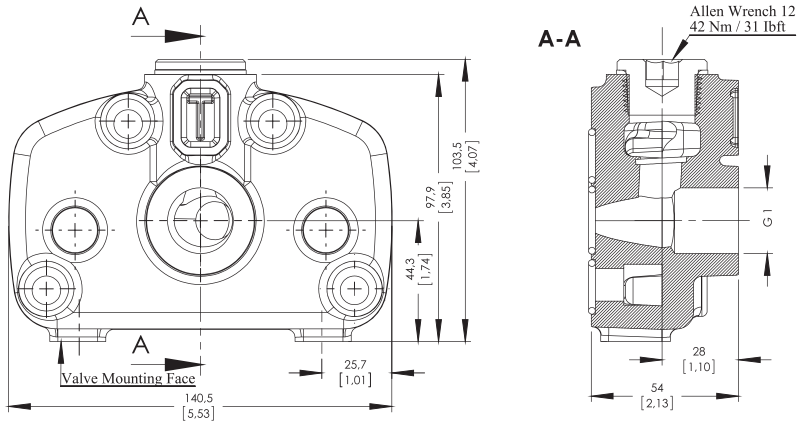

Type No: **TO**

Sectional Appearance

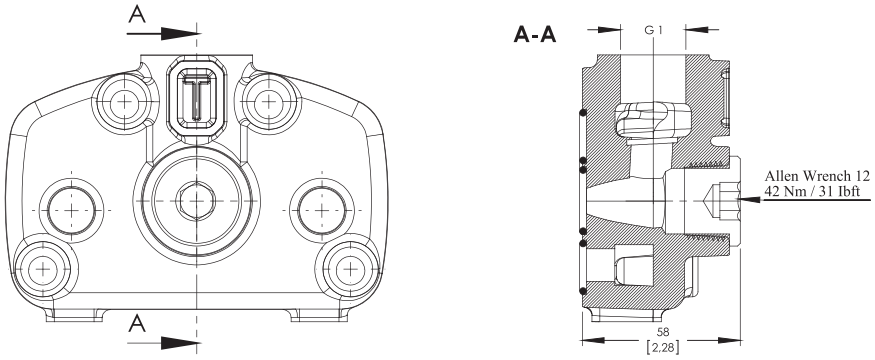

Hydraulic Diagram

Type No: **SO**

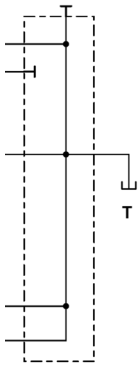

Type No: **TO**

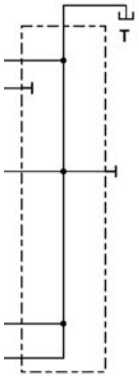

OUTLET COVER - TANK SIDE

Output Cover Options

Kit No: **TCO**

Sectional Appearance

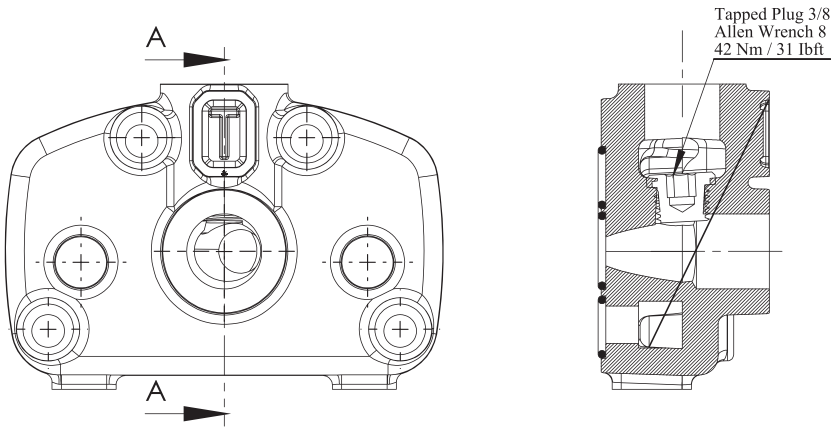

Kit No: **TC**

Sectional Appearance

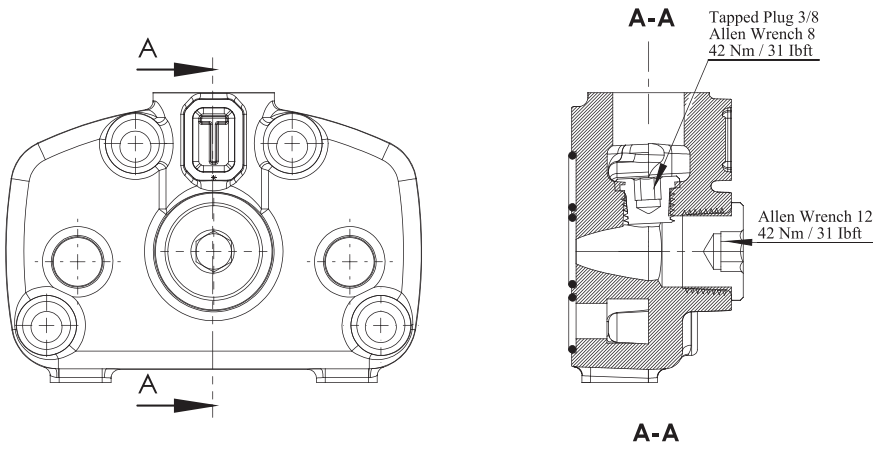

Hydraulic Diagram

Type No: **TCO**

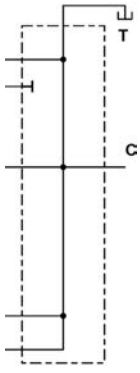

Type No: **TC**

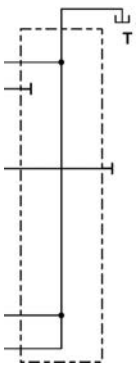

PORT VALVES OPTIONS

Anti Shock Valves

Code:

YAS-1 (T1-100)

- **Pressure Setting in Bar**
- **Adjusting type T=With screw , L=Valve Set / Spring Type (1,2,3)**
- **1 = Mounted Port A , 2 = Mounted Port B , 3 = Mounted Port A and B**

Hydraulic Diagram

Kit No: **YAS1**

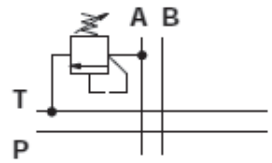

Kit No: **YAS2**

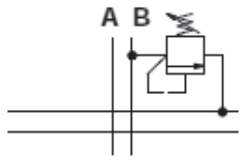

Kit No: **YAS3**

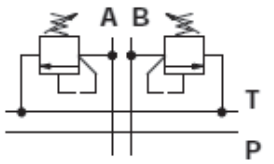

Adjustment Type on Valve:

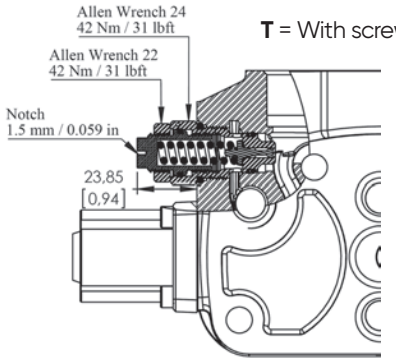

T = With screw

L = Valve set

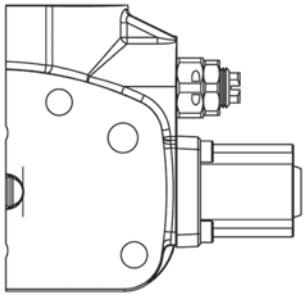

Performance Data:

Spring No=1 , Setting 50 bar / 725 psi

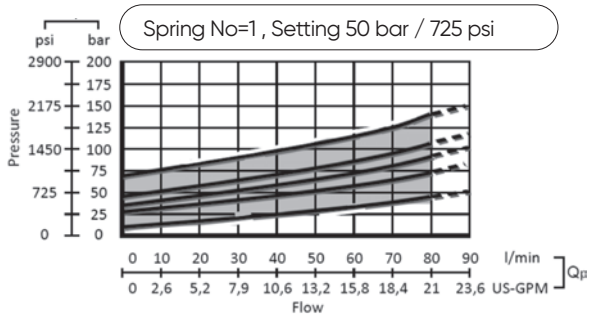

Spring No=2 , Setting 100 bar / 1450 psi

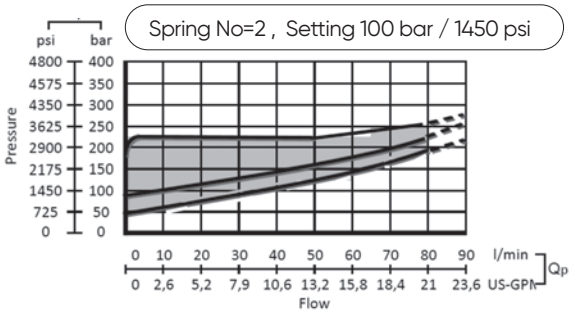

Spring No=3 , Setting 200 bar / 2900 psi

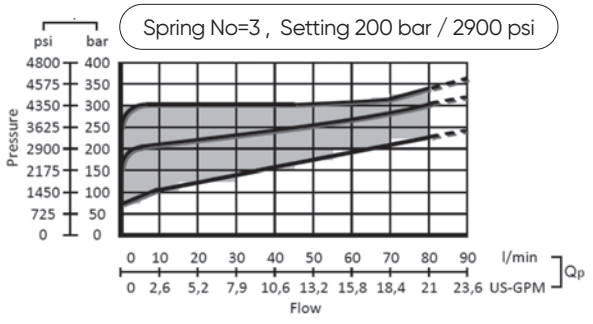

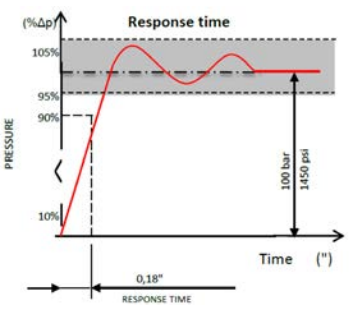

PORT VALVES OPTIONS

Anti shock And Anti Cavitation Valves

Code:

YAA-1 (T1-100)

- **Pressure Setting in Bar**
- **Adjusting type T=With screw , L=Valve Set / Spring Type (1,2,3)**
- **1 = Mounted Port A , 2 = Mounted Port B , 3 = Mounted Port A and B**

Hydraulic Diagram

Kit No: **YAA1**

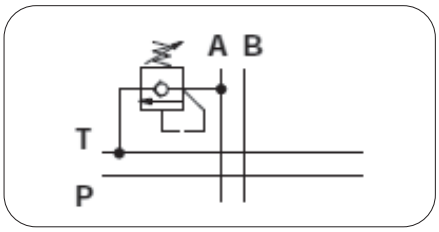

Kit No: **YAA2**

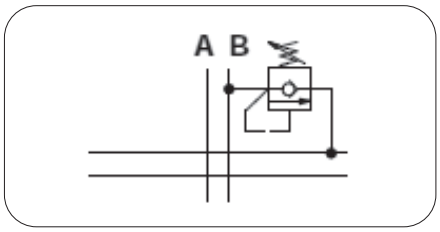

Kit No: **YAA3**

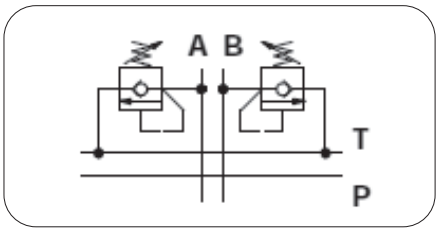

Adjustment Type on Valve:

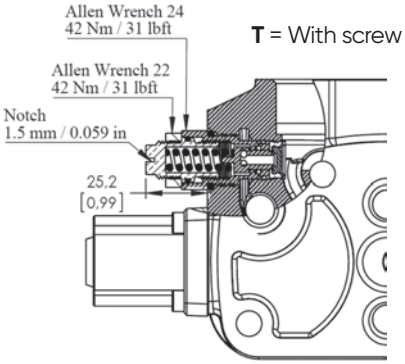

T = With screw

L = Valve set

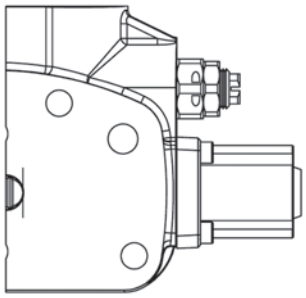

Performance Data:

Spring No=1 , Setting 63 bar / 900 psi

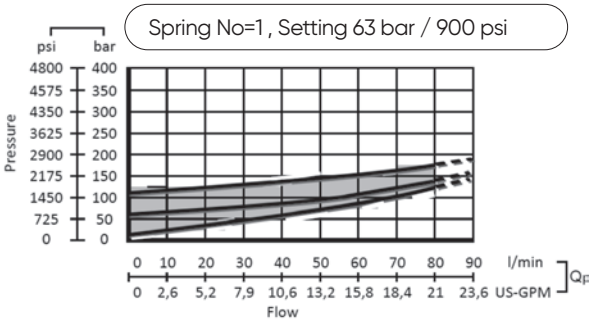

Spring No=2 , Setting 100 bar / 1450 psi

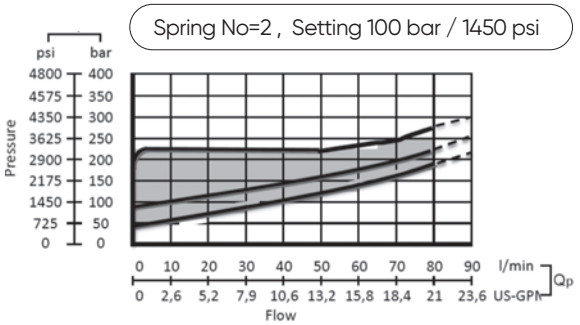

Spring No=3 , Setting 200 bar / 2900 psi

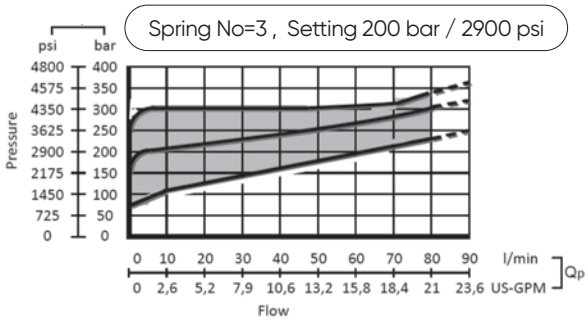

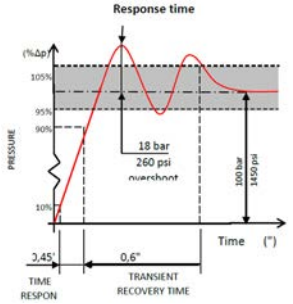

PORT VALVES OPTIONS

Anti Cavitation Valves

Code:

YAC-1 → **1 =** Mounted Port A , 2=Mounted Port B , 3=Mounted Port A and B

Hydraulic Diagram

Kit No: **YAC1**

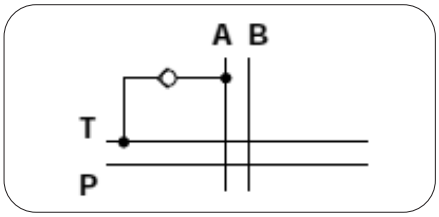

Kit No: **YAC2**

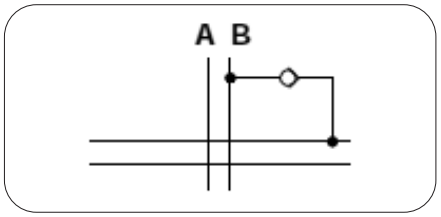

Kit No: **YAC3**

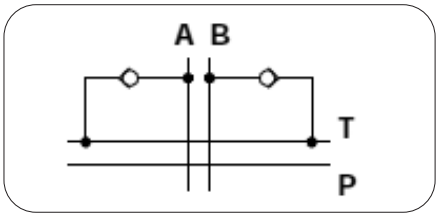

Adjustment Type on Valve And Data:

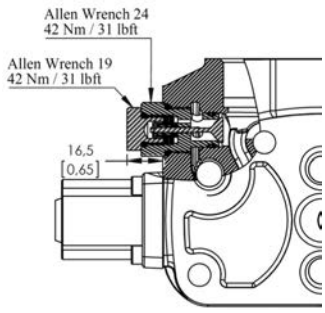

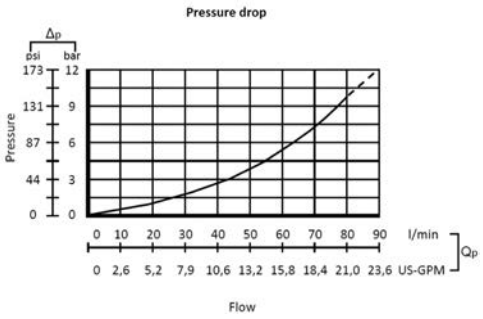

Valve Blaking

Plug with tank connection

DST-1 (1:Mounted port A – 2:Mounted port B)

Sectional Appearance

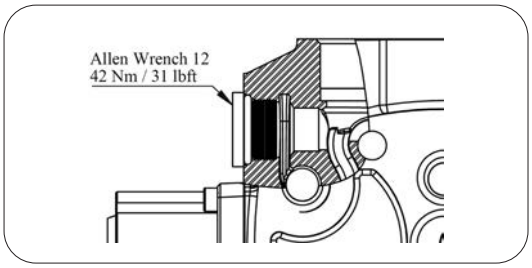

Hydraulic Diagram

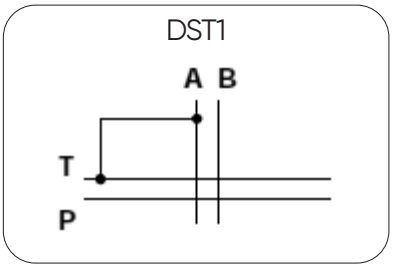

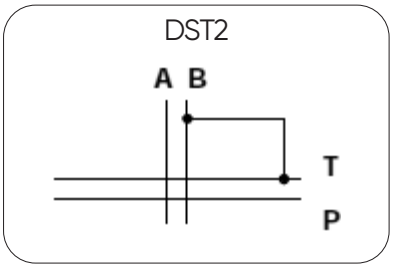

Plug

YP-1 (1:Mounted port A – 2:Mounted port B – 3:Mounted port A and B)

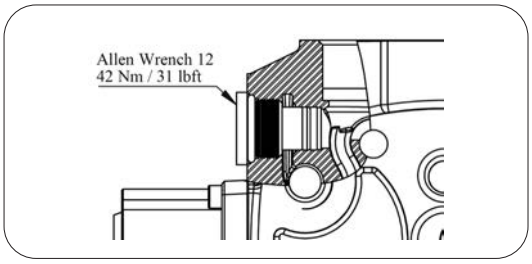

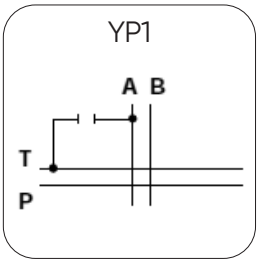

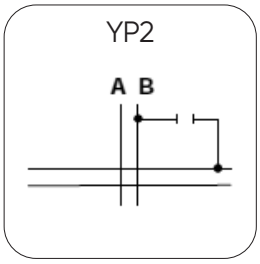

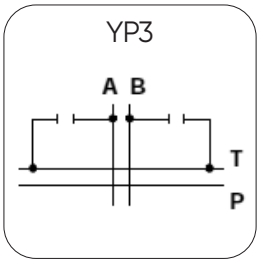

INSTALLATION AND MAINTENANCE

The ORV-PD100 valve is assembled and tested as per the technical specification of this catalog. Before the final installation on your equipment, follow the below recommendation:

• The valve can be assembled in any position, in order to prevent body deformation and spool sticking mount the product on a flat surface;

• In order to prevent the possibility of water entering the lever box and spool control kit, do not use high pressure wash down directly on the valve;

• Before painting, ensure plastic port plugs are tightly in place.

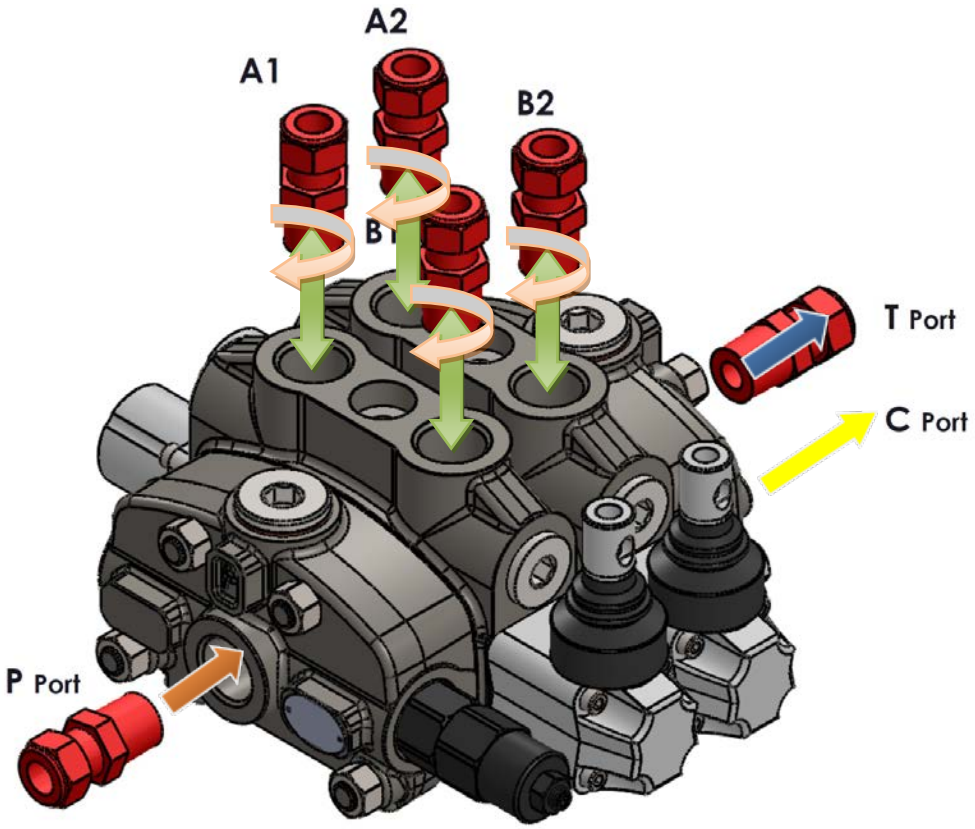

Threads Type (Nm / lbft)	P Port	A and B Port	T Port
BSP (ISO 228/1)	G 1/2	G 1/2	G 3/4
With O--Ring seal	50 / 36.9	50 / 36.9	70 / 51.6
With copper washer	60 / 44.3	60 / 44.3	70 / 51.6
With steel and rubber washer	60 / 44.3	60 / 44.3	70 / 51.6
BSP (ISO 228/1)	G 3/4	G 3/4	G 3/4
With O--Ring seal	70 / 51.6	70 / 51.6	70 / 51.6
With copper washer	70 / 51.6	70 / 51.6	70 / 51.6
With steel and rubber washer	70 / 51.6	70 / 51.6	70 / 51.6
UN--UNF (ISO 11926--1)	11/16--12 UNF--2B	7/8--14 UNF--2B	11/16--12 UNF--2B
With O--Ring seal	95 / 70	30 / 22.1	95 / 70

TECHNICAL DATA

Ports Dimensional Data

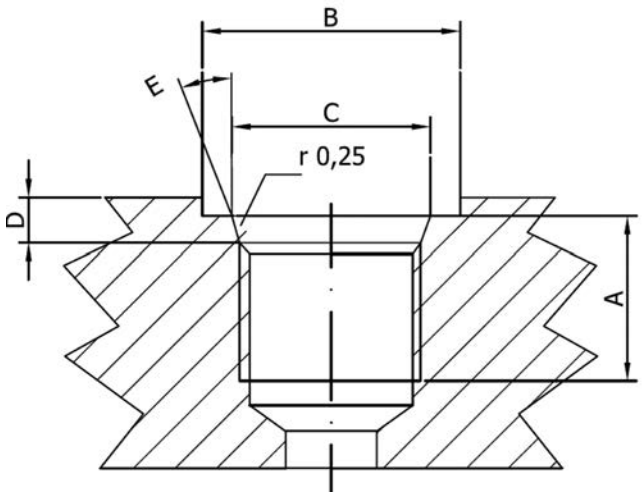

SAE UN-UNF (ISO 725)						
Dimensions		7/8-14 UNF SAE10		1"1/16-12 UN SAE12		1"5/16-12 UN SAE16	
mm	in						
A		17	0,67	20	0,79	20	0,79
B		34	1,34	41	1,61	49	1,92
C		23,9	0,94	29,2	1,15	35,5	1,40
D		2,5	0,10	3,3	0,13	3,3	0,13
E		15°		15°		15°	

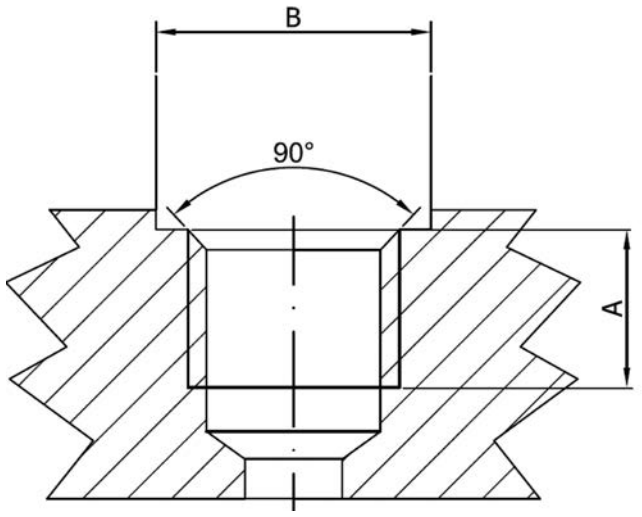

BSP (ISO 228)						
Dimensions		G 1/2"		G3/4		G1	
mm	in						
A		16	0,63	18	0,71	20	0,79
B		27	1,06	33	1,30	40	1,57

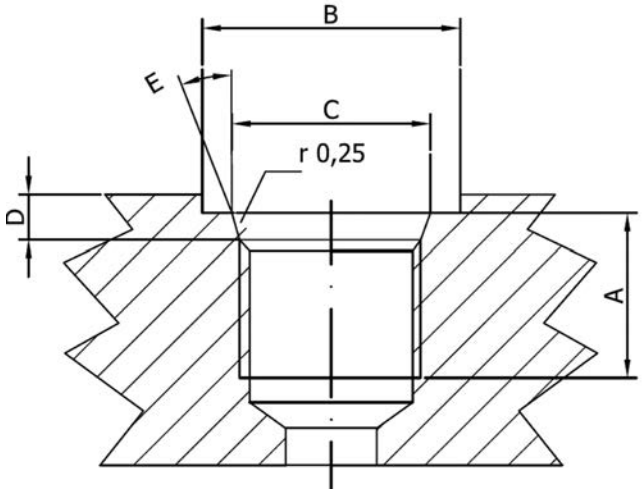

METRIC (ISO 262)					
Dimensions		M22x1,5 ISO 262		M27x2 ISO 262	
mm	in				
A		16	0,63	18	0,71
B		31,5	1,24	37,7	1,48

ORVAL HYDRAULIC

ORV PD100



ORVAL HYDRAULIC

SECTIONAL
VALVES

ORV-PD120



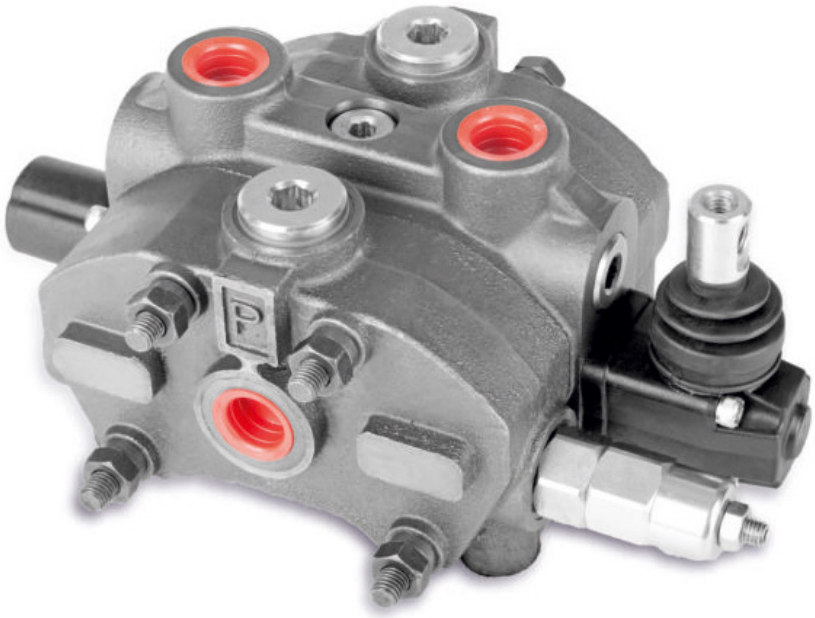

CONTENTS

Working Conditions	3
Dimensional Data	3
Hydraulic Circuit	3
Performance Data And Curve	3
Inlet Relief Options	3
Ordering Codes	3
Inlet Cover- Pump Side	3
Spool Options	3
Spool Positioners – Side of Return	3
Working Section Kit	3
Spool Positioners – Side of Lever Control	3
Spool Positioners – Side of Lever Control	3
Spool Positioners – Side of Lever Control	3
Spool Positioners – Side of Lever Control	3
Outlet Cover- Tank Side	3
Port Valves Options	3
Installation and Maintenance	3
Technical Data	3

Additional Informations

Note: This catalog shows the product in the most standard configurations. For Other Configurations, more detailed information or special request, Please contact Customer Service Dpt.

Warning!: All specifications of this catalog refer to the standard product at this date (01/2020). ORVAL, oriented to a continuous improvement, reserves the right to discontinue, modify or revise the specifications, without notice.

ORVAL IS NOT RESPONSIBLE FOR ANY DAMAGE CAUSED BY AN INCORRECT USE OF THE PRODUCT.

WORKING CONDITIONS

Nominal Flow Rating / Displacement	120 l/min	31 U.S.G.P.M
Maximum Working Pressure (Series Circuit)	210 Bar	3050 PSI
Maximum Working Pressure (Parallel Circuit)	315 Bar	4600 PSI
Max. Back Pressure	25 Bar	360 PSI
Oil Temperature with NBR Seals	-20 to 80 C°	-4 to 176 F °
with FPM (Viton) Seals	-20 to 100 C°	-4 to 212 F °
Oil Viscosity – Operating Range	From 15 to 75 mm2/s	From 15 to 75 cSt
Minumum / Maximum	12 / 400 mm2/s	12 / 400 cSt
Oil Filtration	≤30 µ	
Ambiant Temperature Range	-35 to 60 C°	-31 to 140 F °
Number Of Spools	1 to 12	
Internal Leakage (at 100 bar (1450 PSI), 40C° (110 F°), 46 cSt – A(B)–T)	4 cm3/min	0,24 in3/min
Max. Level Of Contamination	19/16 - ISO 4406	
Tie rod tightening torque	40 Nm	30 lbft

Not: This catalogue shows technical specifications measured with mineral oil of 46 mm2/s-46 cSt viscosity at 40 C° temparture.

Features

• Simple, compact and heavy duty designed sectional valves from 1 to 12 sections for open and closed center hydraulic systems.
• Optionaly Carry-Over port only tandem circuit.
• Fitted with a main pressure relief valve.
• Interchangeable spool diametre is 20 mm – 0,79 in.
• Available manual, pneumatic, hydraulic and electro-pneumatic spool control kits.

DIMENSIONAL DATA

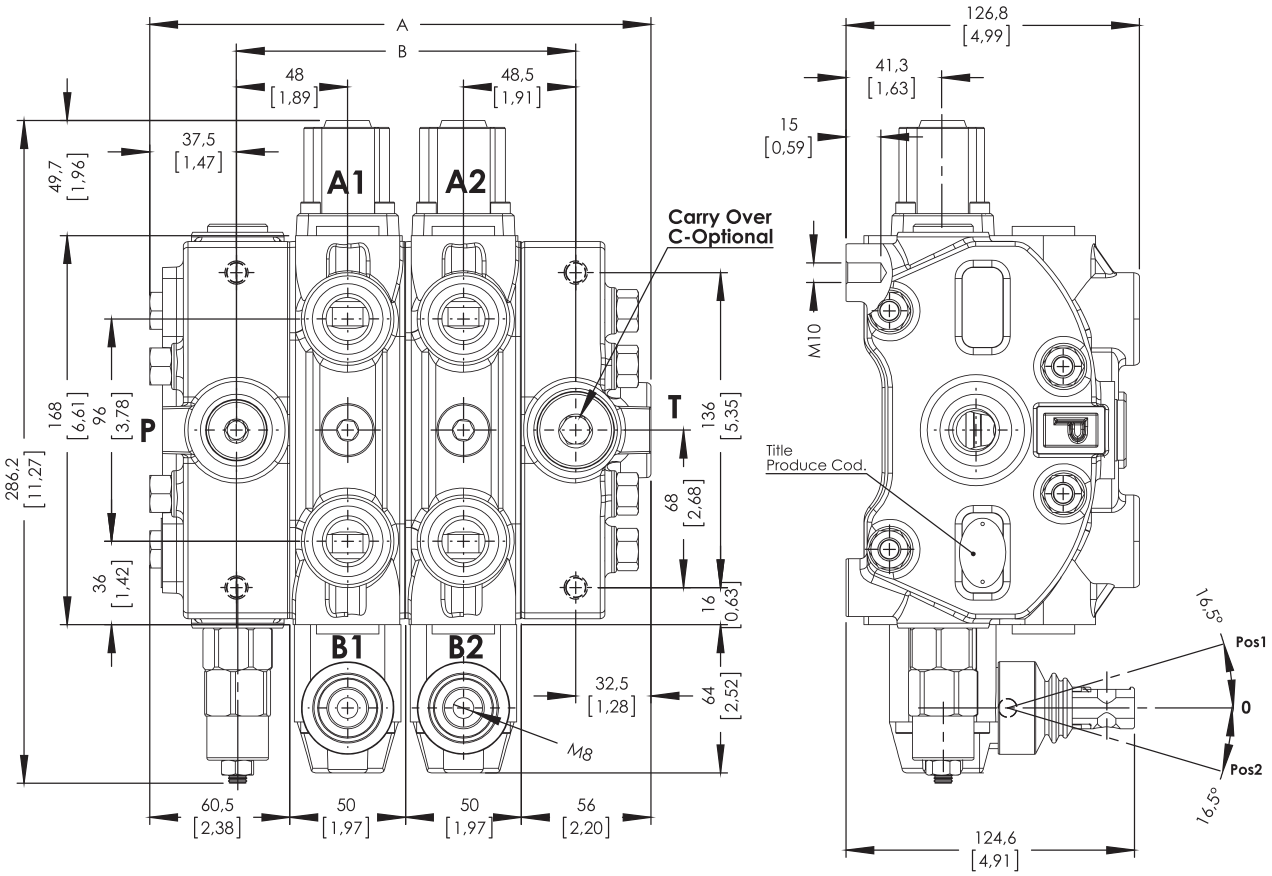

TYPE	A		B		Weight	
	mm	in	mm	in	Kg	lb
ORV- PD120-1P	216,5	8,52	146,5	5,77	13.70	29.67
ORV- PD120-2P	266,5	10,49	196,5	7,74	19.18	43.21
ORV- PD120-3P	316,5	12,46	246,5	9,71	24.70	56.75
ORV- PD120-4P	366.5	14,43	296,5	11,68	30.30	70.29
ORV- PD120-5P	416,5	16,40	346,5	13,65	35.82	83.83
ORV- PD120-6P	466.5	18,37	396,5	15,62	41.80	97.37
ORV- PD120-7P	516,5	20,34	446,5	17,59	46.97	110.91
ORV- PD120-8P	566.5	22,31	496,5	19,56	52.60	124.45
ORV- PD120-9P	616,5	24,28	546,5	21,53	58.00	137.99
ORV- PD120-10P	666.5	26,25	596,5	23,50	63.56	151.53
ORV- PD120-11P	716,5	28,22	646,5	24,57	69.00	165.07
ORV- PD120-12P	766.5	30,19	696,5	27,44	74.50	178.61

STANDARD THREADS

PORT	BSP (Iso 228) 1/2" Series	BSP (Iso 228) 3/4"Series	UN-UNF (Iso 11926-1)	Metric (Iso 262)
P Inlet	G 1/2	G 3/4	1 1/16-12 UN	M27x2
A-B Ports	G 1/2	G 3/4	7/8-14 UNF	M22x1.5
T Outlet	G 3/4	G 3/4	1 1/16-12 UN	M27x2
Pneumatic	G 1/4	G 1/4	NPTF 1/8 - 27	NPTF 1/8 - 27
Carry-Over	G 3/8	G 3/8	3/4-16 UNF	G 3/8

HYDRAULIC CIRCUIT

Parallel

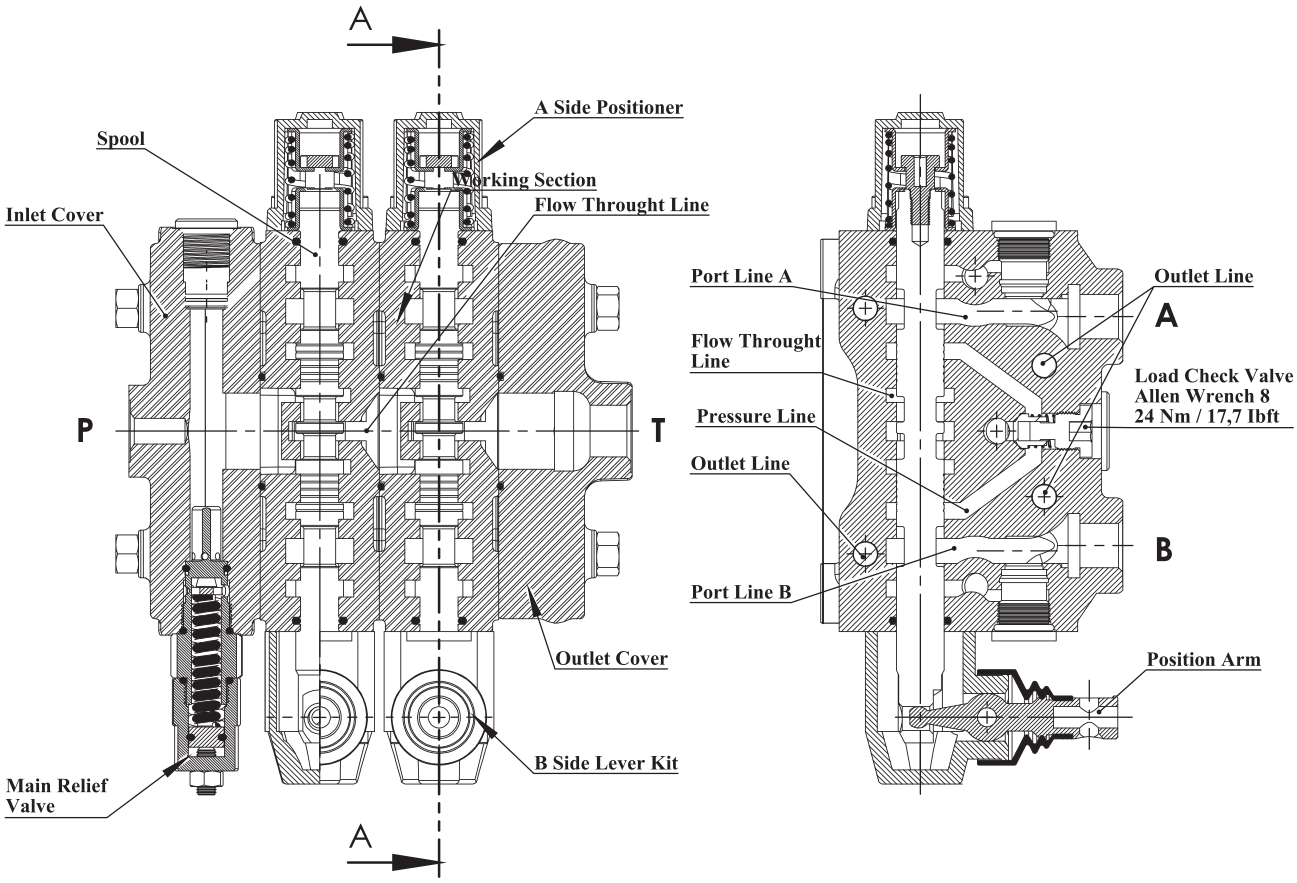

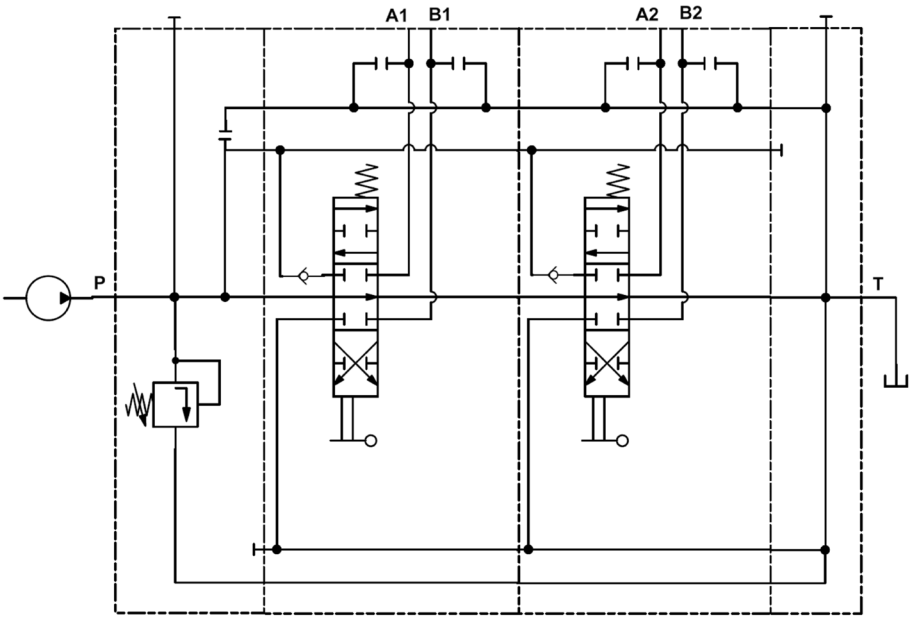

Code: ORV PD120-2P (SD(LA)-SMR2-125-PP)/P-1A-STL-SR/ P-1A-STL-SR/ SO-PT1 / SGT

HYDRAULIC CIRCUIT

Inlet Cover – Pump Side

SD - Side inlet with direct pressure relief valve
TD - Top inlet with direct pressure relief valve
SP - Side inlet with relief valve blanking plug

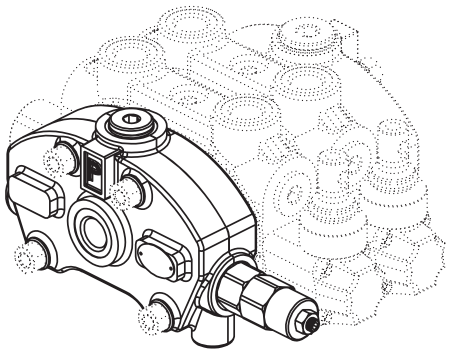

Type = SD

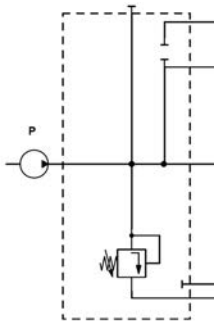

Type = TD

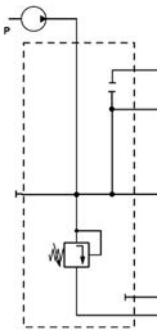

Type = SP

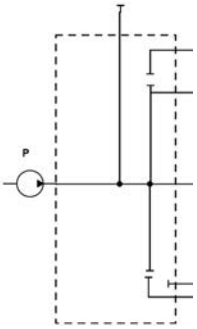

Working Sections

P – Parallel

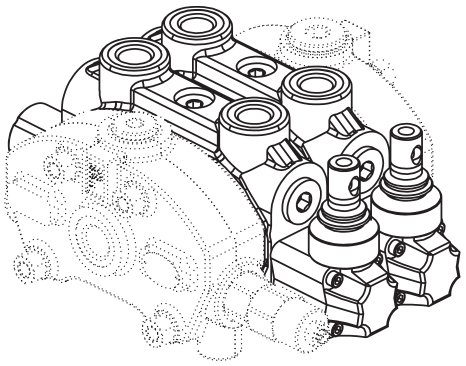

Type = P

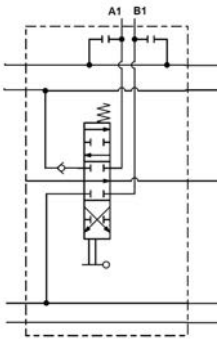

HYDRAULIC CIRCUIT

Outlet Cover (Tank Side)

SO - Side outlet
TO - Top outlet
TCO - Top outlet with carry-over
TC - Top outlet with closed centre

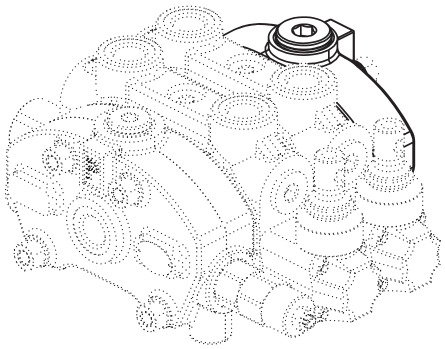

Type = SO

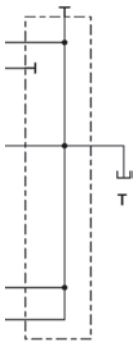

Type = TO



Type = TCO

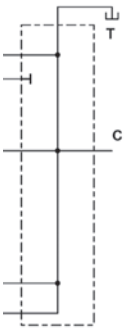

Type = TC

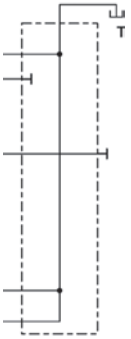

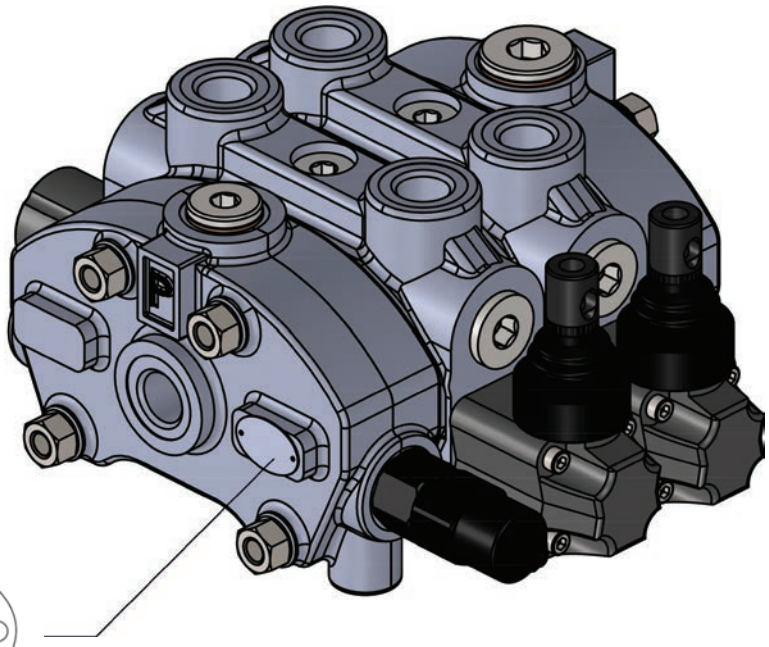

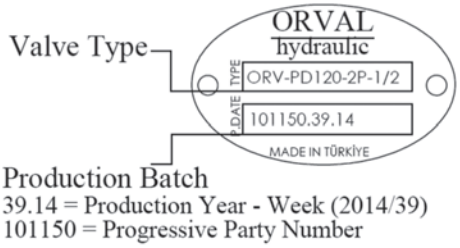

HYDRAULIC CIRCUIT

Standard Configurations With Top Inlet And Outlet Ports - RH (Right Inlet)

A symetrical body allows the reverse assembly of spool.

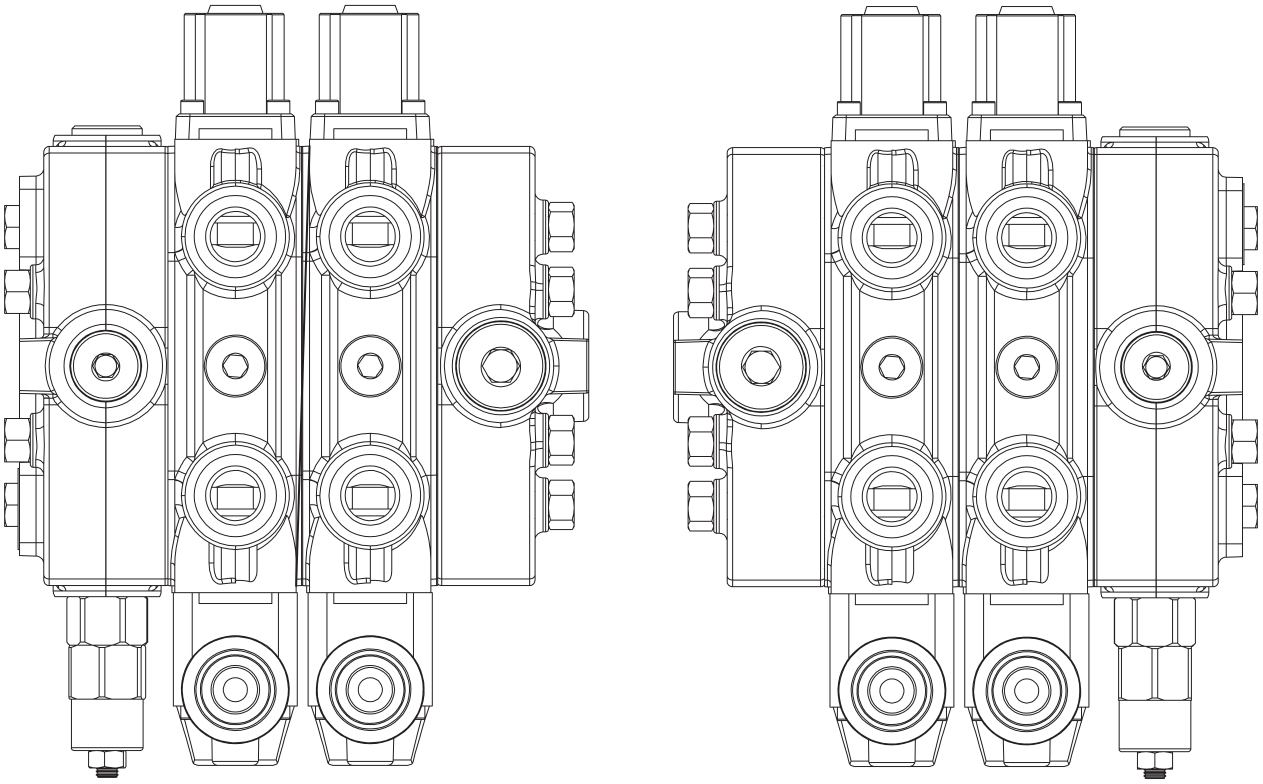

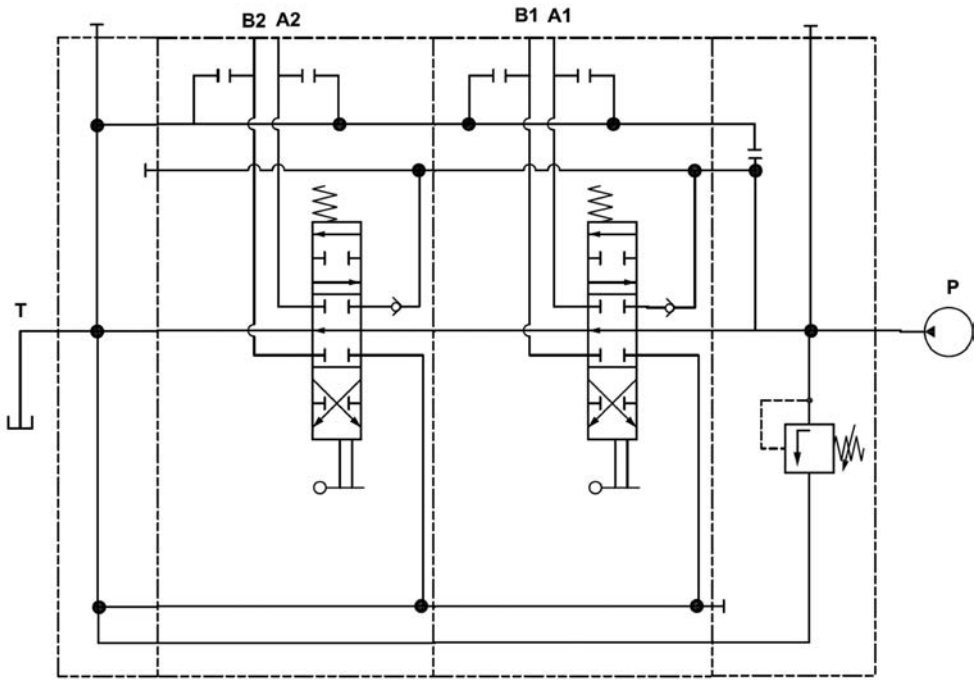

Code: ORV PD120-2P (SD(RA)-SMR2-125-PP)/P-1A-STL-SR/ P-1A-STL-SR/ SO-PT1 /

PERFORMANCE DATA AND CURVE

Open Center - Pressure Drop (P-T)

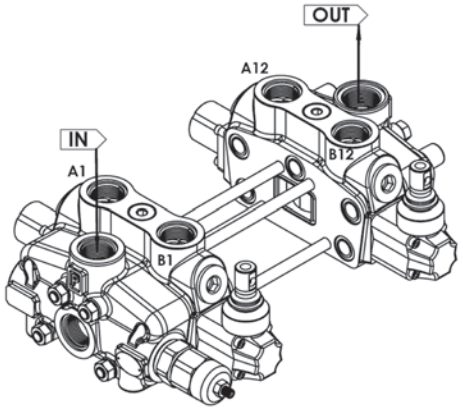

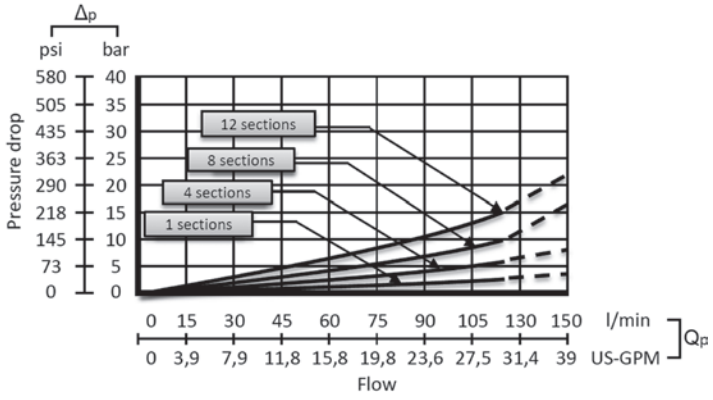

Inlet to Work Port - Pressure Drop (P-A/B)

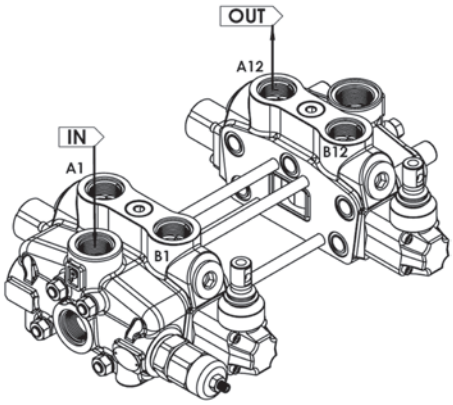

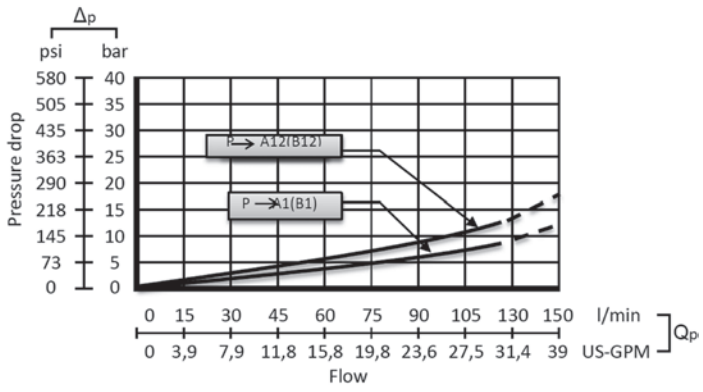

Work Port to Outlet - Pressure Drop (A/B-T)

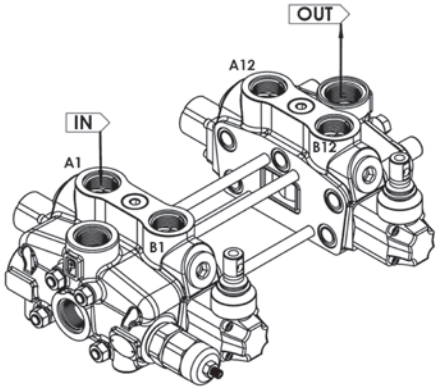

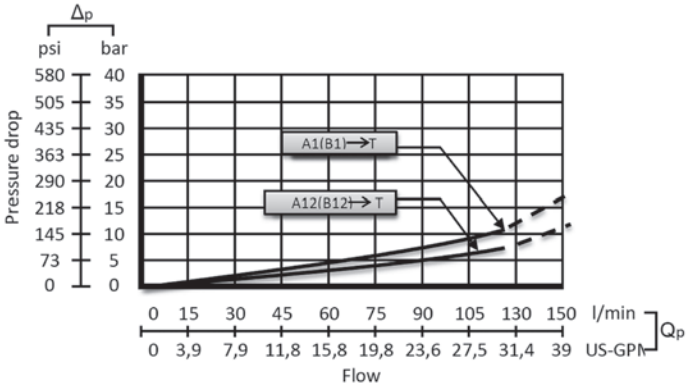

INLET RELIEF OPTIONS

Direct Pressure Relief Valve

Code:

SMR2 – 125

- **Pressure Setting Bar in (Standard 125 bar)**
- **Standard Main Relief Spring Type -2**

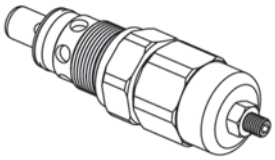

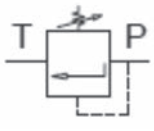

Performance Data

Spring Type Number: 1
Setting= 80 Bar -Range=63-125 Bar

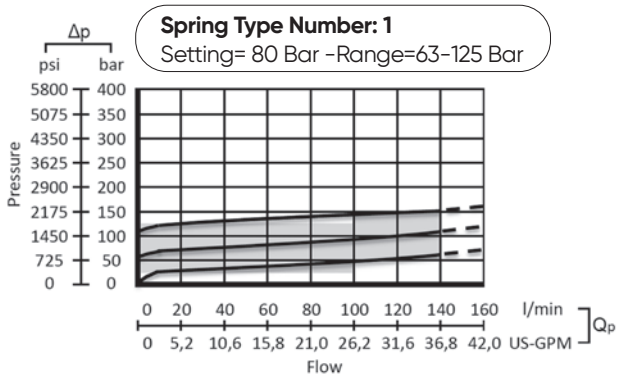

Spring Type Number: 2
Setting= 125 Bar -Range=100-165 Bar

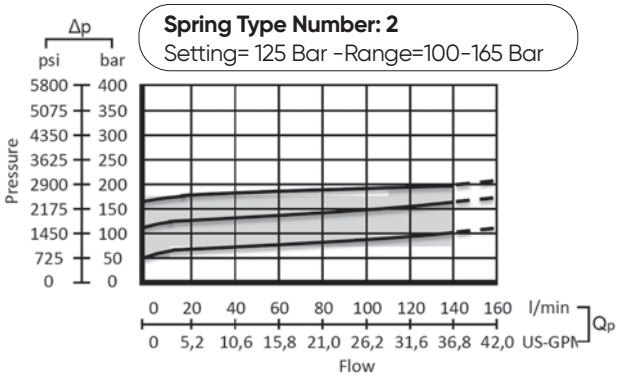

Spring Type Number: 3
Setting= 175 Bar -Range=125-250 Bar

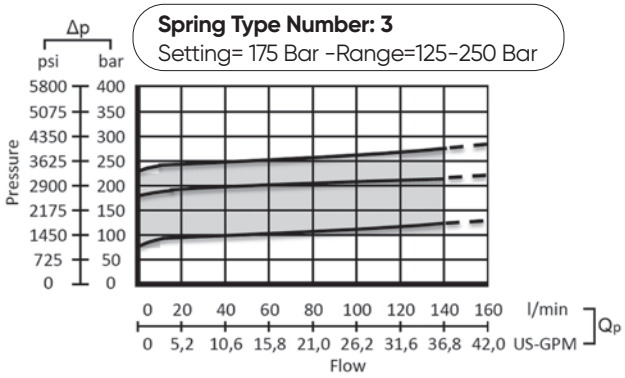

Spring Type Number: 4
Setting= 220 Bar -Range=200-315 Bar

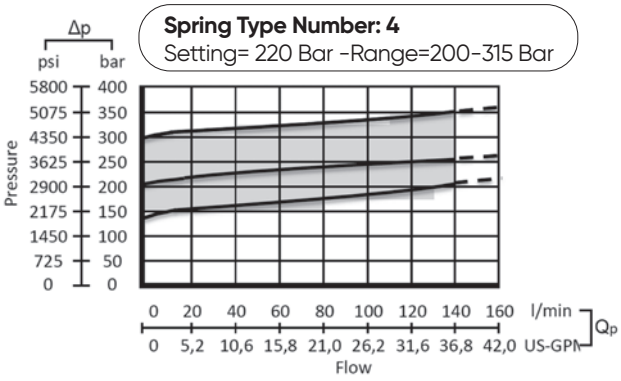

Adjustment Type on Valve

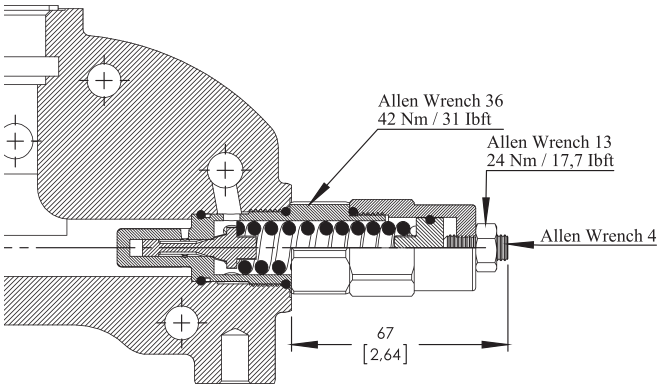

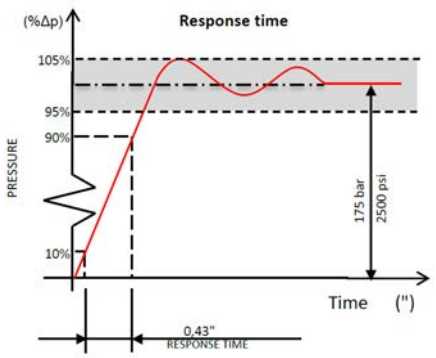

INLET RELIEF OPTIONS

Direct Pressure Relief Valve

Kit No: **PAC**

Sectional Appearance

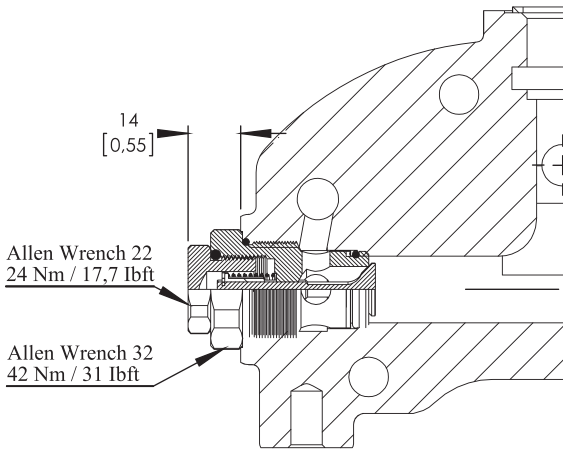

Diagram

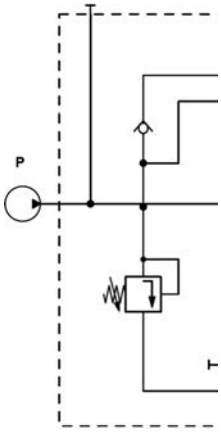

Performance Data

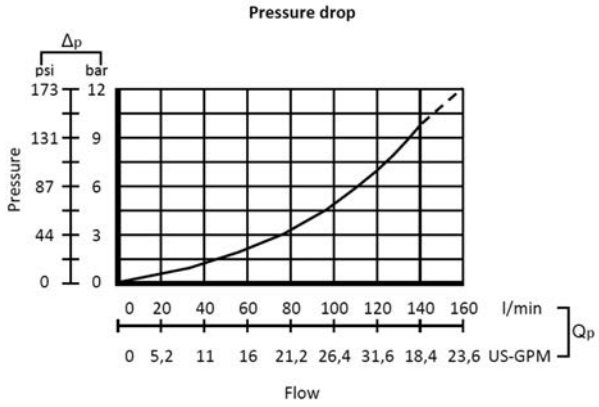

Relief Blanking Plug - SP

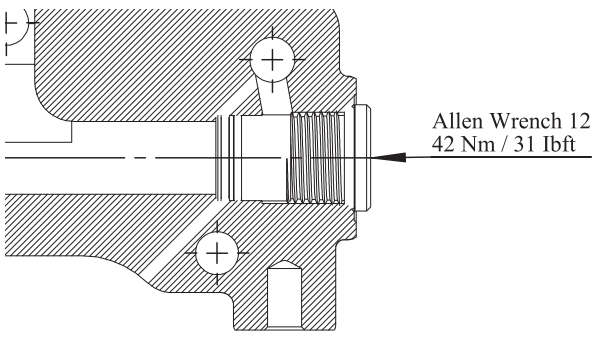

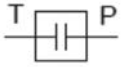

ORDERING CODES

Order Example

2.2 2.4 3.2

ORV PD120-2P (SD-SMR2-125-PP)/P-1A- STL- YAC-SR / P-1A-STL-150P / SO-PT1-CO / SGT

1 1.2 1.4 2.1 2.3 2.6 3.1 3.3

Base Code "0" — 1 st Section — Following Section — Output Section

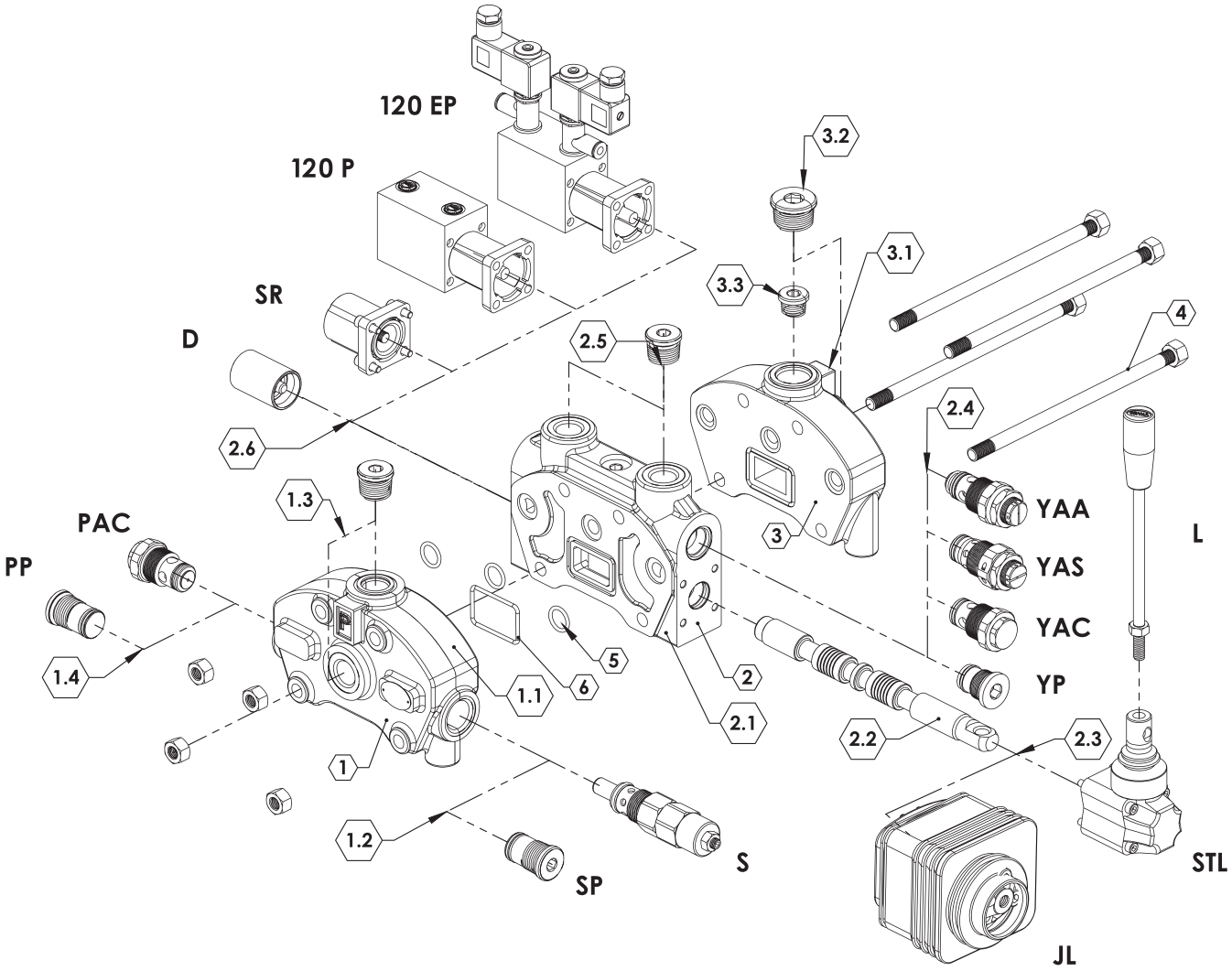

ORDERING CODES

1- Inlet Section

ORV PD120-2P PD120 = Valve Type-(PD)- Sectional
(120) - Max. Flow Rate
2P =Sections Quantity
SD = Side inlet with direct pressure relief valve (1SD120100)
TD = Top inlet with direct pressure relief valve (1TD120100)
SP = Side inlet with relief valve blanking plug (1SP120100)

2- Working Section

P = Parallel (2P120100)

3- Output Section

SO = Side outlet (3SO120100)
TO = Top outlet (3TO120100)
TCO = Top outlet with carry-over (3TCO120100)
TC = Top outlet with closed centre (3TC120100)

4- Assembling Kit

Tie rod kit for 1 section valve - (4TRK1120100)
Tie rod kit for 2 section valve - (4TRK2120100)
Tie rod kit for 3 section valve - (4TRK3120100)
Tie rod kit for 4 section valve - (4TRK4120100)
Tie rod kit for 5 section valve - (4TRK5120100)
Tie rod kit for 6 section valve - (4TRK6120100)
Tie rod kit for 7 section valve - (4TRK7120100)
Tie rod kit for 8 section valve - (4TRK8120100)
Tie rod kit for 9 section valve - (4TRK9120100)
Tie rod kit for 10 section valve - (4TRK10120100)
Tie rod kit for 11 section valve - (4TRK11120100)
Tie rod kit for 12 section valve - (4TRK12120100)

5-6- O_Ring Kit

5. -17.00x2.65 NBR 70 SH O-Ring seal (3 Qty.) (5MK150100)
6. -34.60x2.62 NBR 70 SH O-Ring seal (1 Qty.) (6MK150100)

1.*-Inlet Options

1.1 Inlet Cover
Body = Standard (11BS120100)
1.2 Inlet Relief
SMR1-080 – (12SMR1150080)–Range 63-125 bar
Setting 80 bar
SMR2-125 – (12SMR2150120)– Range 100-160 bar
Setting 125 bar
SMR3-175 – (12SMR3150175)– Range 125-250 bar
Setting 175 bar
SMR4-220 – (12SMR4150220)–Range 200-315 bar
Setting 220 bar
1.3 Ports Plug
PA1 = G1/2 Top and side input - (13PA1800100)
PA2= G3/4 Top and side input –(13PA2800100)
1.4 Inlet Valve
PAC =Inlet anti-cavitation valve –(14PAC150100)
PP(SP) = Relief valve blanking plug –(14PSP150100)

2.*- Working Options

2.1 Working Section
PA = Without ports valve prearrangement, with parallel circuit - Body (21BSPA120100)
2.2 Spool Options
1A -(22SS120110) – 3 Positions ,Double acting
2A -(22SS120120) – 3 Positions ,Double acting
A to tank B Blocked
3A -(22SS120130) – 3 Positions ,Double acting
B to tank A blocked
4A -(22SS120140) – 3 Positions ,Double acting
A and B tank
5A -(22SS120150) – 3 Positions ,Single acting on
A (A to tank)
6A -(22SS120160) – 3 Positions ,Single acting on
B (B to tank)
2.3 Lever Options
L = Standard HandLever (L=120mmxM10) - (7L040100)
JL =Joystick lever for two sections operation (5JL 080100)
STL = Standard Lever –(23STL150100)
HL = Remote Cable Kit – (80HL80100)
2.4 Port Relief Valves
Anti-Shock Valve
YAS (T1-50) – (24YAC150050)–Range 35-70 bar
Setting 50 bar
YAS (T1-100) – (24YAC150100)–Range 63-220 bar
Setting 100 bar
YAS (T1-200) – (24YAC150200)–Range 180-350 bar
Setting 200 bar
Anti-Shock and Anti-Cavitation Valve
YAA (T1-63) – (24YAA150063)–Range 35-70 bar
Setting 50 bar
YAA (T1-100) – (24YAA150100)–Range 63-220 bar
Setting 100 bar
YAA (T1-200) – (24YAA150200)–Range 180-350 bar
Setting 200 bar
YAC - Anti Cavitation– (24YAS150100)
YP- A and B ports valve blanking plug (24YP150100)
DST-A and B ports valve blanking plugs with
connection to tank–(24DST150100)
2.5 Ports Plug Options
PL1 =Plug for single action spool for 2A-3A, G1/2
(25PL180100)
PL2 =Plug for single action spool for 2A-3A, G3/4
(25PL280100)
2.6 Spool Positioners
SR=Spring Return in neutral position – (26SR150100)
D =Detent in position 1, neutral and 2 -(26D150100)
100P=ON/OFF Pneumatic – (2645P150100)
100EP=12 VDC ON/OFF electro-pneumatic
(26150EP150112)
100EH= 12 VDC/24 VDC ON/OFF electro-hydraulic
(36150EH100112)

3.*- Working Options

3.1 Working Section
Body = Standard (31BS150100)
3.2 Output Plug
PT1 =G3/4 Top and Side output (32PT180100)
3.3 Circuits Options
CO =G1/8 Carry–Over Connector (33CO150100)

INLET COVER- PUMP SIDE

LH Inlet Valve Options

Type No: **SD**

Sectional Appearance

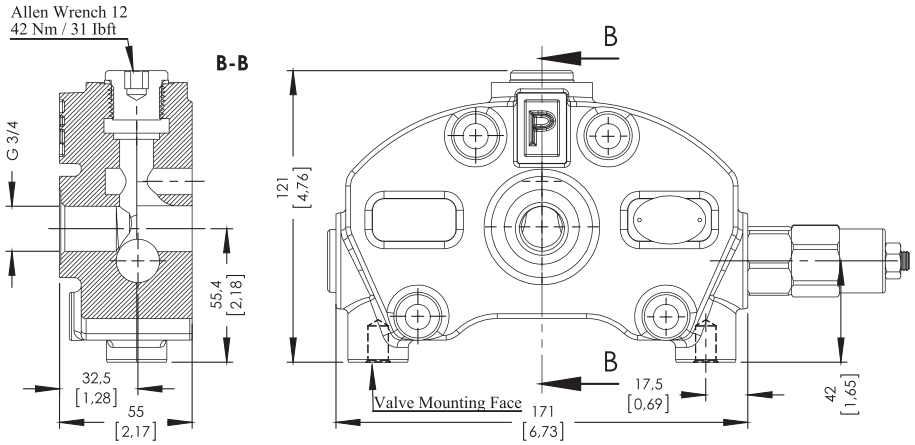

Type No: **TD**

Sectional Appearance

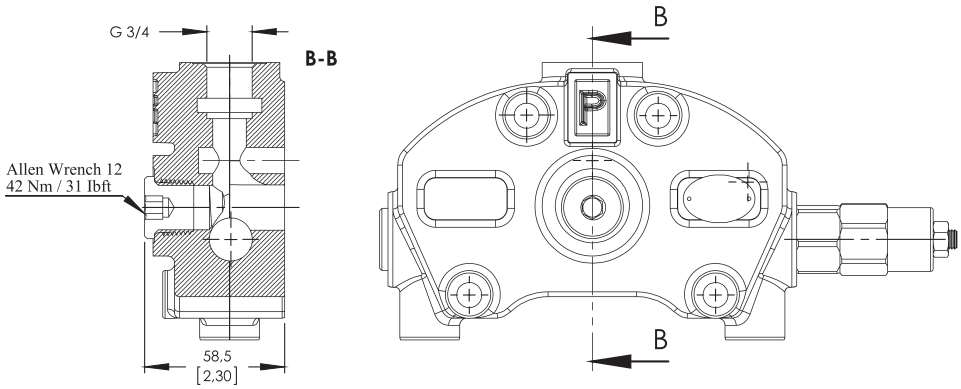

Hydraulic Diagram

Type No: **SD**

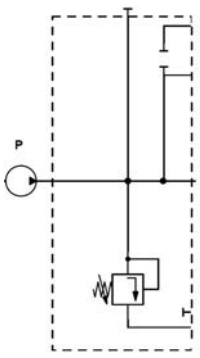

Type No: **TD**

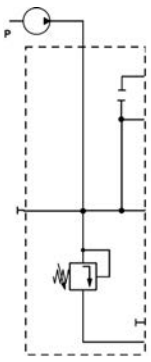

INLET COVER- PUMP SIDE

RH Inlet Valve Options

Type No: **RA**

Sectional Appearance

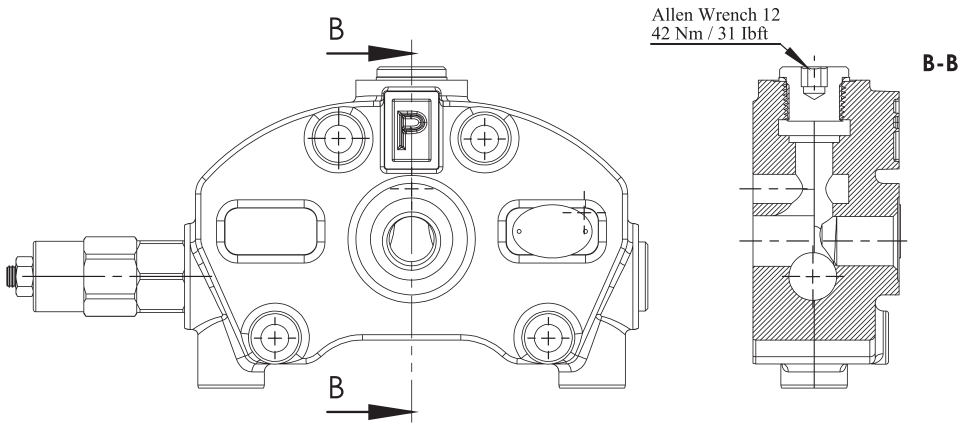

Type No: **RB**

Sectional Appearance

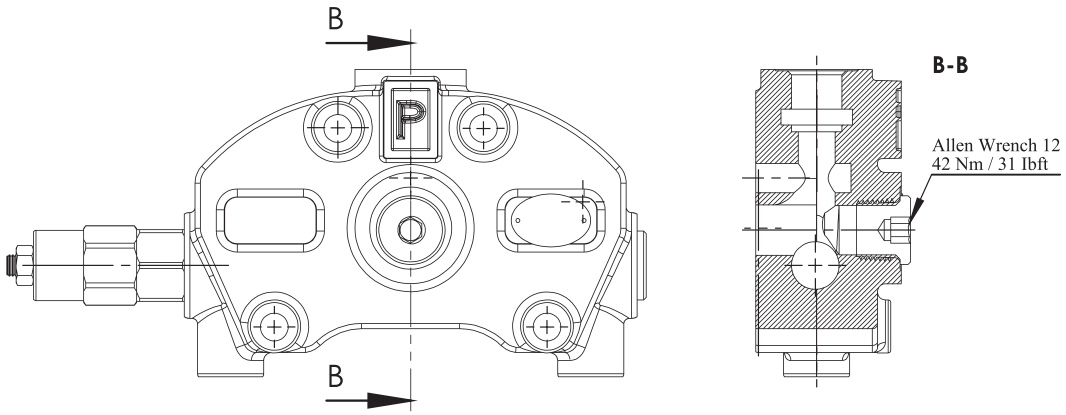

Hydraulic Diagram

Type No: **RA**

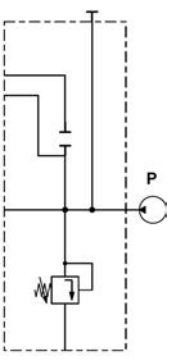

Type No: **RB**

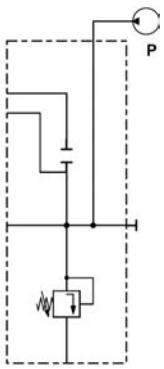

SPOOL OPTIONS

Spool Type - 1A

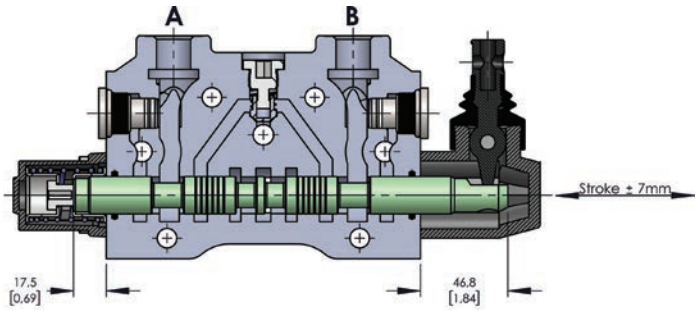

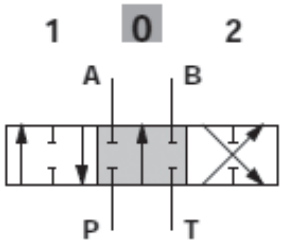

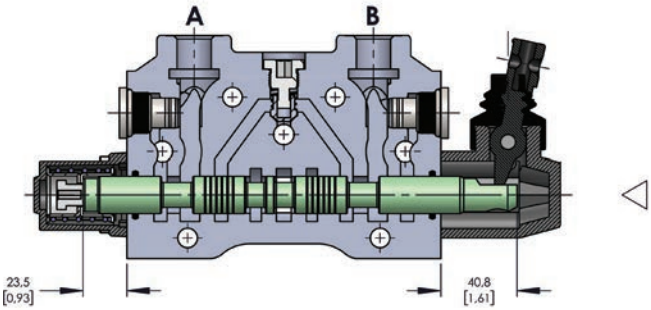

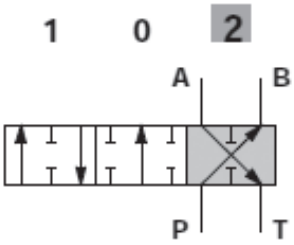

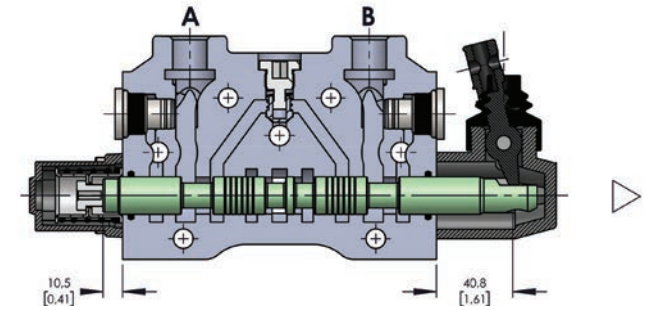

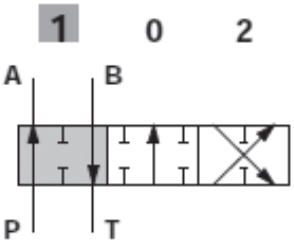

Performance Curve And Data

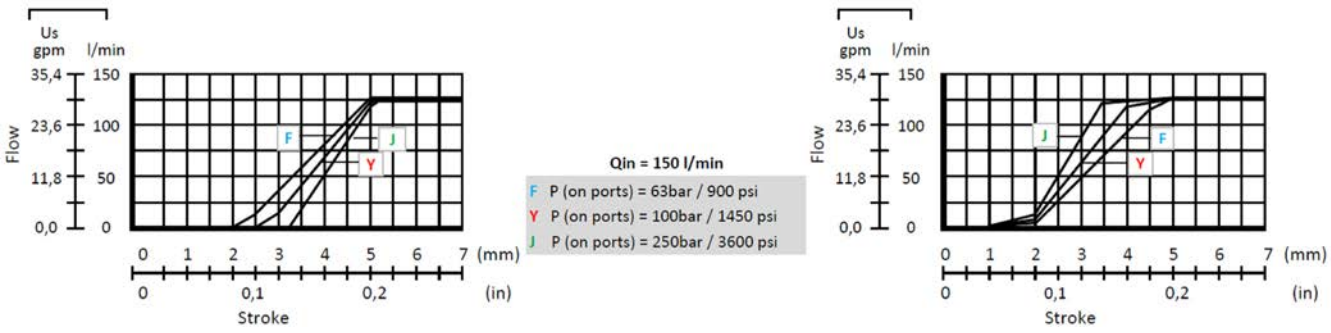

SPOOL OPTIONS

Spool Type - 2A

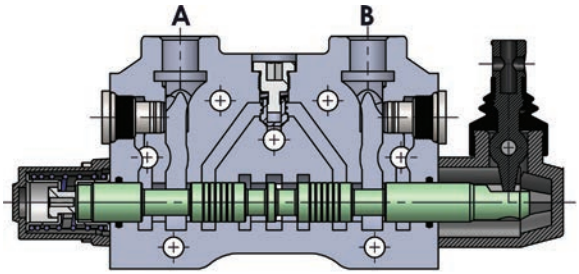

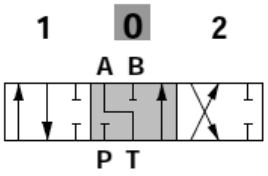

Spool Type - 3A

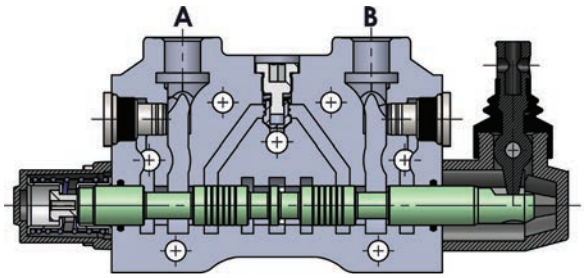

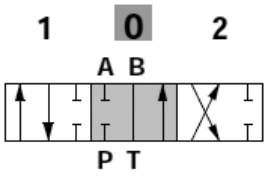

Spool Type - 4A

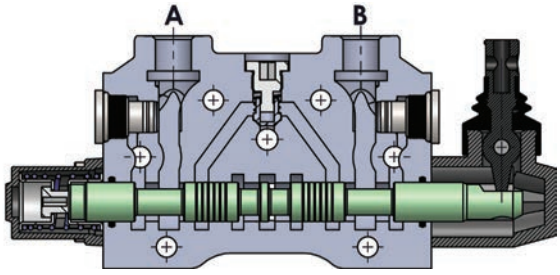

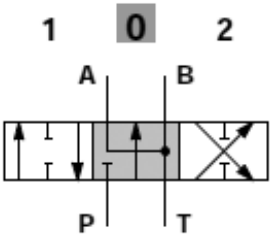

Spool Type - 5A

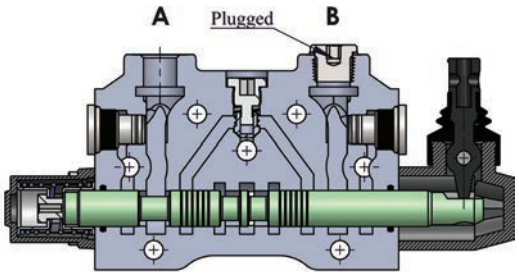

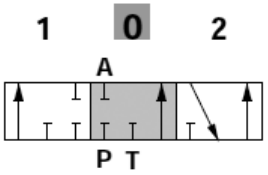

"B" port plugged

Spool Type - 6A

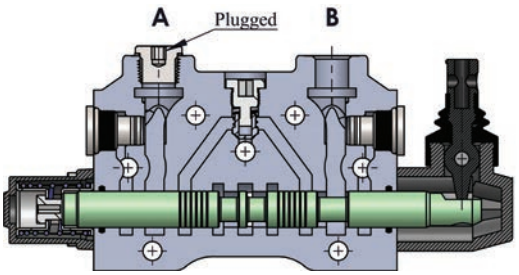

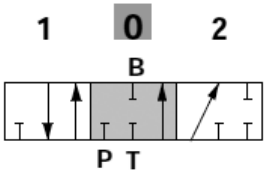

"A" port plugged

SPOOL POSITIONERS – SIDE OF RETURN

With Spring Return in Neutral Position

Kit No: **SR**

Sectional Appearance

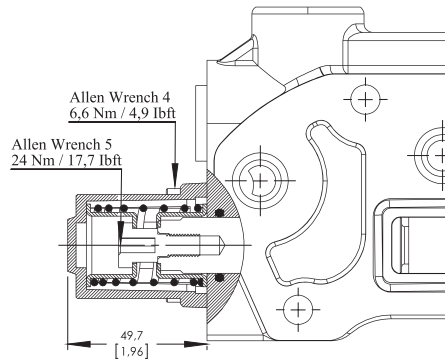

Diagram



With Detent

Kit No: **D**

Sectional Appearance

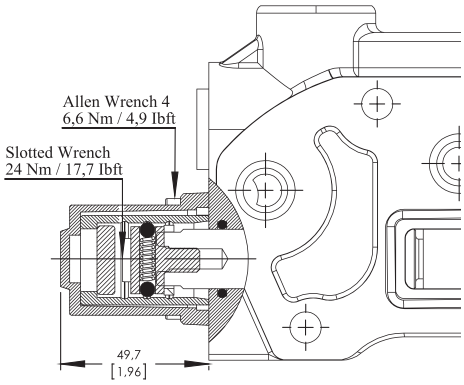

Diagram

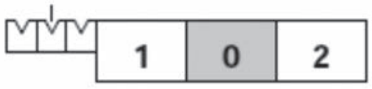

Force - stroke diagram

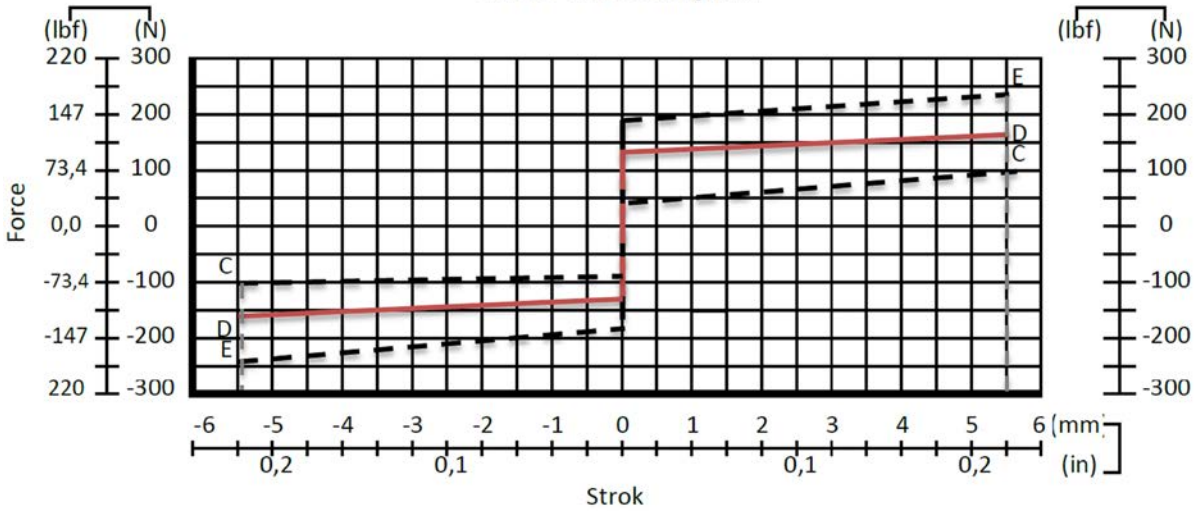

SPOOL POSITIONERS – SIDE OF RETURN

ON/OFF Pneumatic Control

Kit No: **120P**

Sectional Appearance

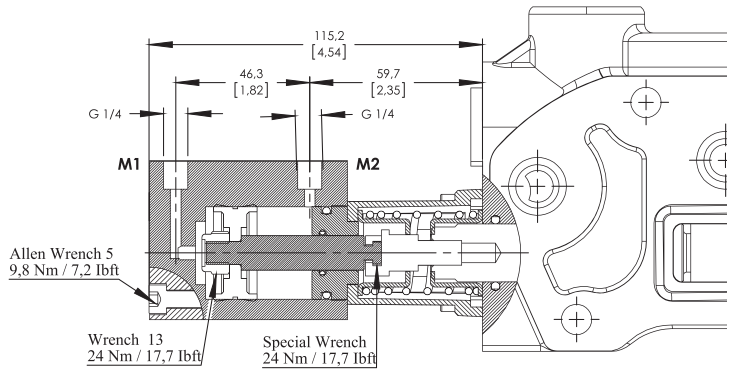

Diagram

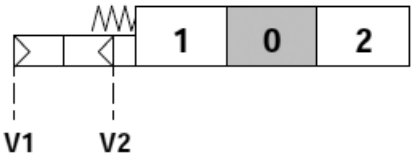

Operating Features

Pilot Pressure .....: 6 Bar (Max. 10) / 87 Psi (Max. 145)

ON/OFF Electro-Pneumatic Control

Kit No: **120EP**

Sectional Appearance

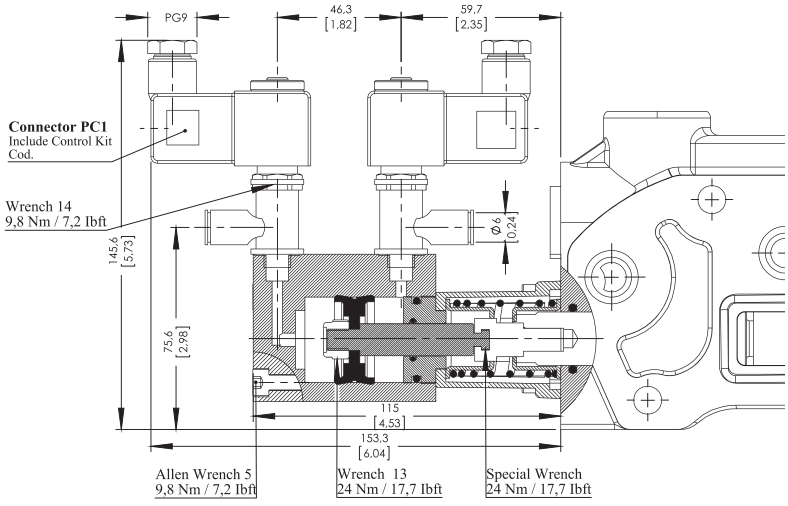

Diagram

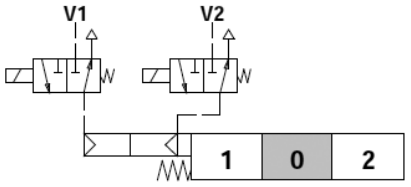

Operating Features

Pilot Pressure .....: 6 Bar (Max. 10) / 87 Psi (Max. 145)

Selenoid Operating Features

Nominal Voltage.....: 12VDC / 24 VDC

Power Rating.....: 6 W

SPOOL POSITIONERS – SIDE OF RETURN

ON/OFF Electro - Hydraulic Control

Kit No: **120EH**

Sectional Appearance

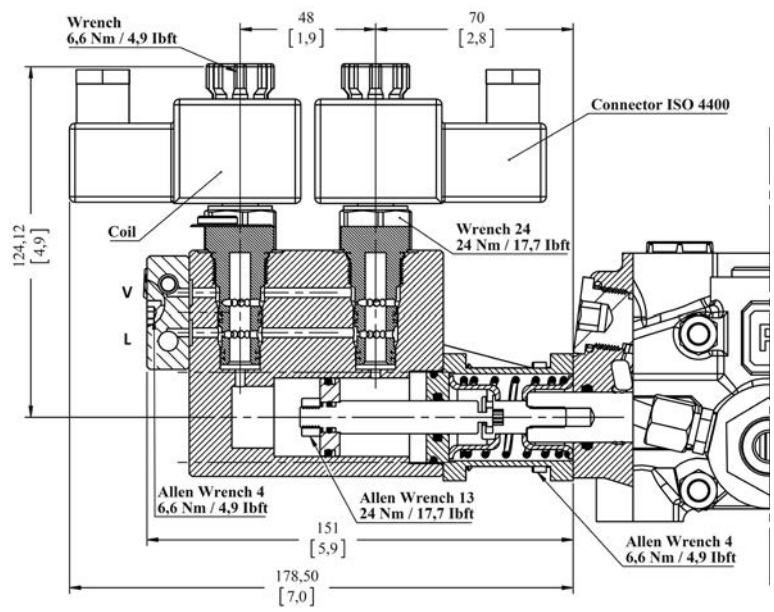

Diagram

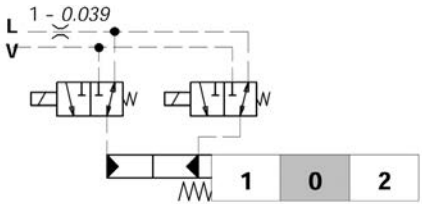

Operating Features

Pilot Pressure .....: 10 Bar / 145 Psi
: 50 Bar / 725 Psi
Max back pressure on drain L....:25 Bar / 360 Psi

Selenoid Operating Features

Coil Connection.....: ISO 4400
Nominal voltage.....: 12 VDC / 24 VDC
Power rating.....: 21 W
Duty cycle.....: %100
Protection type.....: IP 65
Nominal voltage tolerance.....: ±10
Max temperatures.....: 100 C°
Stroke.....: ±5,5 mm

ORDER CODE

External Pilot Collector
COL 11 - 10COL1001 – Kit For Section 1
COL 12 - 10COL1001 – Kit For Section 2
COL 13 - 10COL1001 – Kit For Section 3
COL 14 - 10COL1001 – Kit For Section 4
COL 15 - 10COL1001 – Kit For Section 5
COL 16 - 10COL1001 – Kit For Section 6
COL 17 - 10COL1001 – Kit For Section 7
COL 18 - 10COL1001 – Kit For Section 8

Standard Pilot Collector
COL 21 - 10COL2001 – Kit For Section 1
COL 22 - 10COL2001 – Kit For Section 2
COL 23 - 10COL2001 – Kit For Section 3
COL 24 - 10COL2001 – Kit For Section 4
COL 25 - 10COL2001 – Kit For Section 5
COL 26 - 10COL2001 – Kit For Section 6
COL 27 - 10COL2001 – Kit For Section 7
COL 28 - 10COL2001 – Kit For Section 8

SPOOL POSITIONERS – SIDE OF RETURN

ON/OFF Electro - Hydraulic Control Connections

Connection Type 1: **Collector kit for external pilot and drain**

Sectional Appearance

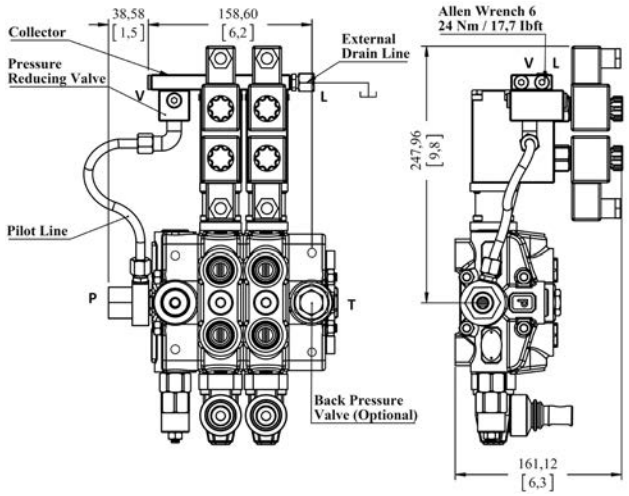

Diagram

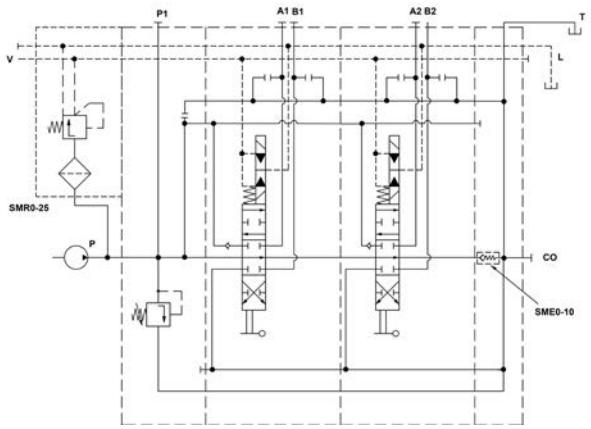

Operating Features
External Pressure Reducing Valve .....: 20 Bar / 290 Psi (For V line)
Code= ORV PD120-2P (SD(LA)-SMR2-125-PP)/P-1A-STL-120EH/ P-1A-STL-120EH (SMR0 -COL12-12V)/ SO-PT1 / SGT

Connection Type 2: **Collector kit with pilot and drain lines**

Sectional Appearance

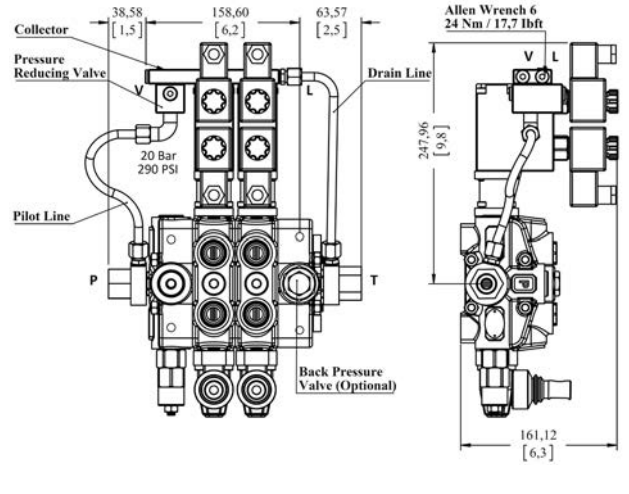

Diagram

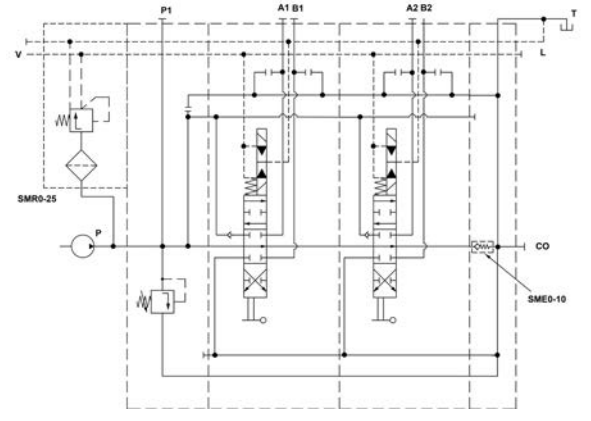

SMR 0-25 Valve Operating Features (Pressure reducing valve)
Outlet Pressure .....: 20 Bar / 290 Psi
Max. Flow.....: 8 l/min
Filtering .....:80 µ
Code= ORV PD120-2P (SD(LA)-SMR2-125-PP)/P-1A-STL-120EH/ P-1A-STL-120EH (SMR0 –COL22-12V)/ SO-PT1 / SGT

WORKING SECTION KIT

With Port Valves Type

Kit No: **AA**

Sectional Appearance

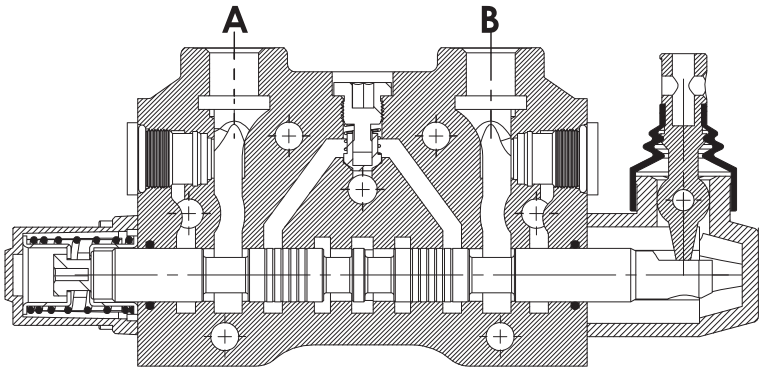

Diagram

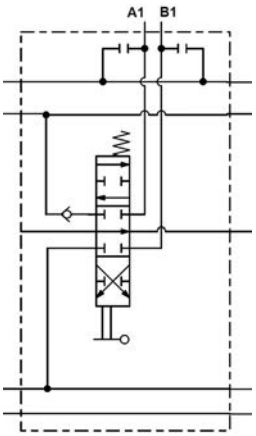

With Port Valves Type

Kit No: **AB**

Sectional Appearance

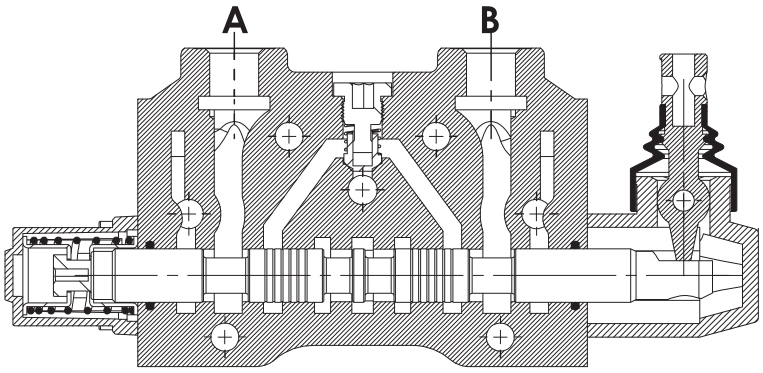

Diagram

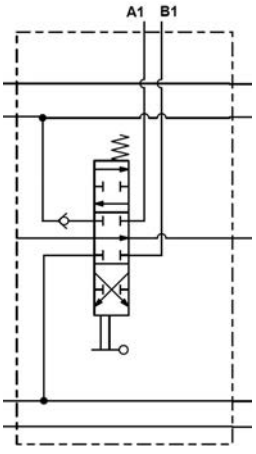

SPOOL POSITIONERS – SIDE OF LEVER CONTROL

Lever Controls

Kit No: **STL - L0**

Sectional Appearance

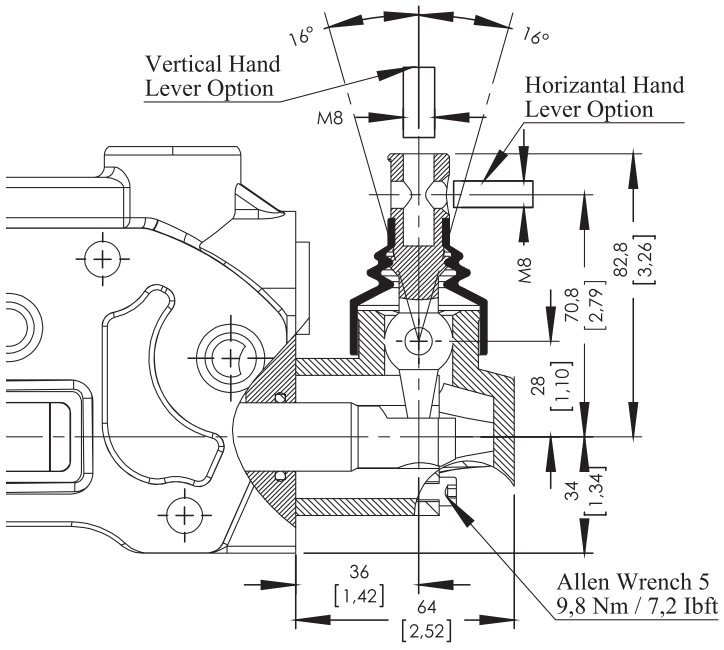

Diagram

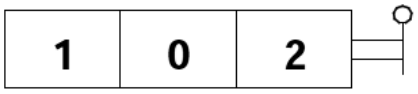

Kit No: **STL - L180**

Sectional Appearance

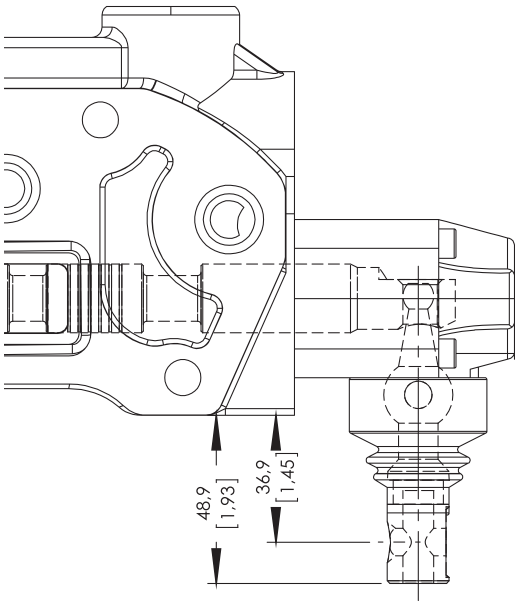

Diagram

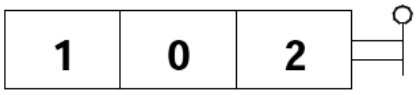

Note: Arm lever pivot box is aluminium cap protected. And it can be rotated 180º.

SPOOL POSITIONERS – SIDE OF LEVER CONTROL

Lever Controls - Joystick

Kit No: **JL**

Exploded View | Diagram

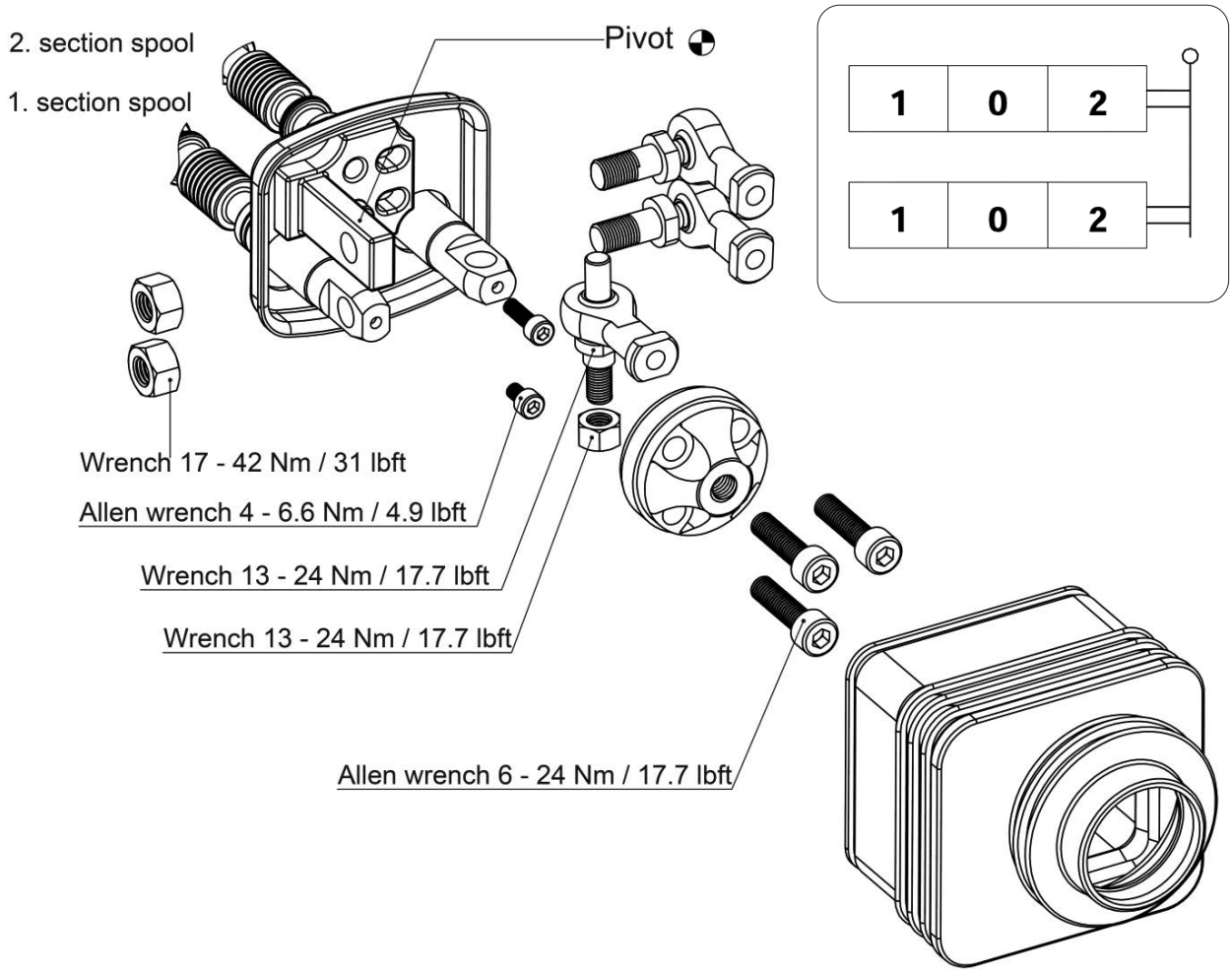

Operation Angle:

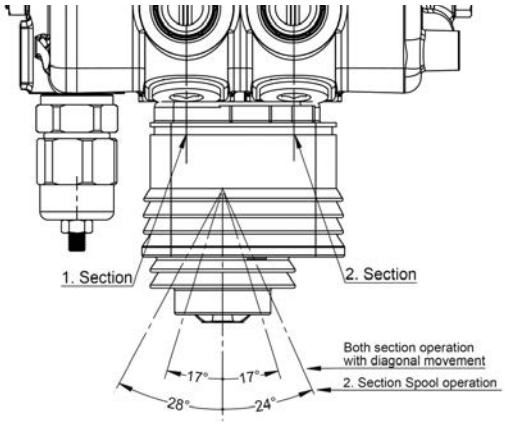

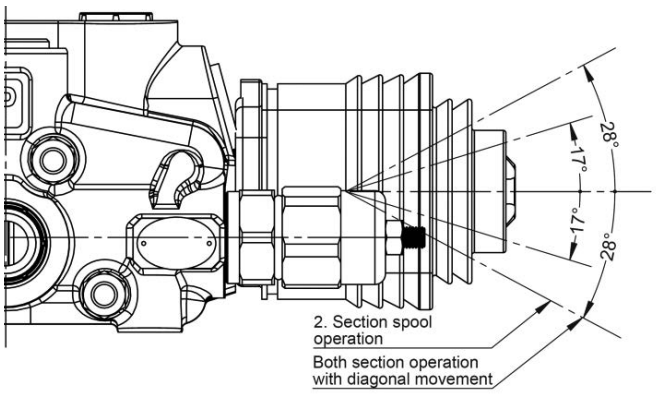

SPOOL POSITIONERS – SIDE OF LEVER CONTROL

Lever Controls - Joystick

Dimensions and movement sceme

Type No: **JL1** — **Application:** Pivot placed down on the Left

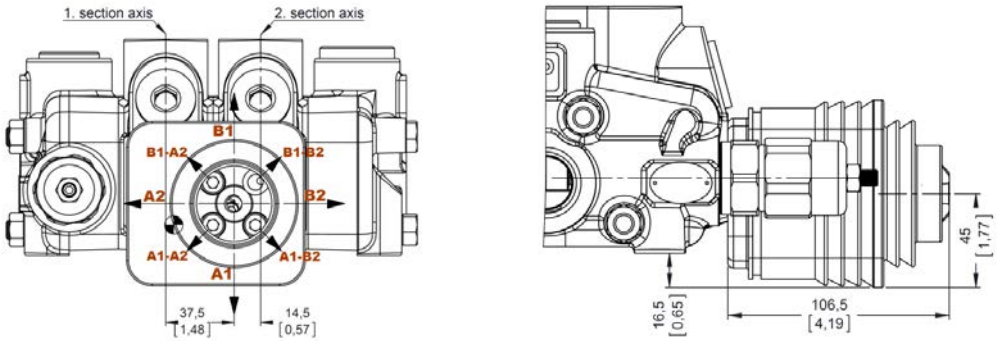

Type No: **JL2** — **Application:** Pivot placed down on the right

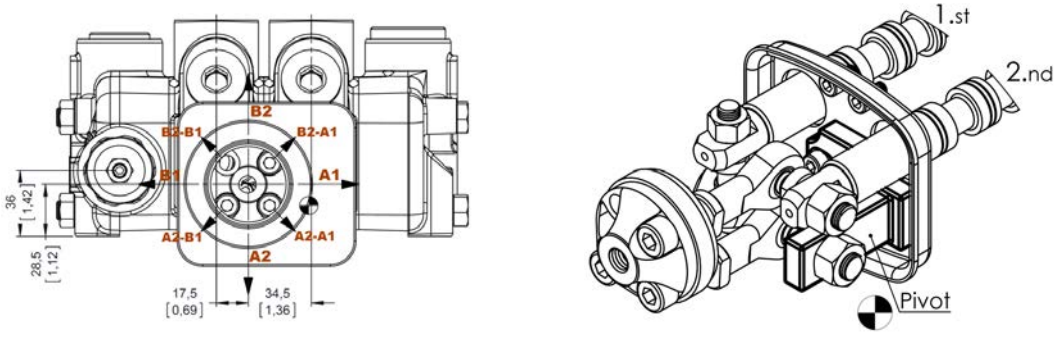

Type No: **JL3** — **Application:** Pivot placed above on the Left

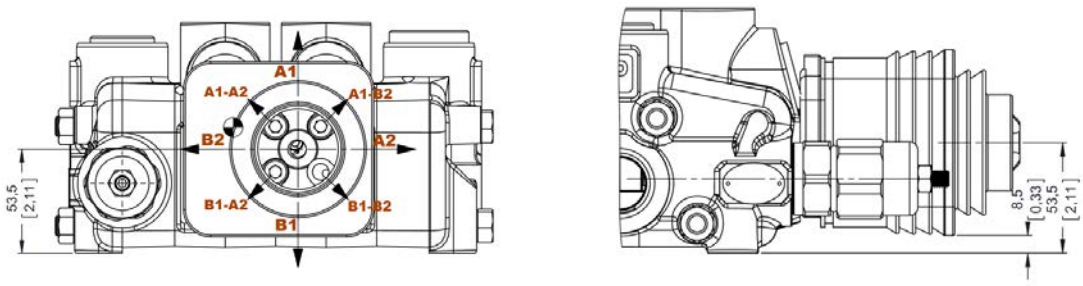

Type No: **JL4** — **Application:** Pivot placed above on the right

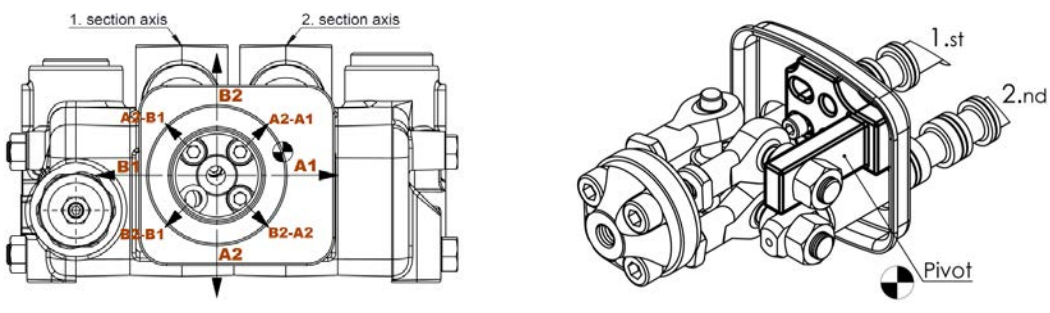

SPOOL POSITIONERS – SIDE OF LEVER CONTROL

Lever Controls - Cable Control

Kit No: **HL**

Sectional Appearance | Diagram

Waterproof cap prearranged for remote control with flexible cable.

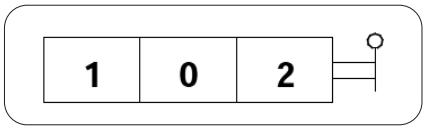

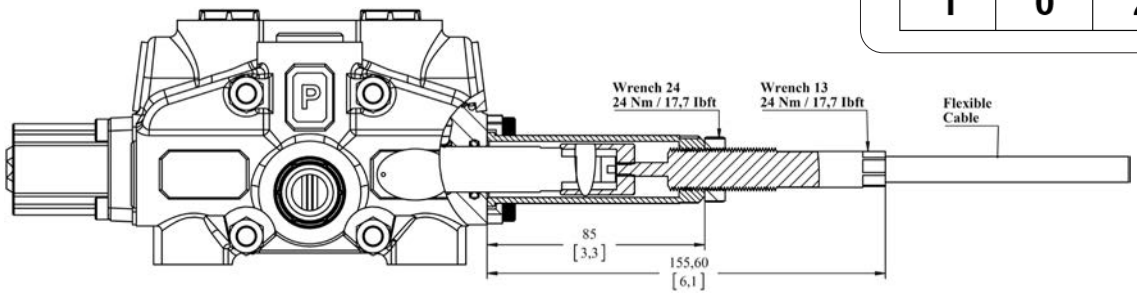

Note: Remote cable control is several options. Please indicote the cable length demanded and contact our sales department.

Example Operation

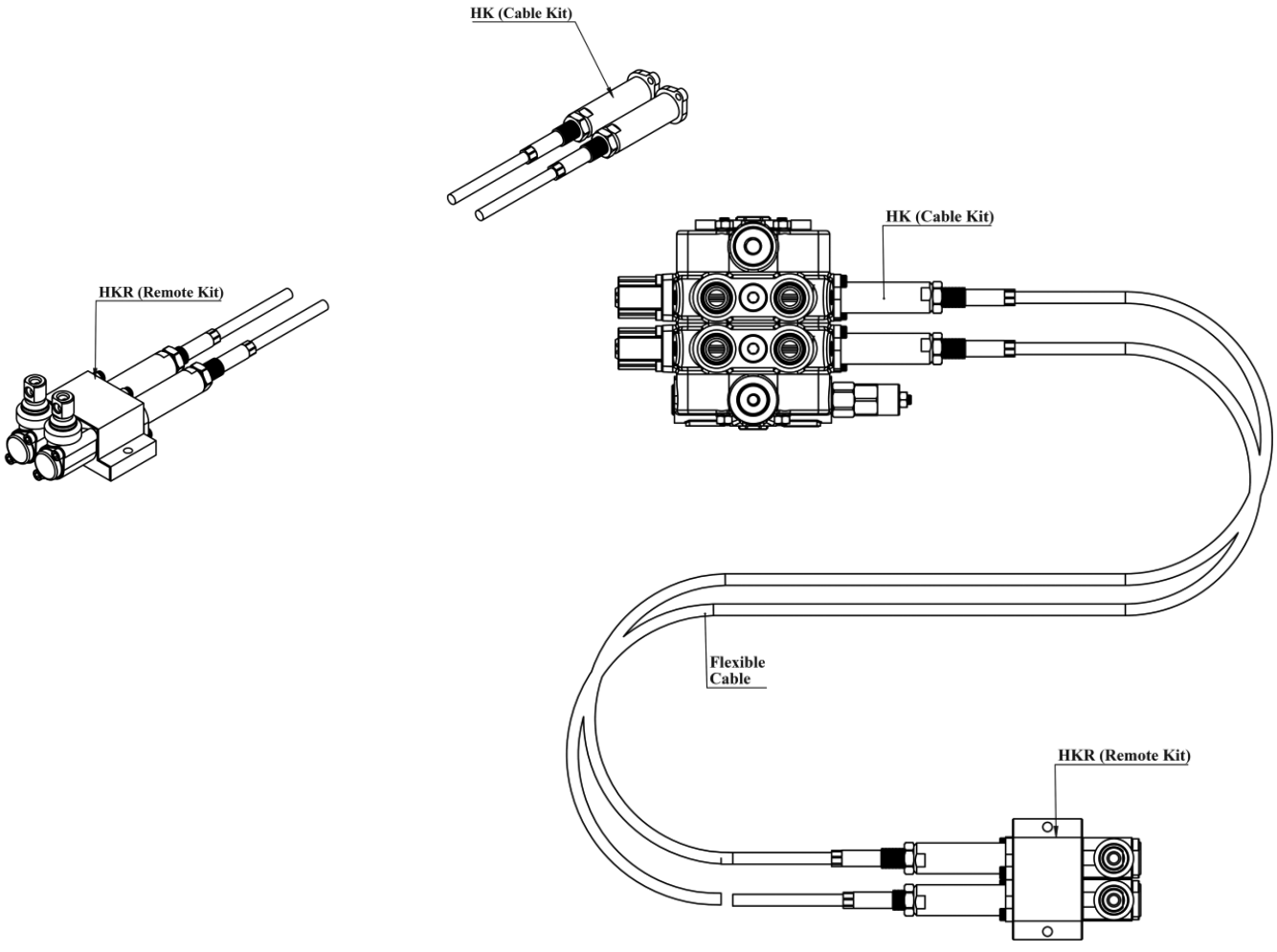

OUTLET COVER - TANK SIDE

Output Cover Options

Kit No: **SO**

Sectional Appearance

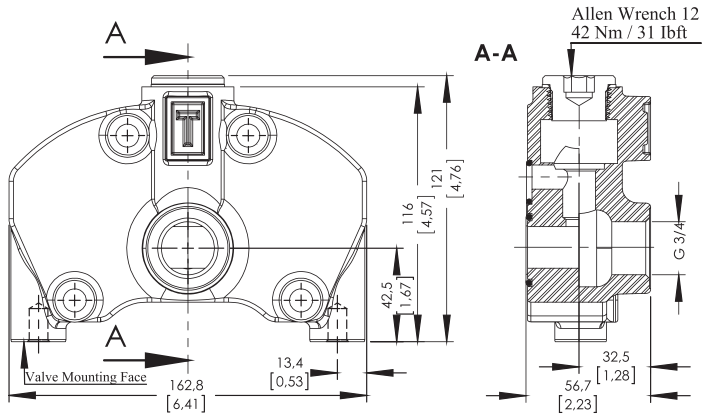

Type No: **TO**

Sectional Appearance

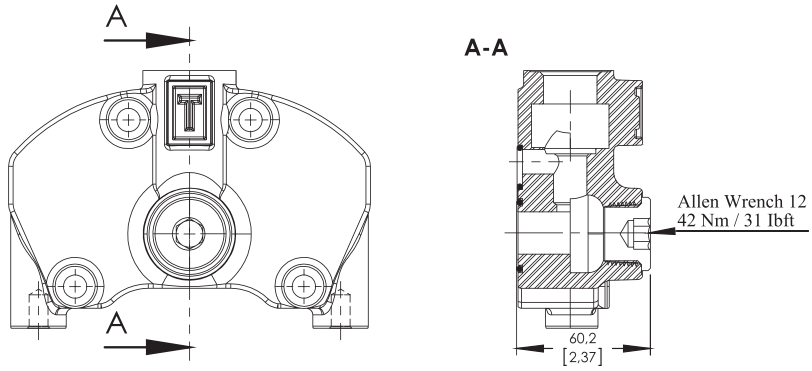

Hydraulic Diagram

Type No: **SO**

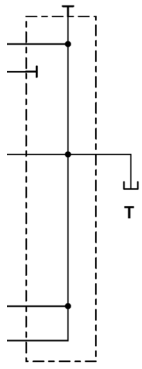

Type No: **TO**

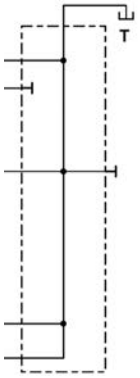

OUTLET COVER - TANK SIDE

Output Cover Options

Kit No: **TCO**

Sectional Appearance

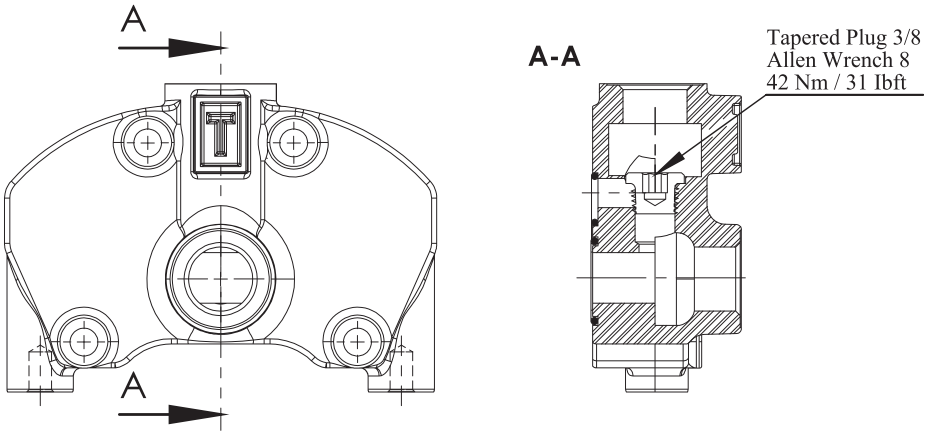

Kit No: **TC**

Sectional Appearance

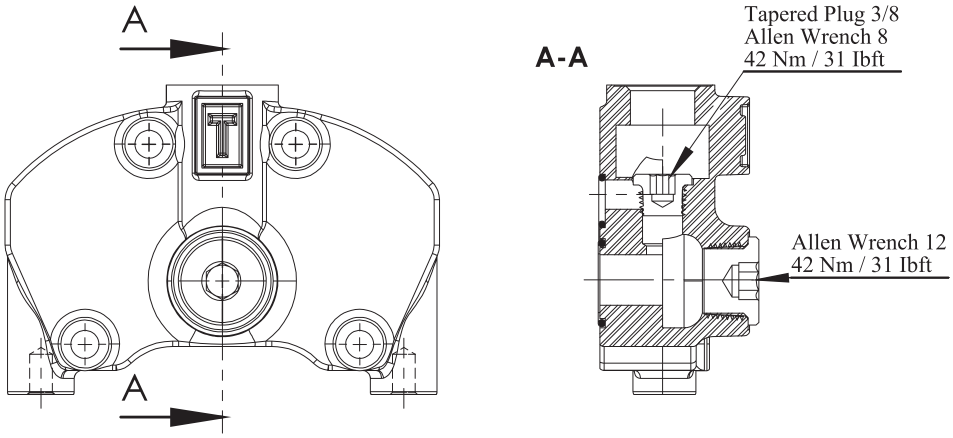

Hydraulic Diagram

Type No: **TCO**

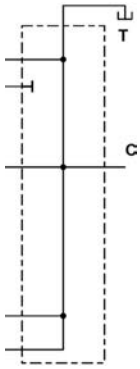

Type No: **TC**

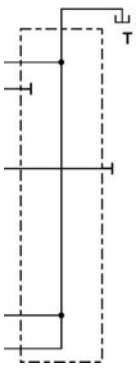

PORT VALVES OPTIONS

Anti Shock Valves

Code:

YAS-1 (T1-100)

- **Pressure Setting in Bar**
- **Adjusting type T=With screw , L=Valve Set / Spring Type (1,2,3)**
- **1 = Mounted Port A , 2 = Mounted Port B , 3 = Mounted Port A and B**

Hydraulic Diagram

Kit No: **YAS1**

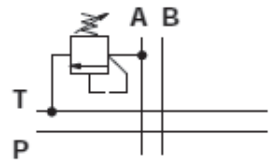

Kit No: **YAS2**

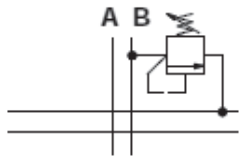

Kit No: **YAS3**

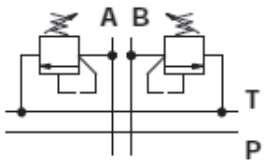

Adjustment Type on Valve:

T = With screw

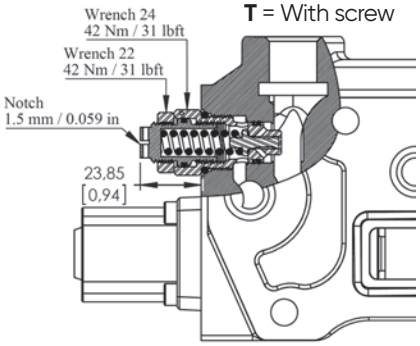

L = Valve set

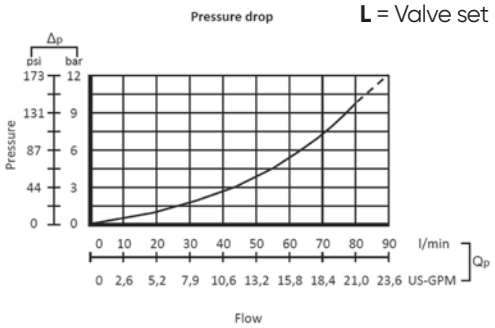

Performance Data:

Spring No=1 , Setting 50 bar / 725 psi

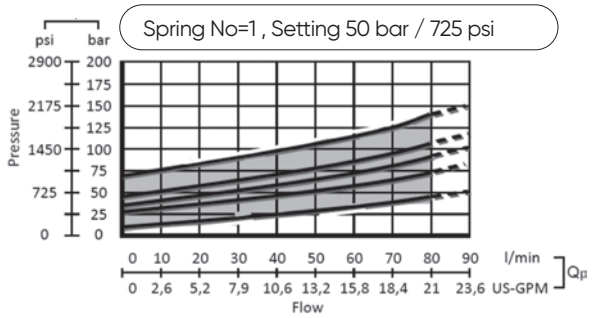

Spring No=2 , Setting 100 bar / 1450 psi

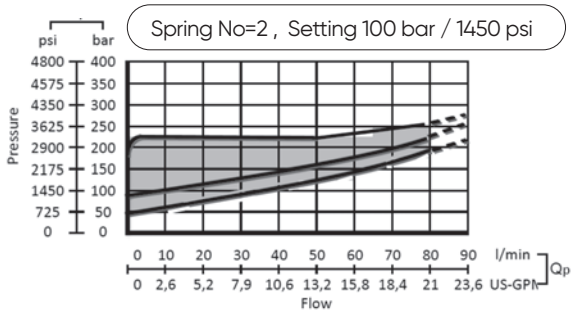

Spring No=3 , Setting 200 bar / 2900 psi

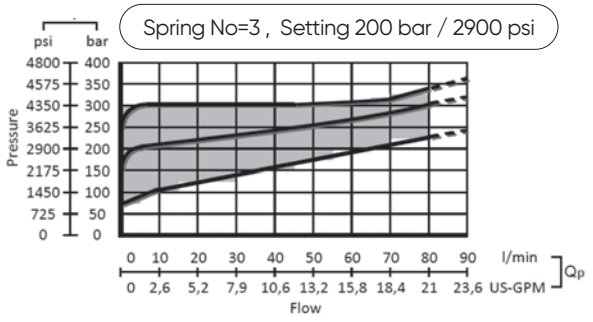

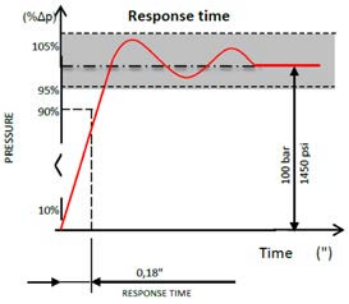

PORT VALVES OPTIONS

Anti shock And Anti Cavitation Valves

Code:

YAA-1 (T1-100)

- **Pressure Setting in Bar**
- **Adjusting type T=With screw , L=Valve Set / Spring Type (1,2,3)**
- **1 = Mounted Port A , 2 = Mounted Port B , 3 = Mounted Port A and B**

Hydraulic Diagram

Kit No: **YAA1**

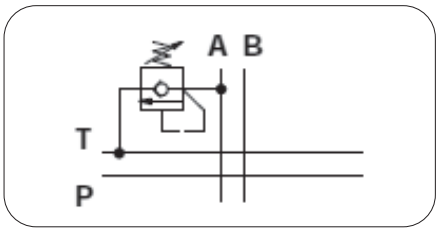

Kit No: **YAA2**

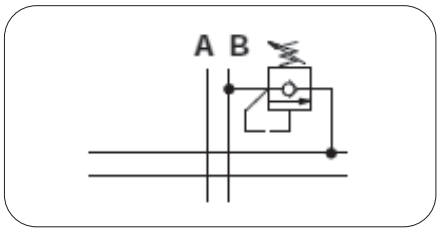

Kit No: **YAA3**

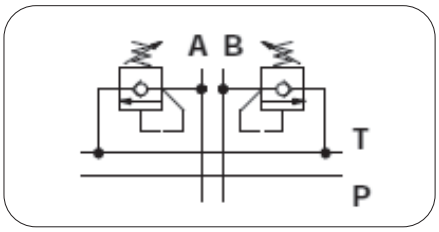

Adjustment Type on Valve:

T = With screw

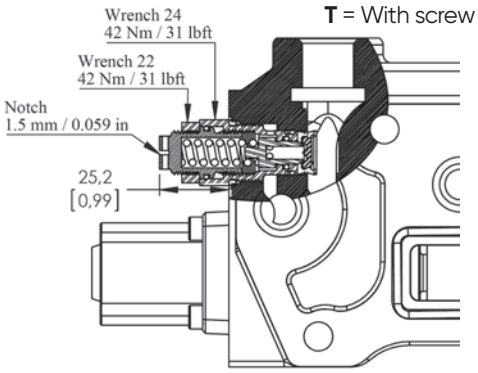

L = Valve set

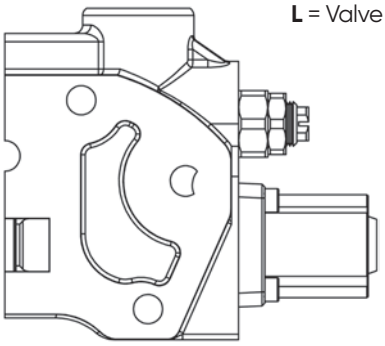

Performance Data:

Spring No=1 , Setting 63 bar / 900 psi

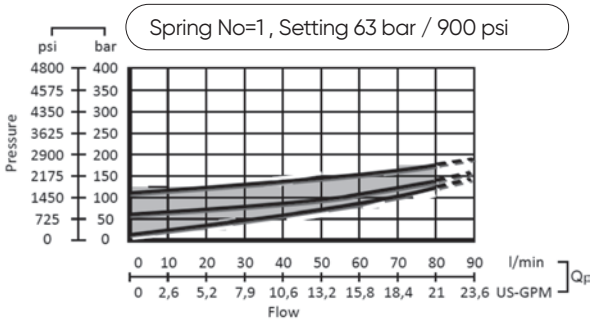

Spring No=2 , Setting 100 bar / 1450 psi

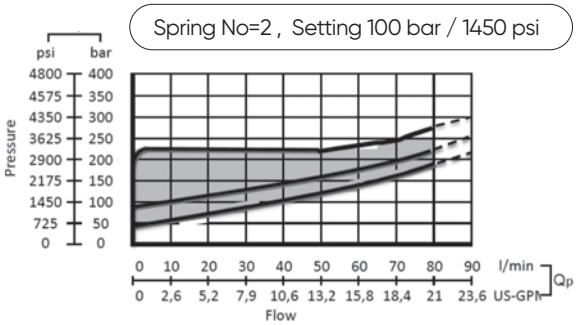

Spring No=3 , Setting 200 bar / 2900 psi

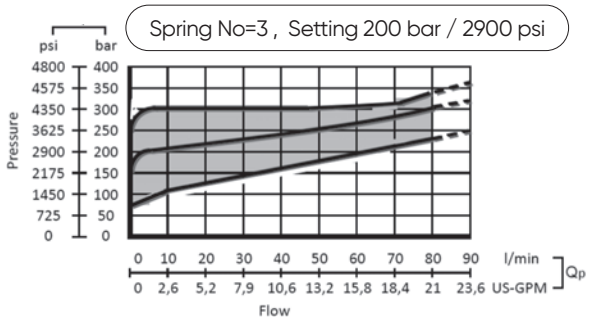

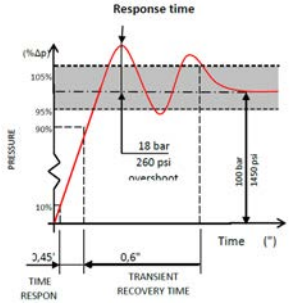

PORT VALVES OPTIONS

Anti Cavitation Valves

Code:

YAC-1 → **1 =** Mounted Port A , 2=Mounted Port B , 3=Mounted Port A and B

Hydraulic Diagram

Kit No: **YAC1**

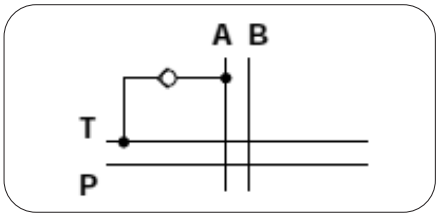

Kit No: **YAC2**

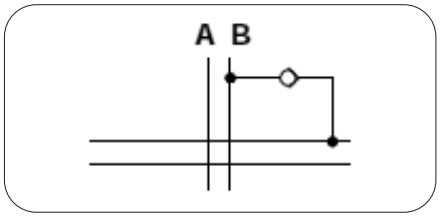

Kit No: **YAC3**

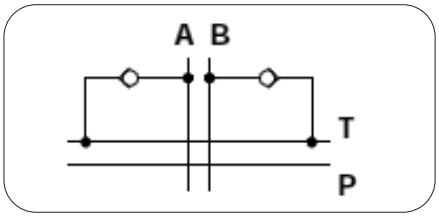

Adjustment Type on Valve And Data:

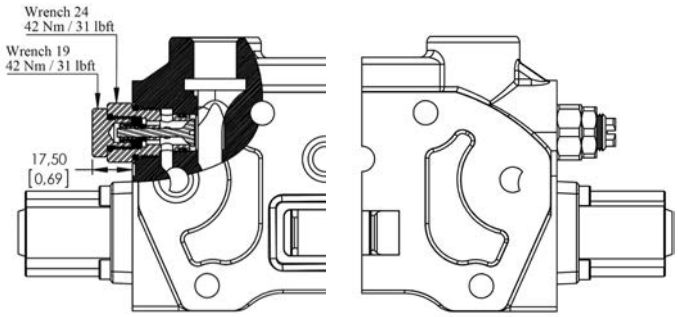

Valve Blaking

Plug with tank connection

DST-1 (1:Mounted port A – 2:Mounted port B)

Sectional Appearance

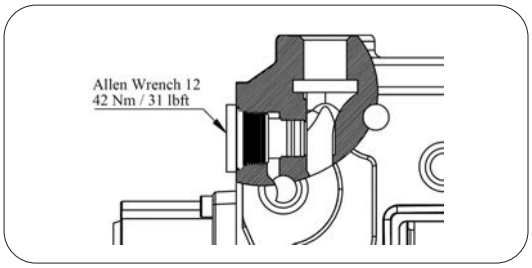

Hydraulic Diagram

DST1

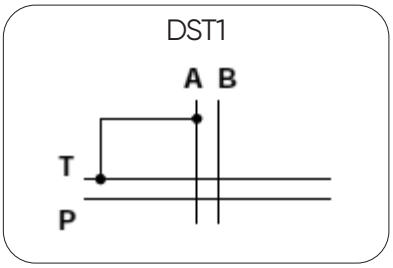

DST2

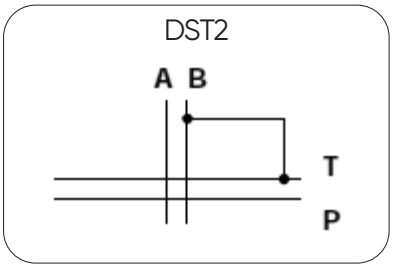

Plug

YP-1 (1:Mounted port A – 2:Mounted port B – 3:Mounted port A and B)

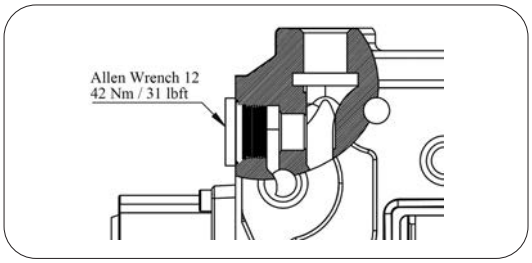

YP1

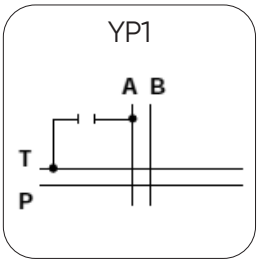

YP2

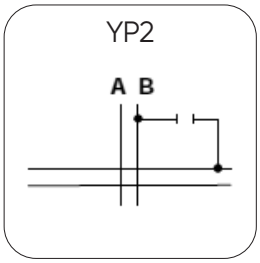

YP3

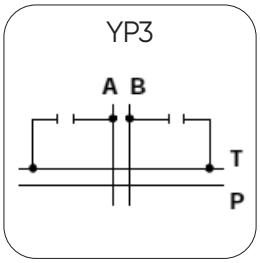

INSTALLATION AND MAINTENANCE

The ORV-PD120 valve is assembled and tested as per the technical specification of this catalog. Before the final installation on your equipment, follow the below recommendation:

• The valve can be assembled in any position, in order to prevent body deformation and spool sticking mount the product on a flat surface;

• In order to prevent the possibility of water entering the lever box and spool control kit, do not use high pressure wash down directly on the valve;

• Before painting, ensure plastic port plugs are tightly in place.

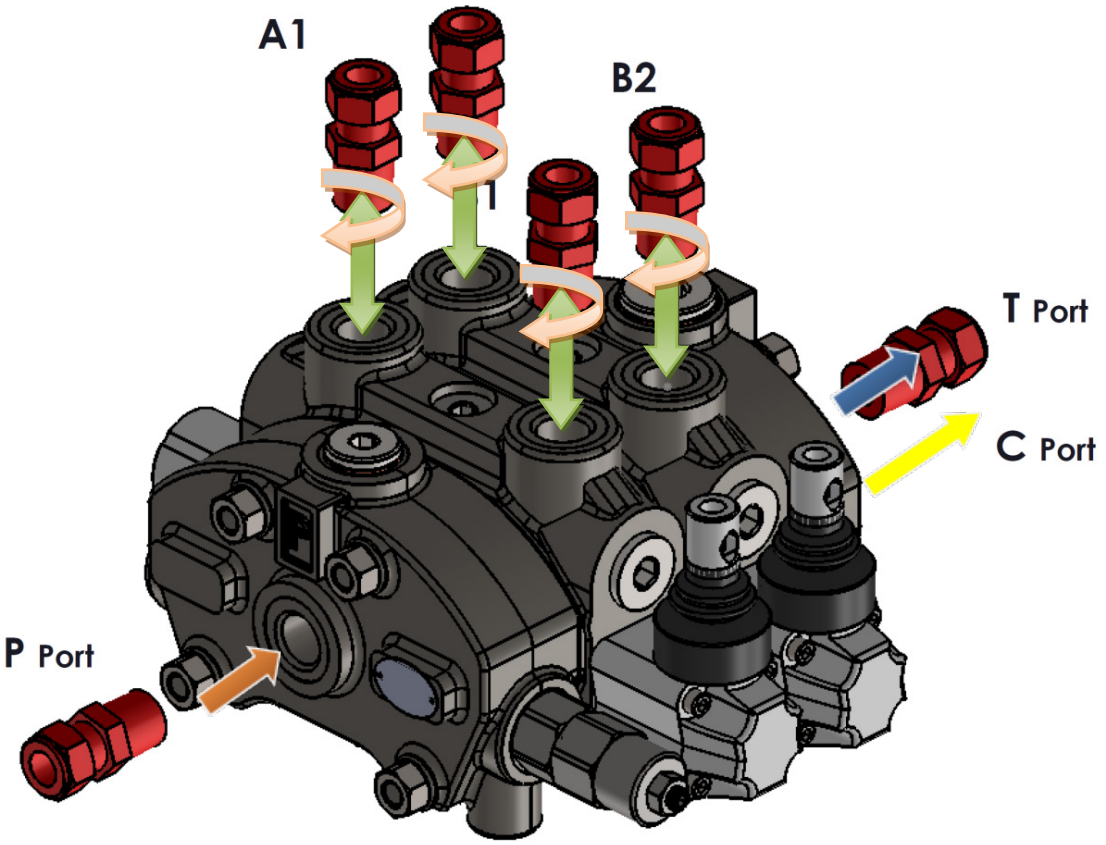

Threads Type (Nm / lbft)	P Port	A and B Port	T Port
BSP (ISO 228/1)	G 1/2	G 1/2	G 3/4
With O--Ring seal	50 / 36.9	50 / 36.9	70 / 51.6
With copper washer	60 / 44.3	60 / 44.3	70 / 51.6
With steel and rubber washer	60 / 44.3	60 / 44.3	70 / 51.6
BSP (ISO 228/1)	G 3/4	G 3/4	G 3/4
With O--Ring seal	70 / 51.6	70 / 51.6	70 / 51.6
With copper washer	70 / 51.6	70 / 51.6	70 / 51.6
With steel and rubber washer	70 / 51.6	70 / 51.6	70 / 51.6
UN--UNF (ISO 11926--1)	11/16--12 UNF--2B	7/8--16 UNF--2B	11/16--12 UNF--2B
With O--Ring seal	95 / 70	30 / 22.1	95 / 70

TECHNICAL DATA

Ports Dimensional Data

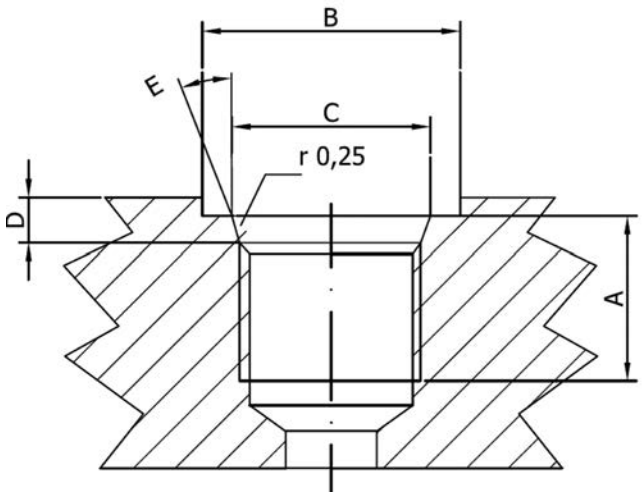

SAE UN-UNF (ISO 725)						
Dimensions		7/8-14 UNF SAE10		1"1/16-12 UN SAE12		1"5/16-12 UN SAE16	
mm	in						
A		17	0,67	20	0,79	20	0,79
B		34	1,34	41	1,61	49	1,92
C		23,9	0,94	29,2	1,15	35,5	1,40
D		2,5	0,10	3,3	0,13	3,3	0,13
E		15°		15°		15°	

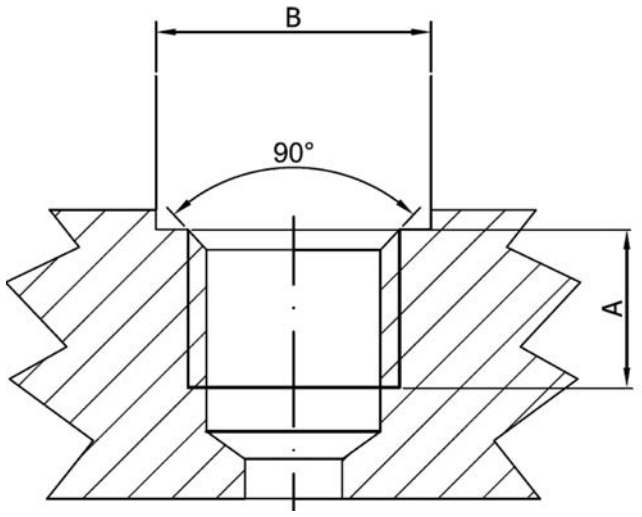

BSP (ISO 228)						
Dimensions		G 1/2"		G3/4		G1	
mm	in						
A		16	0,63	18	0,71	20	0,79
B		27	1,06	33	1,30	40	1,57

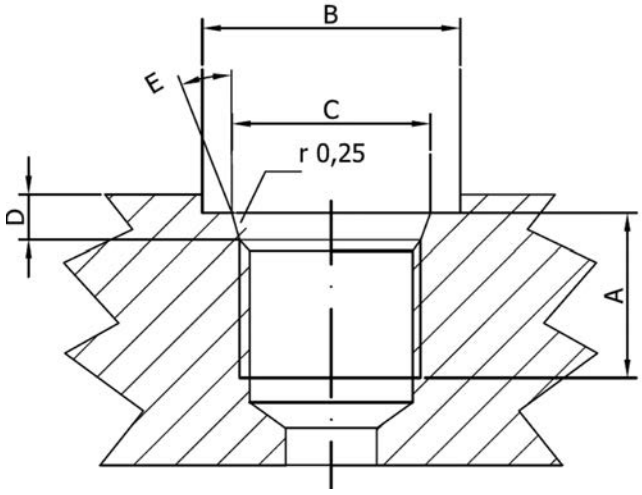

METRIC (ISO 262)					
Dimensions		M22x1,5 ISO 262		M27x2 ISO 262	
mm	in				
A		16	0,63	18	0,71
B		31,5	1,24	37,7	1,48

ORVAL HYDRAULIC

ORV PD120



ORVAL HYDRAULIC

SECTIONAL
VALVES

ORV-PD150

CE

TÜV International Certification
TÜV THÜRINGEN
CERT
AZAV
15 190 17185
TIC



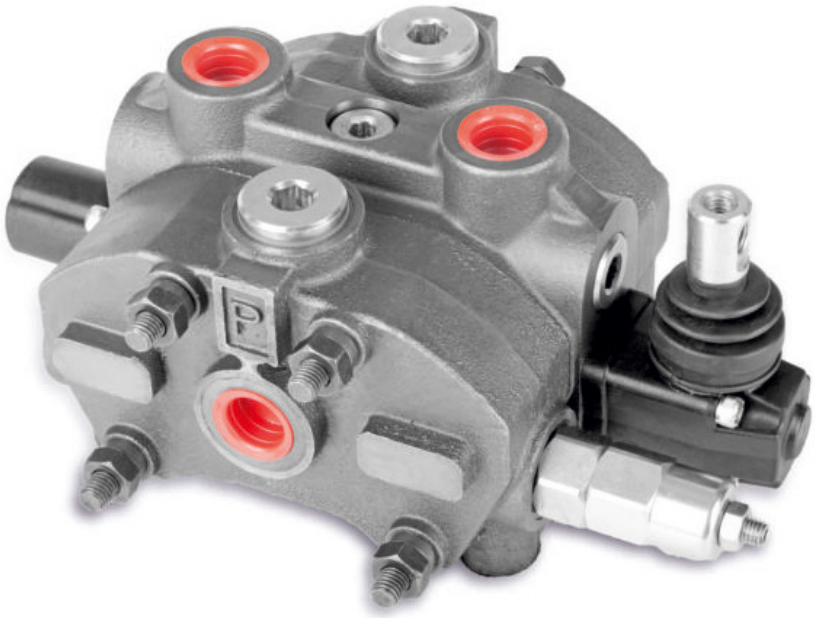

CONTENTS

Working Conditions	3
Dimensional Data	3
Hydraulic Circuit	3
Performance Data And Curve	3
Inlet Relief Options	3
Ordering Codes	3
Inlet Cover- Pump Side	3
Spool Options	3
Spool Positioners – Side of Return	3
Working Section Kit	3
Spool Positioners – Side of Lever Control	3
Spool Positioners – Side of Lever Control	3
Spool Positioners – Side of Lever Control	3
Spool Positioners – Side of Lever Control	3
Outlet Cover- Tank Side	3
Port Valves Options	3
Installation and Maintenance	3
Technical Data	3

Additional Informations

Note: This catalog shows the product in the most standard configurations. For Other Configurations, more detailed information or special request, Please contact Customer Service Dpt.

Warning!: All specifications of this catalog refer to the standard product at this date (01/2020). ORVAL, oriented to a continuous improvement, reserves the right to discontinue, modify or revise the specifications, without notice.

ORVAL IS NOT RESPONSIBLE FOR ANY DAMAGE CAUSED BY AN INCORRECT USE OF THE PRODUCT.

WORKING CONDITIONS

Nominal Flow Rating / Displacement	150 l/min	38 U.S.G.P.M
Maximum Working Pressure (Series Circuit)	210 Bar	3050 PSI
Maximum Working Pressure (Parallel Circuit)	315 Bar	4600 PSI
Max. Back Pressure	25 Bar	360 PSI
Oil Temperature with NBR Seals	-20 to 80 C°	-4 to 176 F °
with FPM (Viton) Seals	-20 to 100 C°	-4 to 212 F °
Oil Viscosity – Operating Range	From 10 to 75 mm2/s	From 10 to 75 cSt
Minumum / Maximum	10 / 400 mm2/s	10 / 400 cSt
Oil Filtration	≤30 µ	
Ambiant Temperature Range	-35 to 60 C°	-31 to 140 F °
Number Of Spools	1 to 12	
Internal Leakage (at 100 bar (1450 PSI), 40C° (110 F°), 46 cSt – A(B)–T)	3 cm3/min	0,18 in3/min
Max. Level Of Contamination	19/16 - ISO 4406	
Tie rod tightening torque	40 Nm	30 lbft

Not: This catalogue shows technical specifications measured with mineral oil of 46 mm2/s-46 cSt viscosity at 40 C° temparture.

Features

• Simple, compact and heavy duty designed sectional valves from 1 to 12 sections for open and closed center hydraulic systems.
• Optionaly Carry-Over port only tandem circuit.
• Fitted with a main pressure relief valve.
• Interchangeable spool diametre is 20 mm – 0,79 in.
• Available manual, pneumatic, hydraulic and electro-pneumatic spool control kits.

DIMENSIONAL DATA

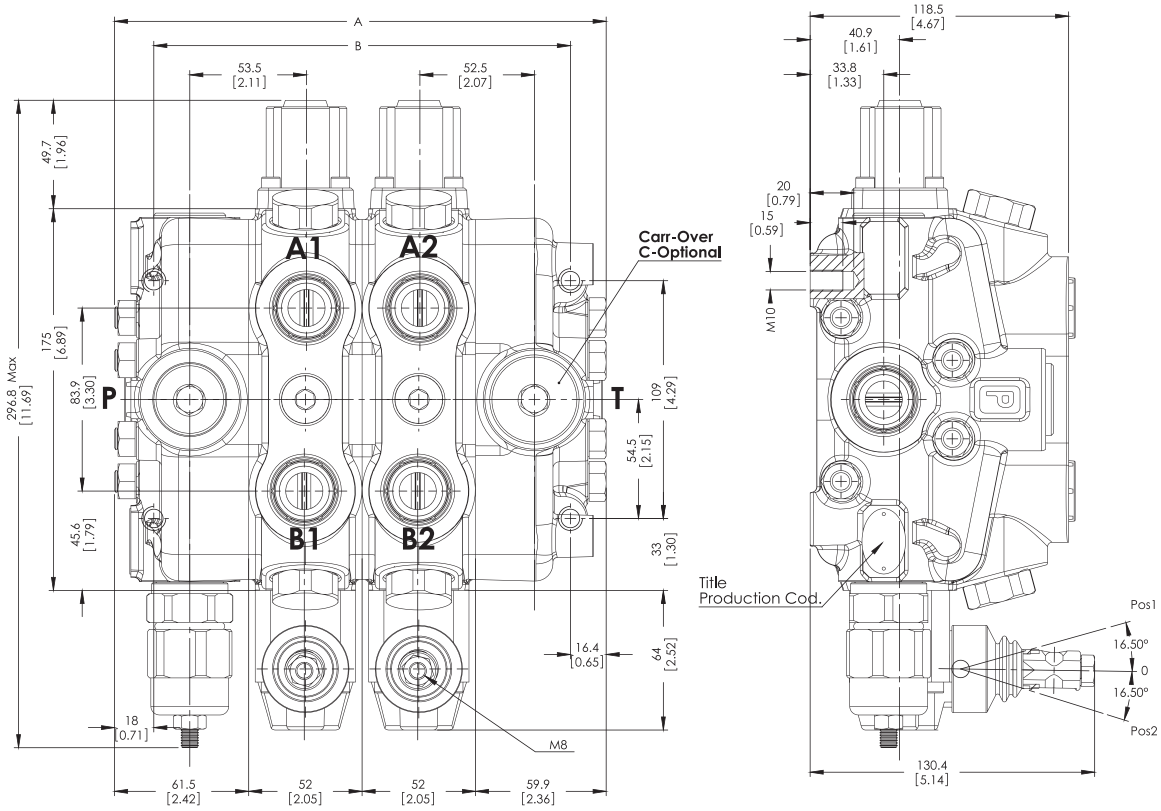

TYPE	A		B		Weight	
	mm	in	mm	in	Kg	lb
ORV- PD120-1P	160	6.30	73	2.87	13.46	29.67
ORV- PD120-2P	212.5	8.37	125.5	4.94	19.60	43.21
ORV- PD120-3P	265	10.43	178	7.00	25.74	56.75
ORV- PD120-4P	317.5	12.50	230.5	9.07	31.88	70.29
ORV- PD120-5P	370	14.56	283	11.14	38.02	83.83
ORV- PD120-6P	422.5	16.63	335.5	13.20	44.16	97.37
ORV- PD120-7P	475	18.50	388	14.96	50.30	110.91
ORV- PD120-8P	527.5	20.76	440.5	17.34	56.44	124.45
ORV- PD120-9P	580	22.83	493	19.41	62.58	137.99
ORV- PD120-10P	632.5	24.90	545.5	21.48	68.72	151.53
ORV- PD120-11P	685	26.97	598	23.54	74.86	165.07
ORV- PD120-12P	737.5	29.03	650.5	25.61	81.00	178.61

STANDARD THREADS

PORT	BSP (Iso 228) 3/4" Series	1"Series	UN-UNF (Iso 11926-1)
P Inlet	G 3/4	G 1	1 5/16 -12 UN
A-B Ports	G 3/4	G 1	11/16 - 12 UN
T Outlet	G 1	G 1	1 5/16 -12 UN
Pneumatic	G 1/4	G 1/4	NPTF 1/8 - 27
Carry-Over	G 3/8	G 3/8	G 3/8

HYDRAULIC CIRCUIT

Parallel

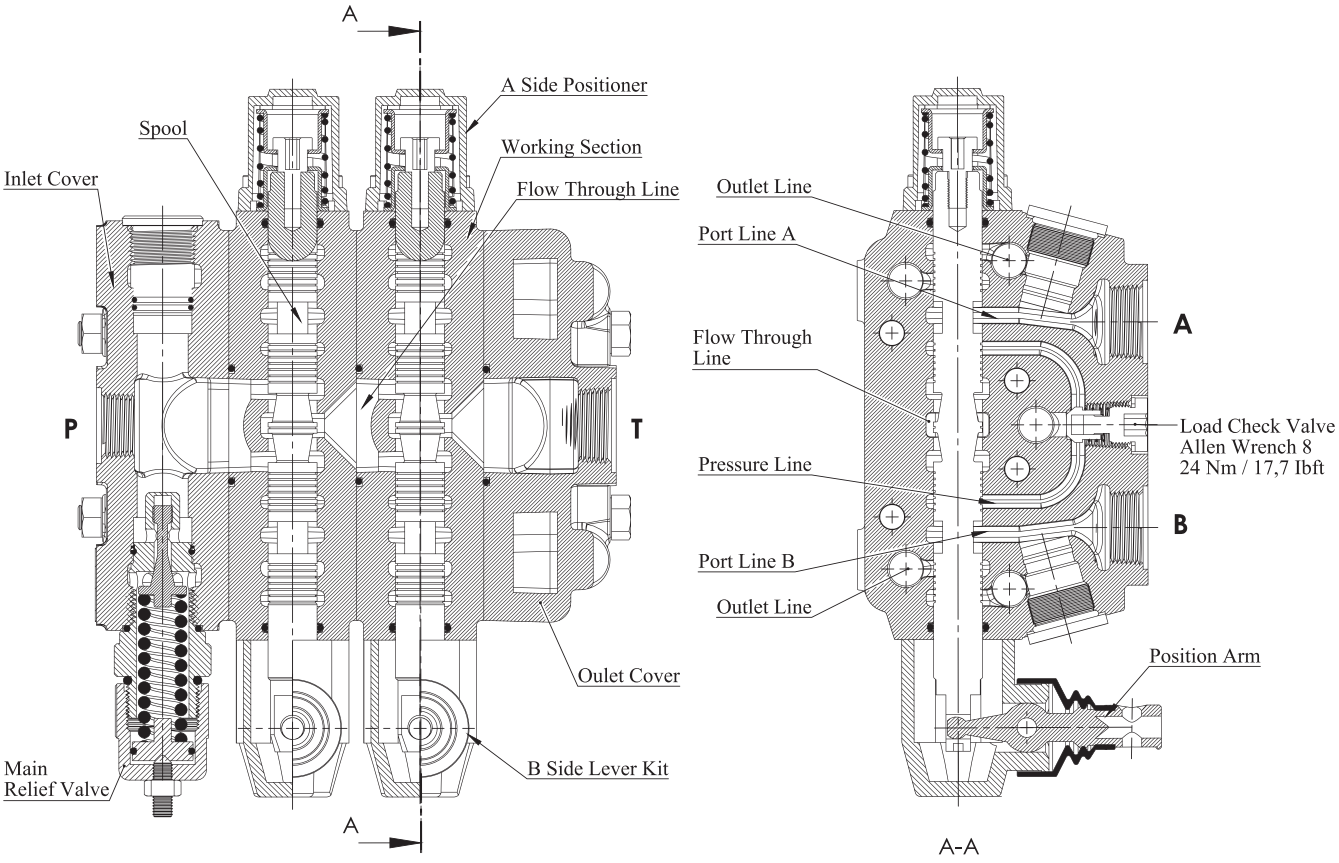

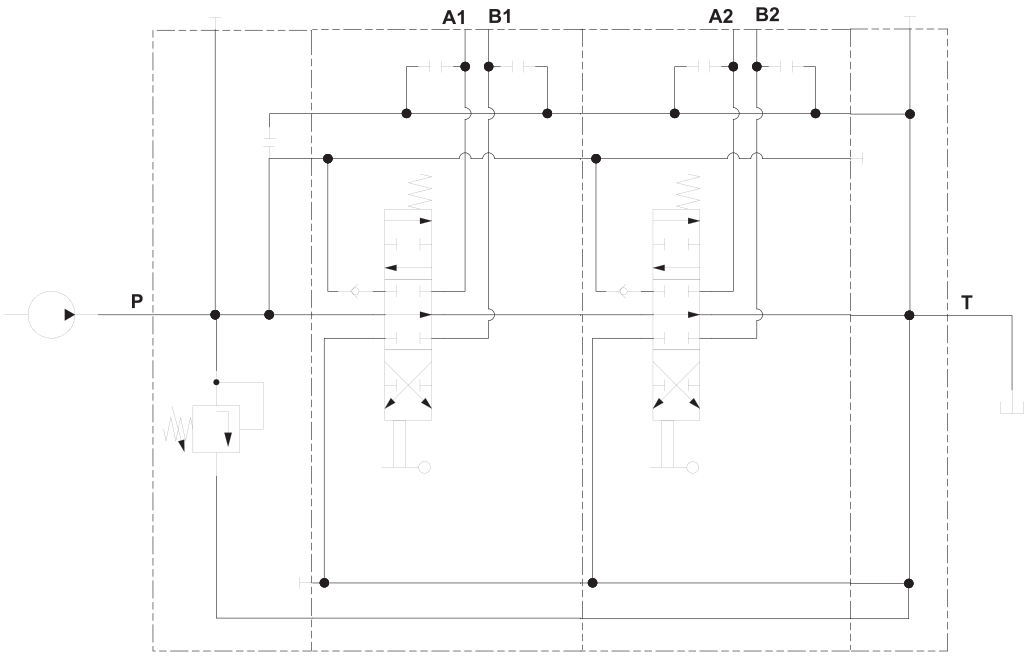

Code: ORV PD150-2P (SD(LA)-SMR2-125-PP)/P-1A-STL-SR/ P-1A-STL-SR/ SO-PT1 / SGT

HYDRAULIC CIRCUIT

Inlet Cover – Pump Side

SD - Side inlet with direct pressure relief valve
TD - Top inlet with direct pressure relief valve
SP - Side inlet with relief valve blanking plug

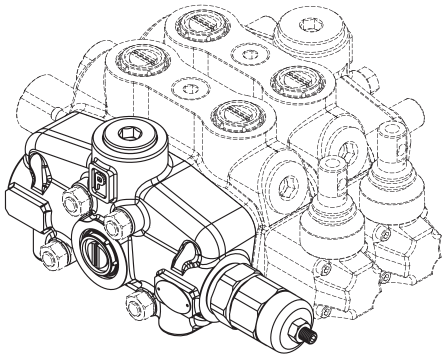

Type = SD

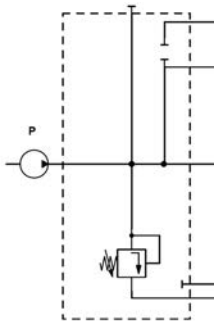

Type = TD

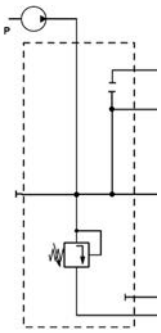

Type = SP

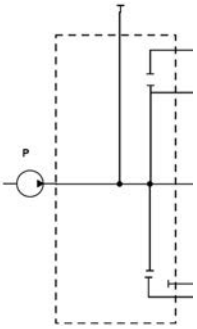

Working Sections

P – Parallel

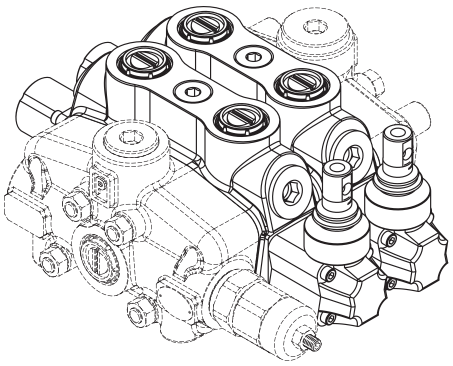

Type = P

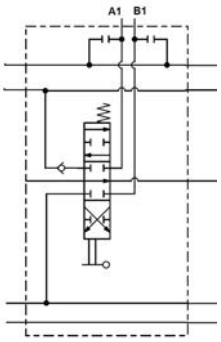

HYDRAULIC CIRCUIT

Outlet Cover (Tank Side)

SO - Side outlet
TO - Top outlet
TCO - Top outlet with carry-over
TC - Top outlet with closed centre

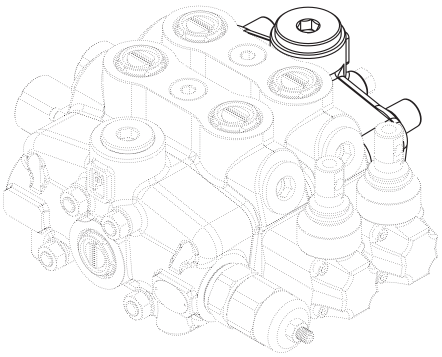

Type = SO

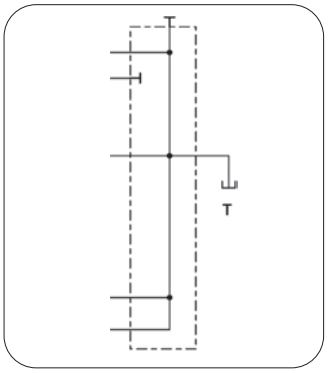

Type = TO

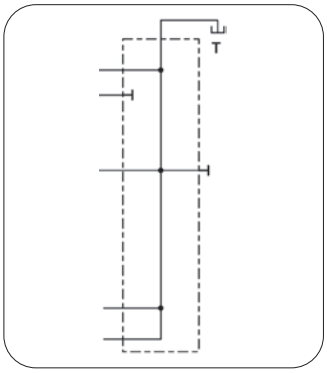

Type = TCO

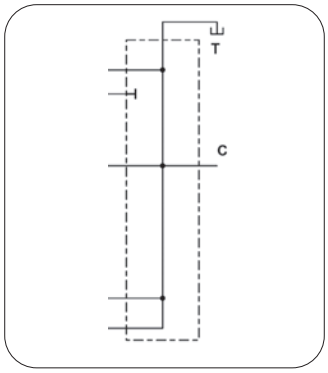

Type = TC

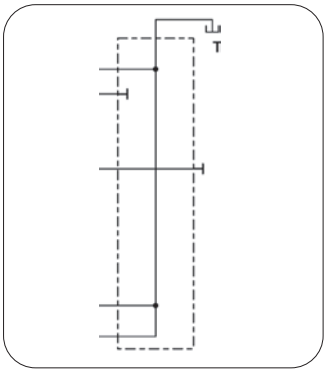

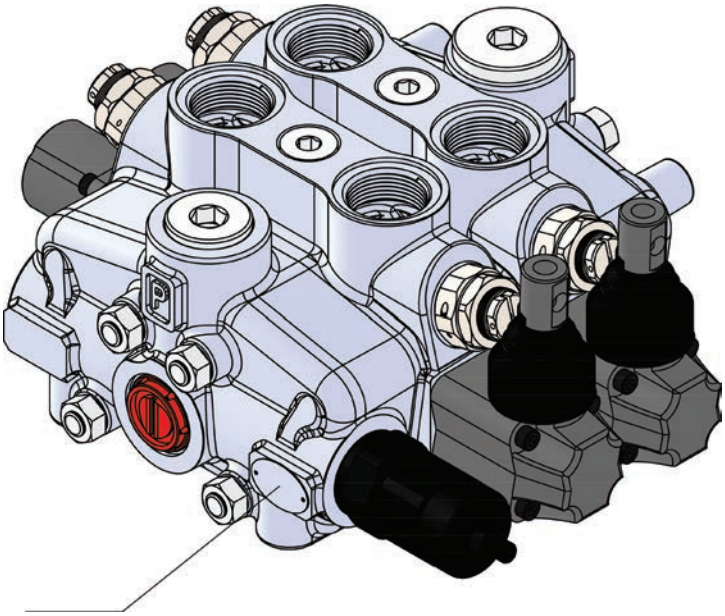

HYDRAULIC CIRCUIT

Standard Configurations With Top Inlet And Outlet Ports - RH (Right Inlet)

A symetrical body allows the reverse assembly of spool.

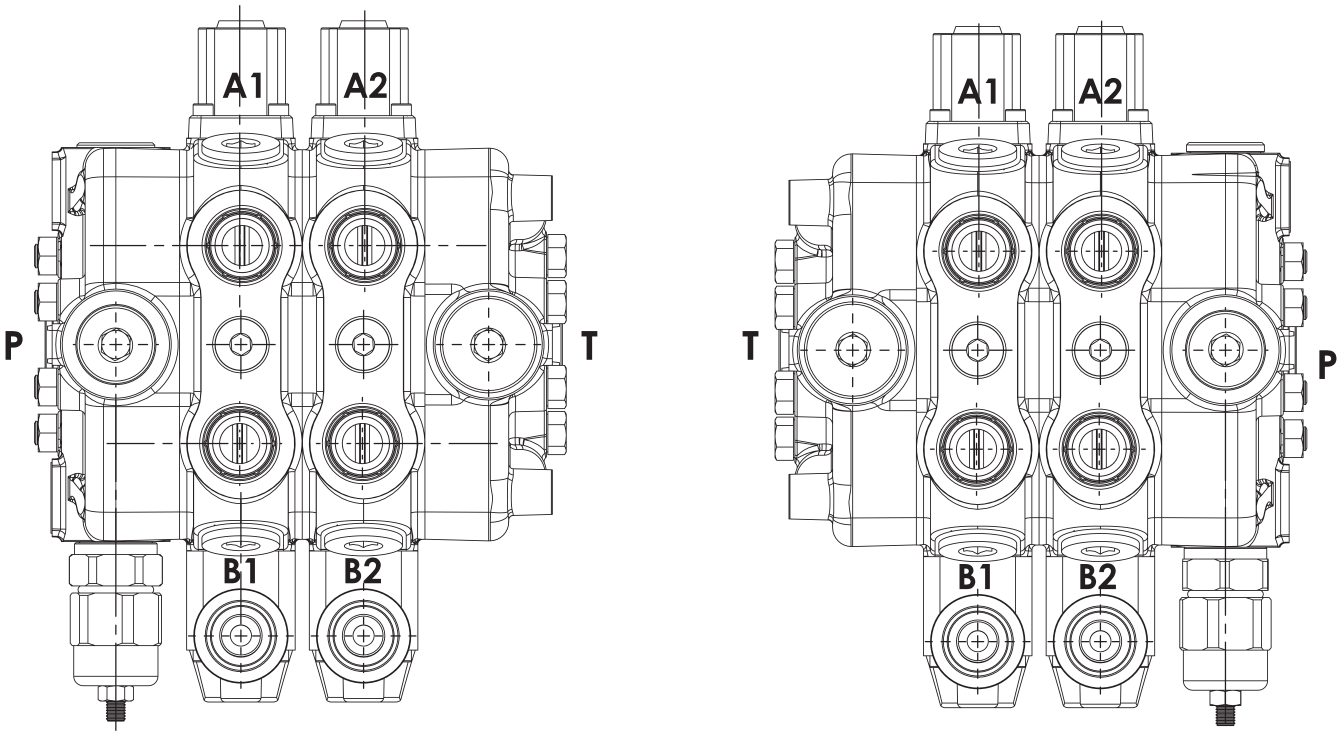

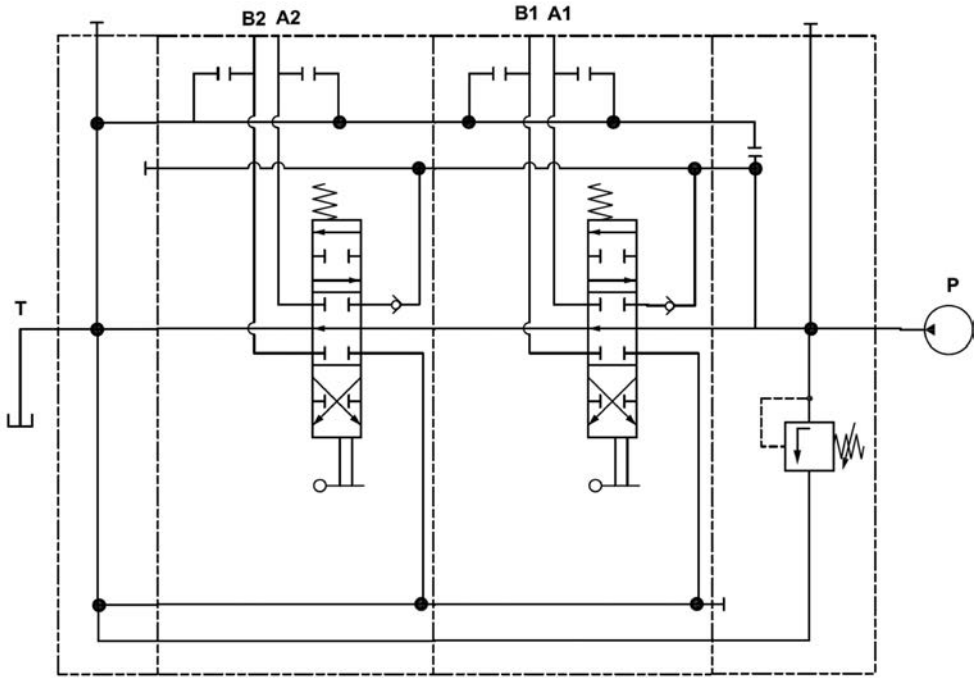

Code: ORV PD150-2P (SD(RA)-SMR2-125-PP)/P-1A-STL-SR/ P-1A-STL-SR/ SO-PT1 /

PERFORMANCE DATA AND CURVE

Open Center - Pressure Drop (P-T)

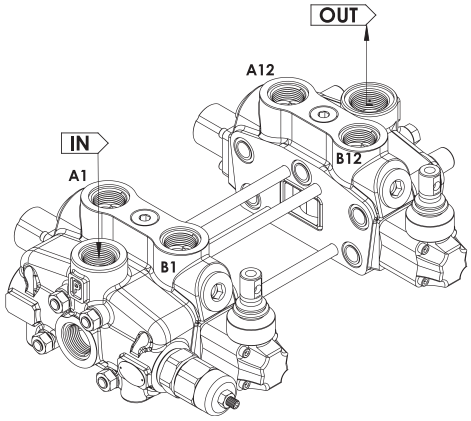

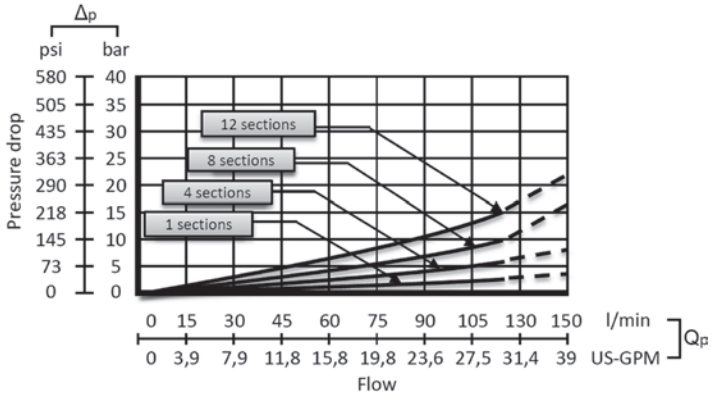

Inlet to Work Port - Pressure Drop (P-A/B)

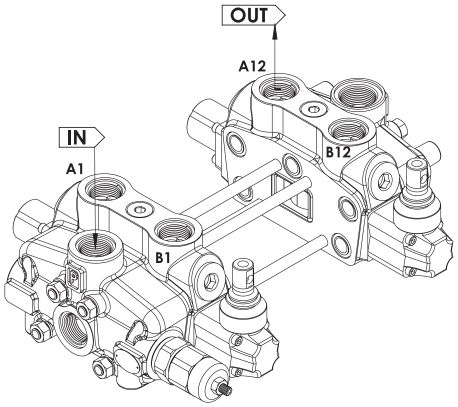

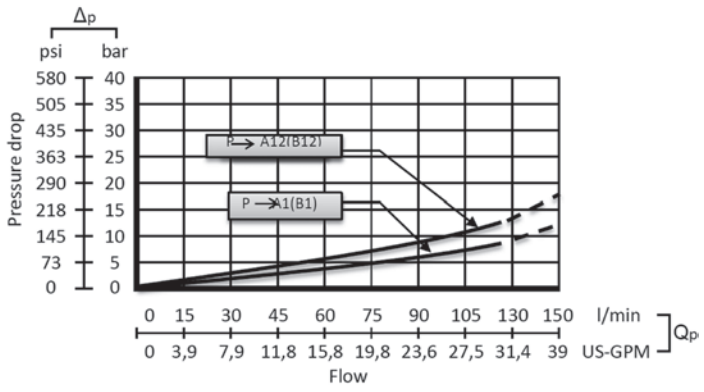

Work Port to Outlet - Pressure Drop (A/B-T)

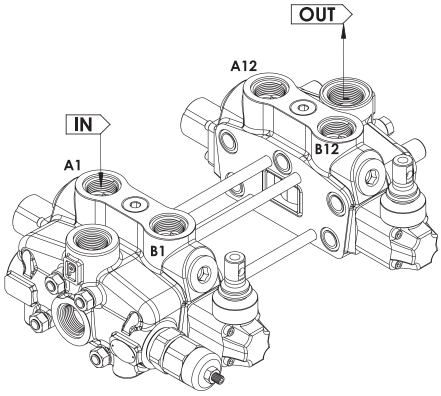

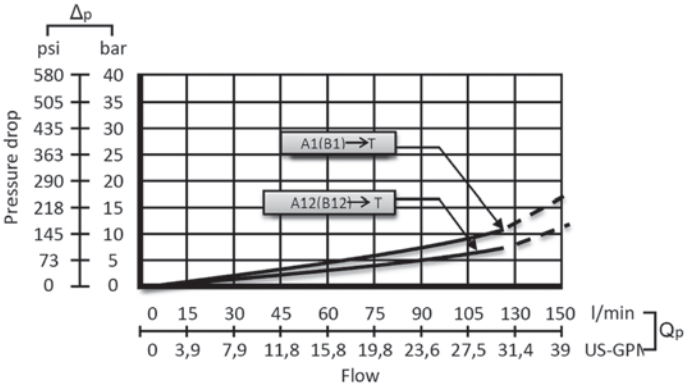

INLET RELIEF OPTIONS

Direct Pressure Relief Valve

Code:

SMR2 – 125

- **Pressure Setting Bar in (Standard 125 bar)**
- **Standard Main Relief Spring Type -2**

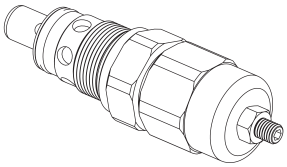

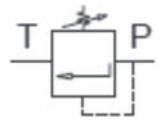

Performance Data

Spring Type Number: 1
Setting= 80 Bar -Range=63-125 Bar

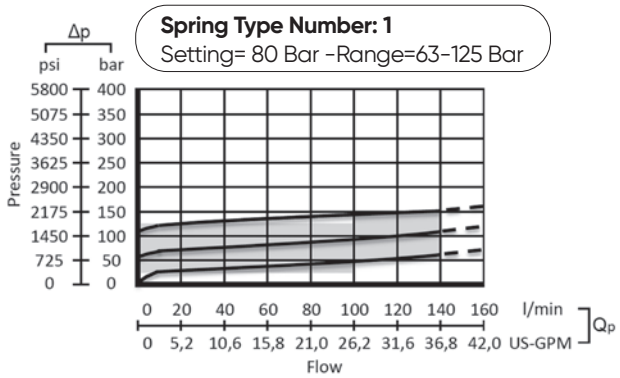

Spring Type Number: 2
Setting= 125 Bar -Range=100-165 Bar

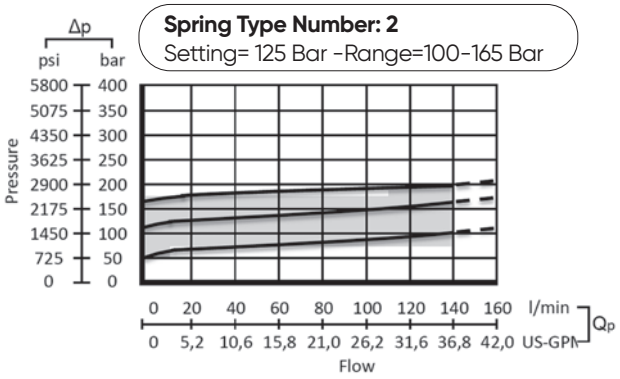

Spring Type Number: 3
Setting= 175 Bar -Range=125-250 Bar

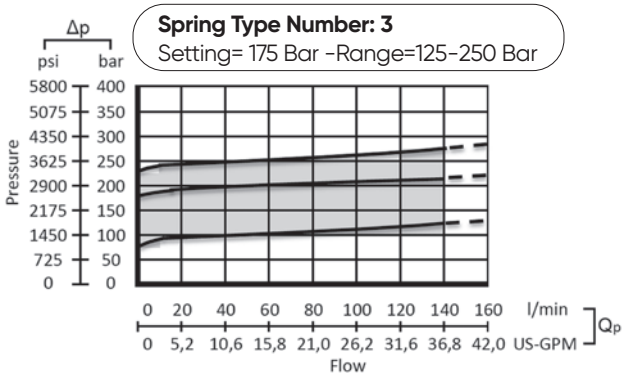

Spring Type Number: 4
Setting= 220 Bar -Range=200-315 Bar

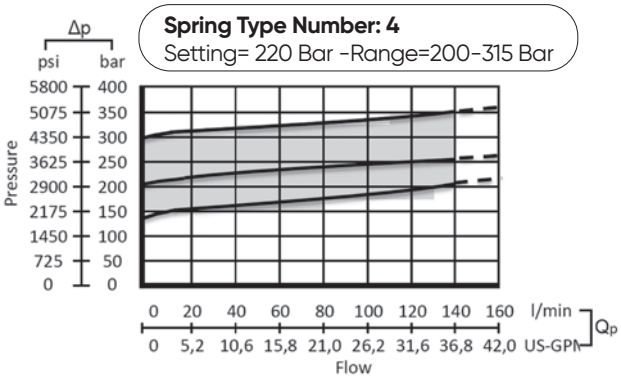

Adjustment Type on Valve

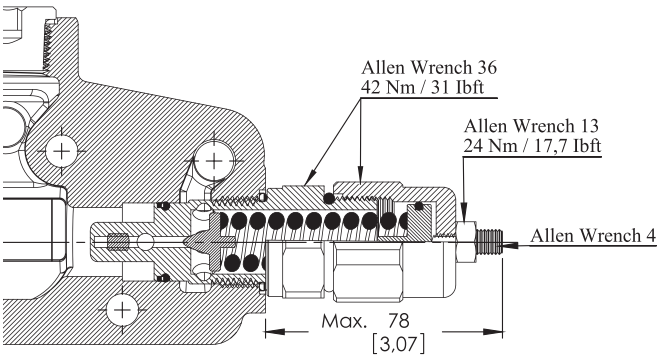

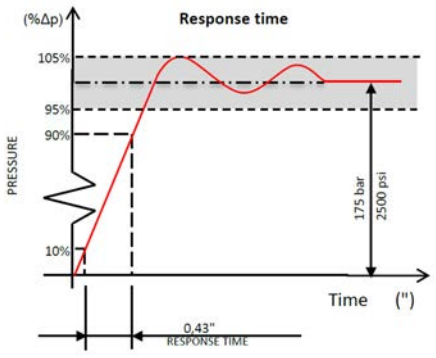

INLET RELIEF OPTIONS

Direct Pressure Relief Valve

Kit No: **PAC**

Sectional Appearance

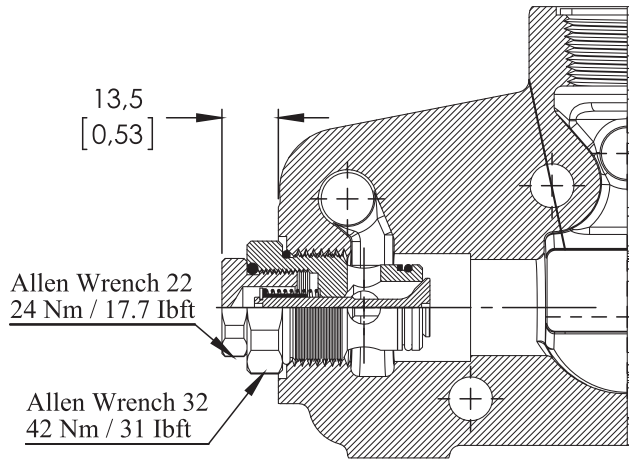

Diagram

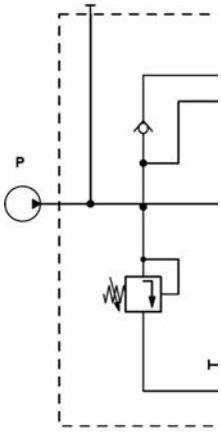

Performance Data

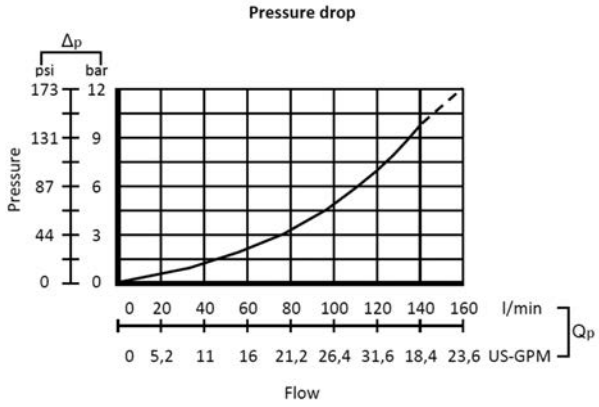

Relief Blanking Plug - SP

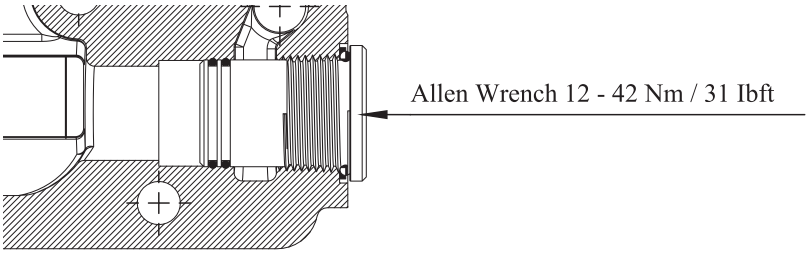

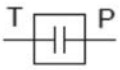

ORDERING CODES

Order Example

2.2 2.4 3.2

ORV PD150-2P (SD-SMR2-125-PP)/P-1A- STL- YAC-SR / P-1A-STL-150P / SO-PT1-CO / SGT

1 1.2 1.4 2.1 2.3 2.6 3.1 3.3

Base Code "0" — 1 st Section — Following Section — Output Section

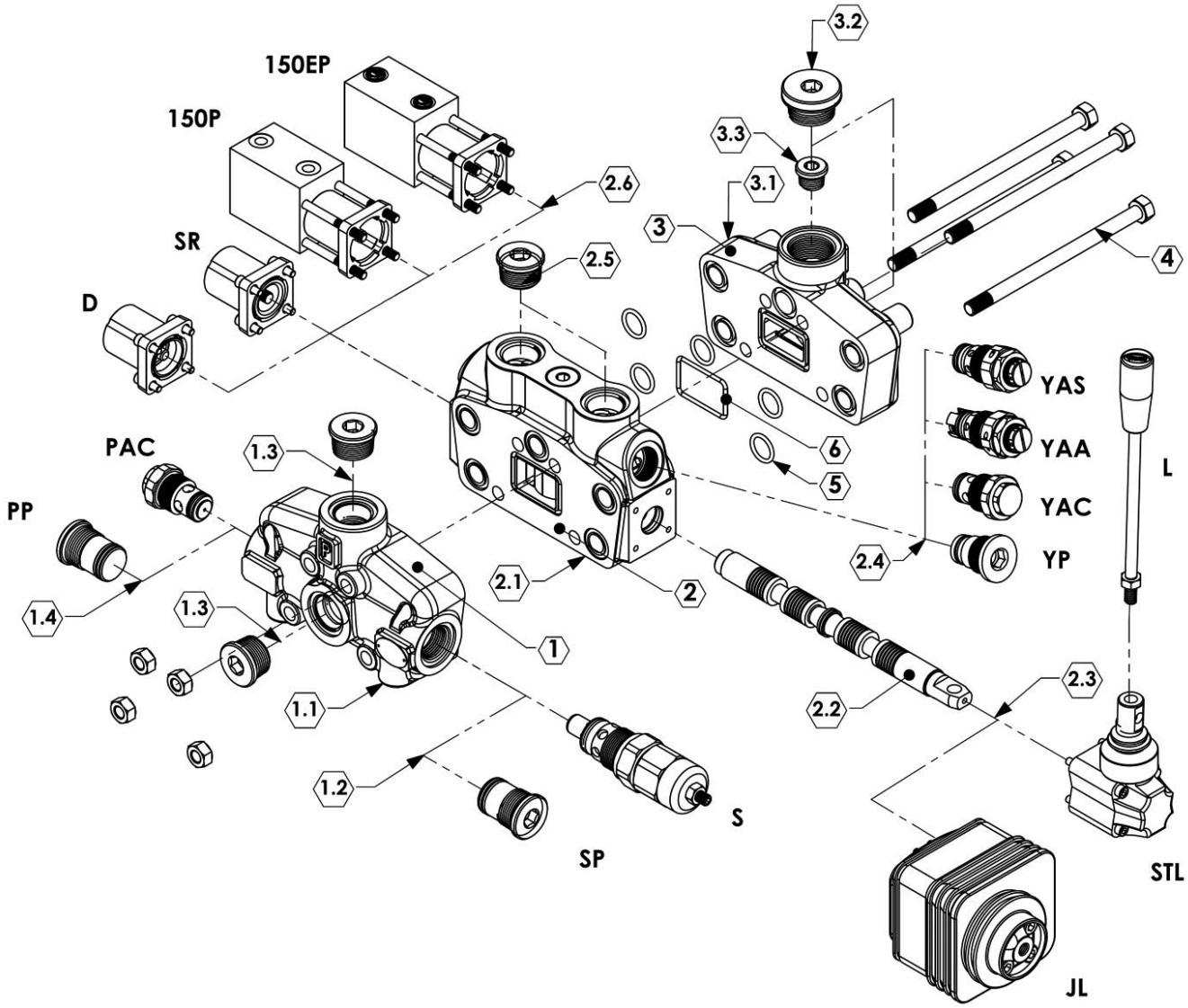

ORDERING CODES

1- Inlet Section

ORV PD150-2P PD150 = Valve Type-(PD)- Sectional
(150) - Max. Flow Rate
2P =Sections Quantity
SD = Side inlet with direct pressure relief valve (1SD150100)
TD = Top inlet with direct pressure relief valve (1TD150100)
SP = Side inlet with relief valve blanking plug (1SP150100)

2- Working Section

P = Parallel (2P150100)

3- Output Section

SO = Side outlet (3SO150100)
TO = Top outlet (3TO150100)
TCO = Top outlet with carry-over (3TCO150100)
TC = Top outlet with closed centre (3TC150100)

4- Assembling Kit

Tie rod kit for 1 section valve - (4TRK1150100)
Tie rod kit for 2 section valve - (4TRK2150100)
Tie rod kit for 3 section valve - (4TRK3150100)
Tie rod kit for 4 section valve - (4TRK4150100)
Tie rod kit for 5 section valve - (4TRK5150100)
Tie rod kit for 6 section valve - (4TRK6150100)
Tie rod kit for 7 section valve - (4TRK7150100)
Tie rod kit for 8 section valve - (4TRK8150100)
Tie rod kit for 9 section valve - (4TRK9150100)
Tie rod kit for 10 section valve - (4TRK10150100)
Tie rod kit for 11 section valve - (4TRK11150100)
Tie rod kit for 12 section valve - (4TRK12150100)

5-6- O_Ring Kit

5. -17.00x2.65 NBR 70 SH O-Ring seal (3 Qty.) (5MK150100)
6. -34.60x2.62 NBR 70 SH O-Ring seal (1 Qty.) (6MK150100)

1.*-Inlet Options

1.1 Inlet Cover
Body = Standard (11BS150100)
1.2 Inlet Relief
SMR1-080 – (12SMR1150080)–Range 63-125 bar
Setting 80 bar
SMR2-125 – (12SMR2150120)– Range 100-160 bar
Setting 125 bar
SMR3-175 – (12SMR3150175)– Range 125-250 bar
Setting 175 bar
SMR4-220 – (12SMR4150220)–Range 200-315 bar
Setting 220 bar
1.3 Ports Plug
PA1 = G3/4 Top and side input - (13PA1150100)
PA2= G1 Top and side input –(13PA2150100)
1.4 Inlet Valve
PAC =Inlet anti-cavitation valve –(14PAC150100)
PP(SP) = Relief valve blanking plug –(14PSP150100)

2.*- Working Options

2.1 Working Section
PA = Without ports valve prearrangement, with parallel circuit - Body (21BSPA150100)
2.2 Spool Options
1A -(22SS150110) – 3 Positions ,Double acting
2A -(22SS150120) – 3 Positions ,Double acting
A to tank B Blocked
3A -(22SS150130) – 3 Positions ,Double acting
B to tank A blocked
4A -(22SS150140) – 3 Positions ,Double acting
A and B tank
5A -(22SS150150) – 3 Positions ,Single acting on
A (A to tank)
6A -(22SS150160) – 3 Positions ,Single acting on
B (B to tank)
2.3 Lever Options
L = Standard HandLever (L=120mmxM10) - (7L040100)
JL =Joystick lever for two sections operation (5JL 080100)
STL = Standard Lever –(23STL150100)
HL = Remote Cable Kit – (80HL80100)
2.4 Port Relief Valves
Anti-Shock Valve
YAS (T1-50) – (24YAC150050)–Range 35-70 bar
Setting 50 bar
YAS (T1-100) – (24YAC150100)–Range 63-220 bar
Setting 100 bar
YAS (T1-200) – (24YAC150200)–Range 180-350 bar
Setting 200 bar
Anti-Shock and Anti-Cavitation Valve
YAA (T1-63) – (24YAA150063)–Range 35-70 bar
Setting 50 bar
YAA (T1-100) – (24YAA150100)–Range 63-220 bar
Setting 100 bar
YAA (T1-200) – (24YAA150200)–Range 180-350 bar
Setting 200 bar
YAC - Anti Cavitation– (24YAS150100)
YP- A and B ports valve blanking plug (24YP150100)
DST-A and B ports valve blanking plugs with
connection to tank–(24DST150100)
2.5 Ports Plug Options
PL1 =Plug for single action spool for 2A-3A, G3/4
(25PL1150100)
PL2 =Plug for single action spool for 2A-3A, G1
(25PL2150100)
2.6 Spool Positioners
SR=Spring Return in neutral position – (26SR150100)
D =Detent in position 1, neutral and 2 -(26D150100)
100P=ON/OFF Pneumatic – (2645P150100)
100EP=12 VDC ON/OFF electro-pneumatic
(26150EP150112)
100EH= 12 VDC/24 VDC ON/OFF electro-hydraulic
(36150EH100112)

3.*- Working Options

3.1 Working Section
Body = Standard (31BS150100)
3.2 Output Plug
PT1 =G1 Top and Side output (32PT1150100)
3.3 Circuits Options
CO =G1/8 Carry–Over Connector (33CO150100)

INLET COVER- PUMP SIDE

LH Inlet Valve Options

Type No: **SD**

Sectional Appearance

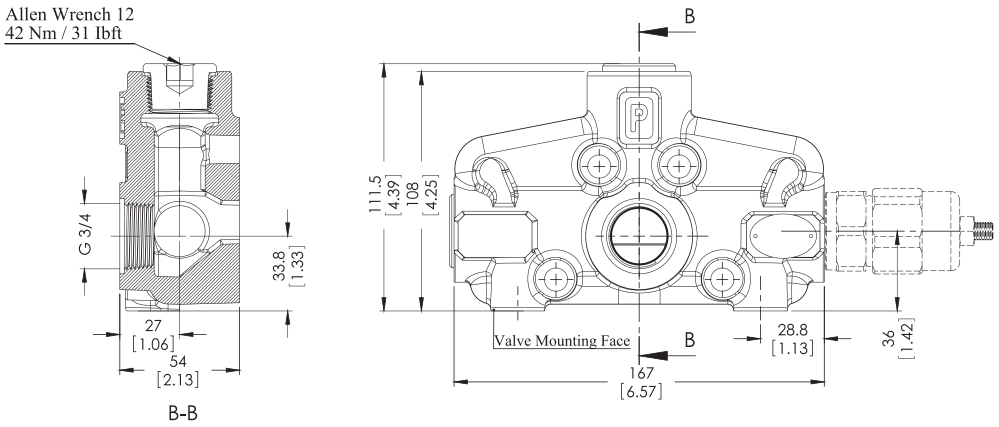

Type No: **TD**

Sectional Appearance

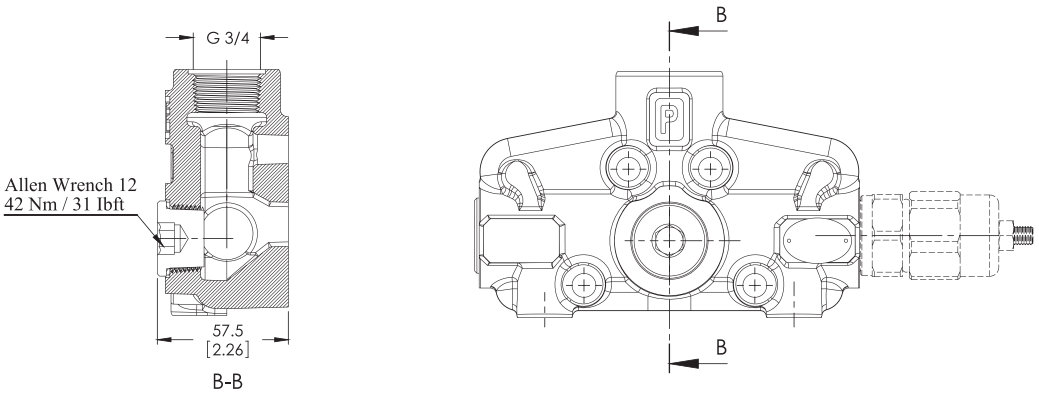

Hydraulic Diagram

Type No: **SD**

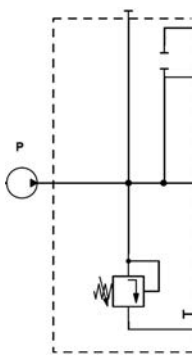

Type No: **TD**

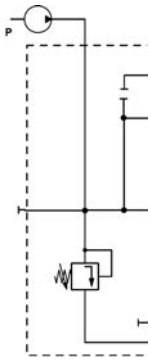

INLET COVER- PUMP SIDE

RH Inlet Valve Options

Type No: **RA**

Sectional Appearance

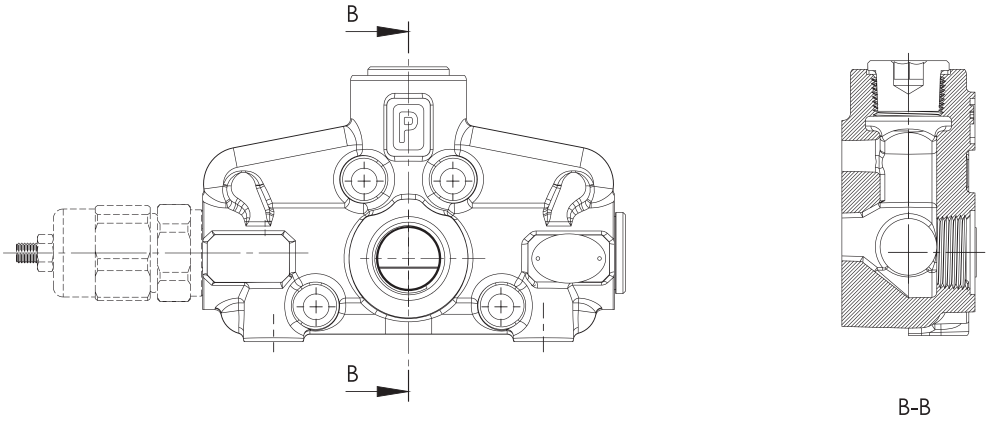

Type No: **RB**

Sectional Appearance

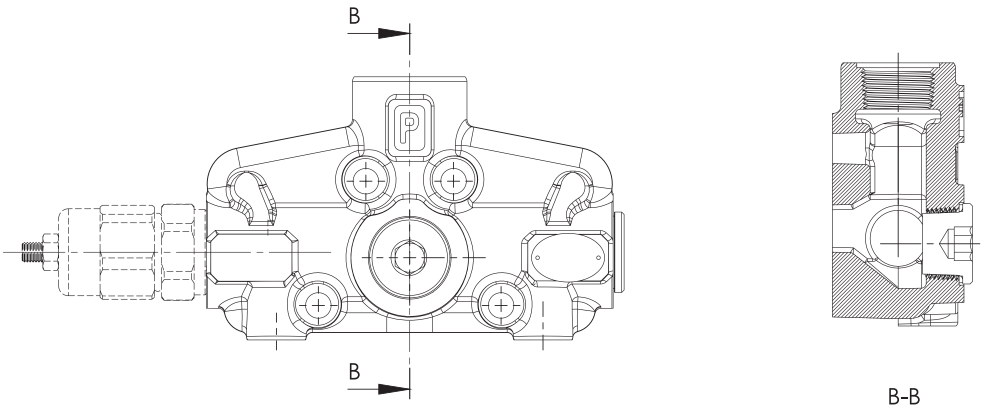

Hydraulic Diagram

Type No: **RA**

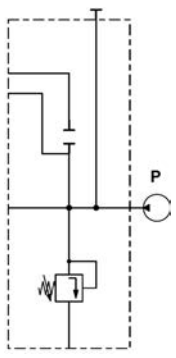

Type No: **RB**

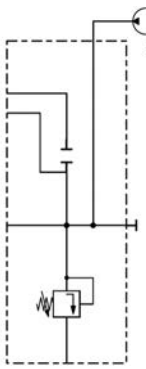

SPOOL OPTIONS

Spool Type - 1A

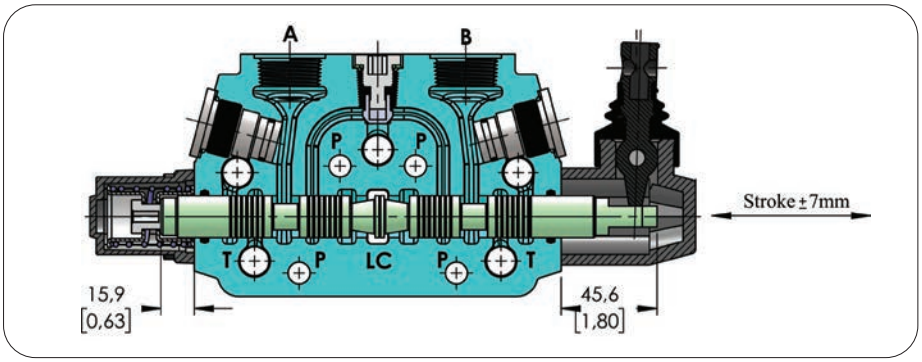

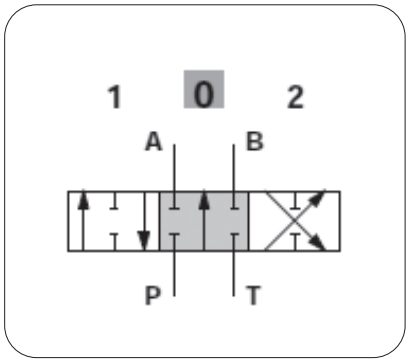

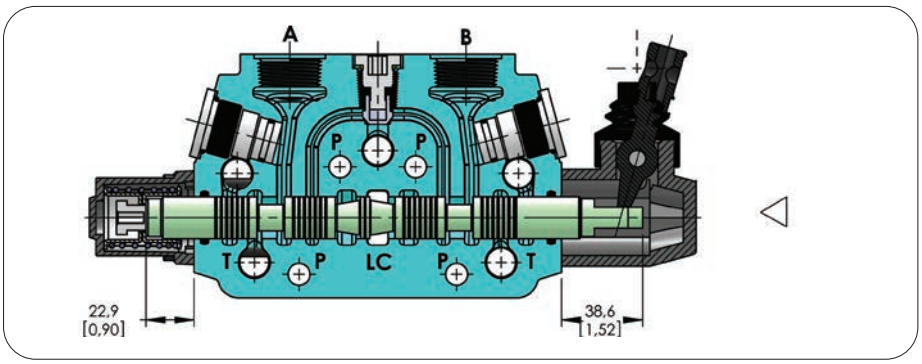

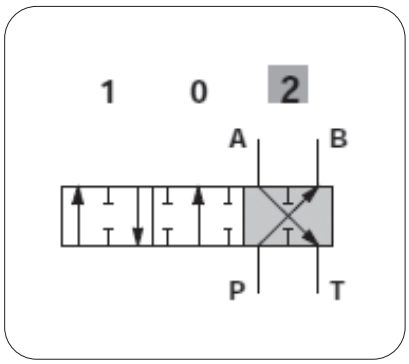

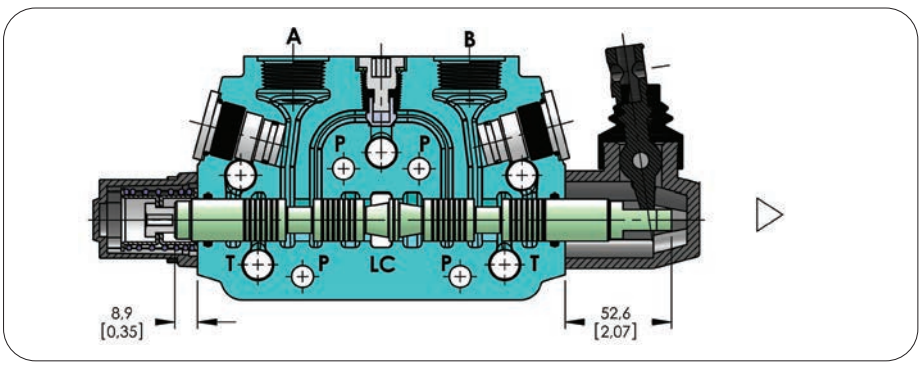

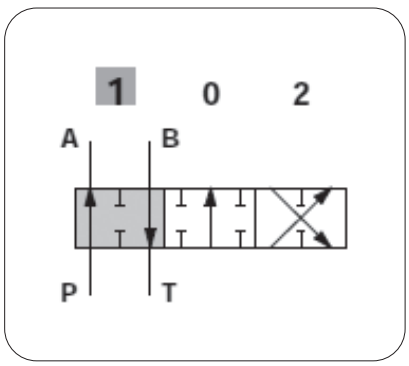

Performance Curve And Data

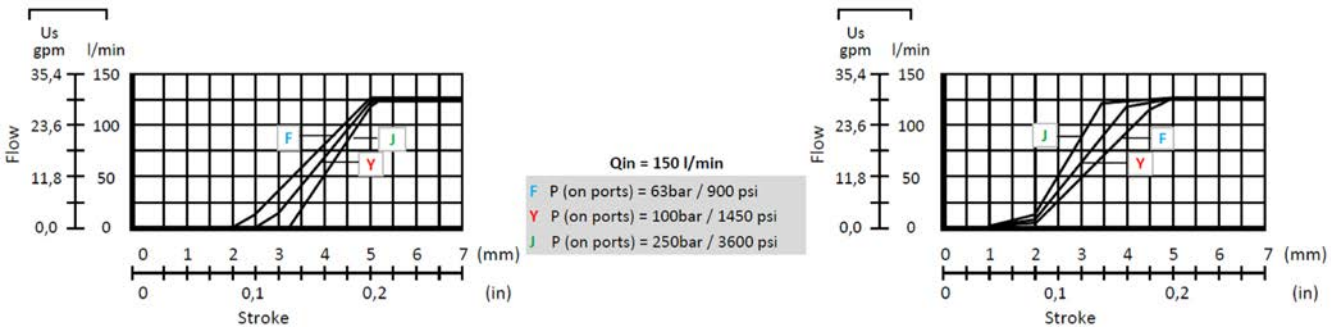

SPOOL OPTIONS

Spool Type - 2A

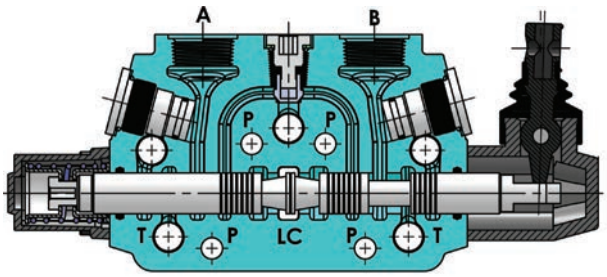

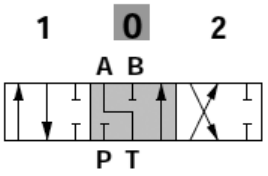

Spool Type - 3A

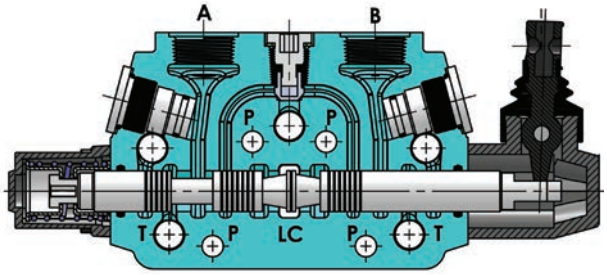

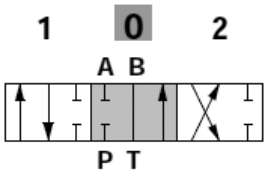

Spool Type - 4A

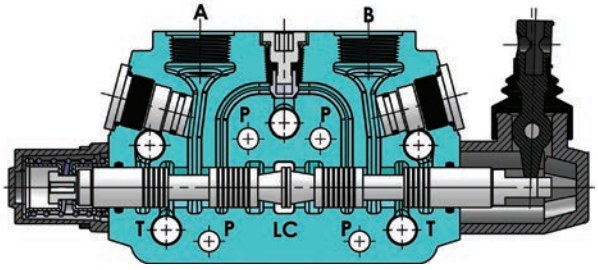

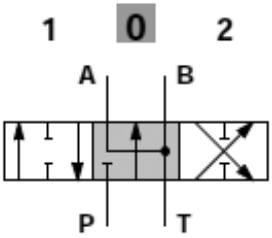

Spool Type - 5A

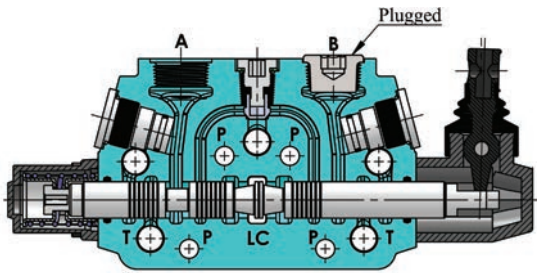

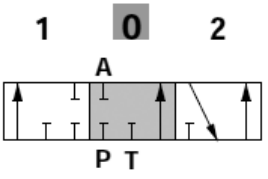

"B" port plugged

Spool Type - 6A

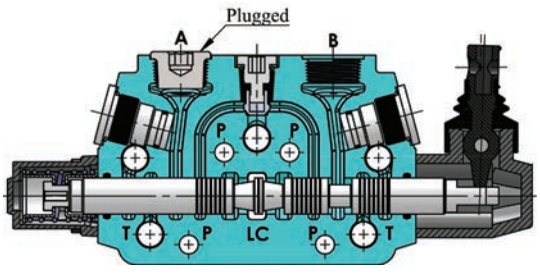

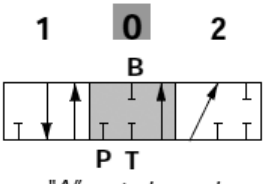

"A" port plugged

SPOOL POSITIONERS – SIDE OF RETURN

With Spring Return in Neutral Position

Kit No: **SR**

Sectional Appearance

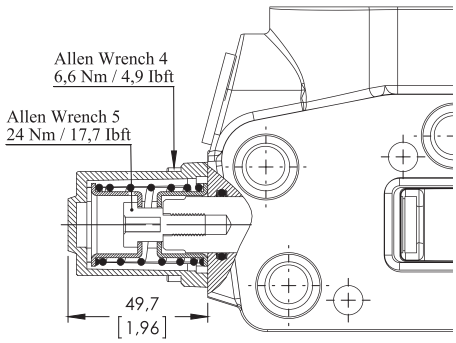

Diagram



With Detent

Kit No: **D**

Sectional Appearance

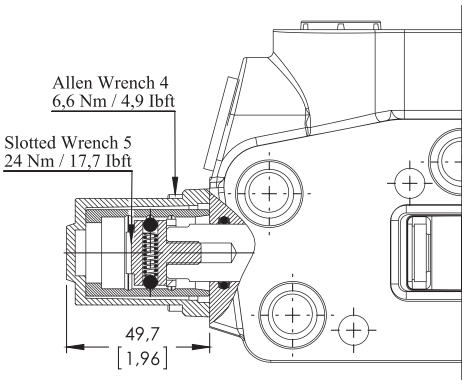

Diagram



Force - stroke diagram

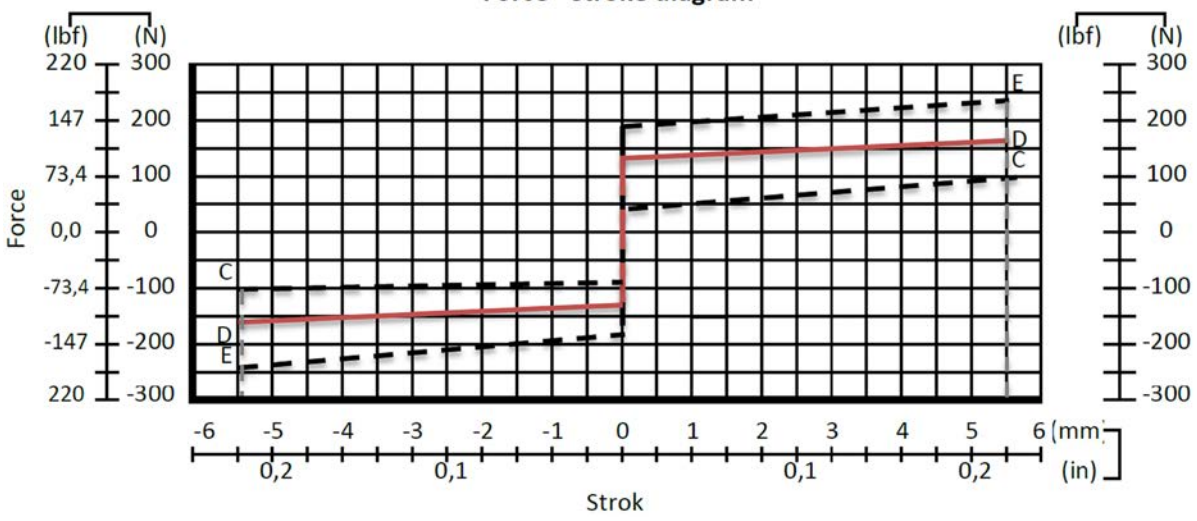

SPOOL POSITIONERS – SIDE OF RETURN

ON/OFF Pneumatic Control

Kit No: **150P**

Sectional Appearance

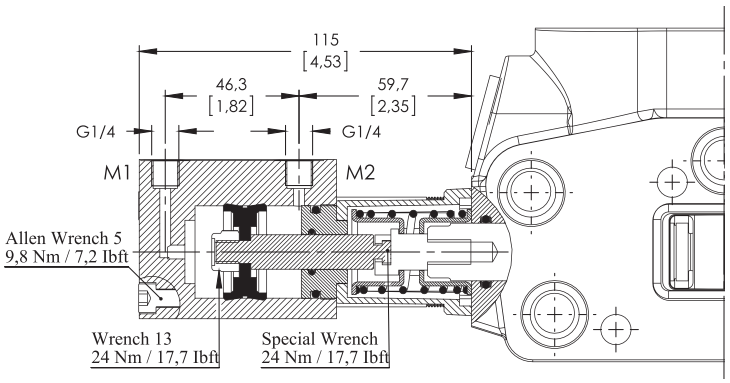

Diagram

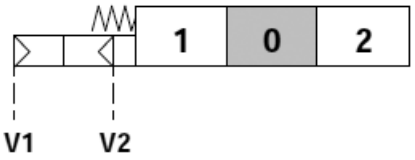

Operating Features

Pilot Pressure .....: 6 Bar (Max. 10) / 87 Psi (Max. 145)

ON/OFF Electro-Pneumatic Control

Kit No: **150EP**

Sectional Appearance

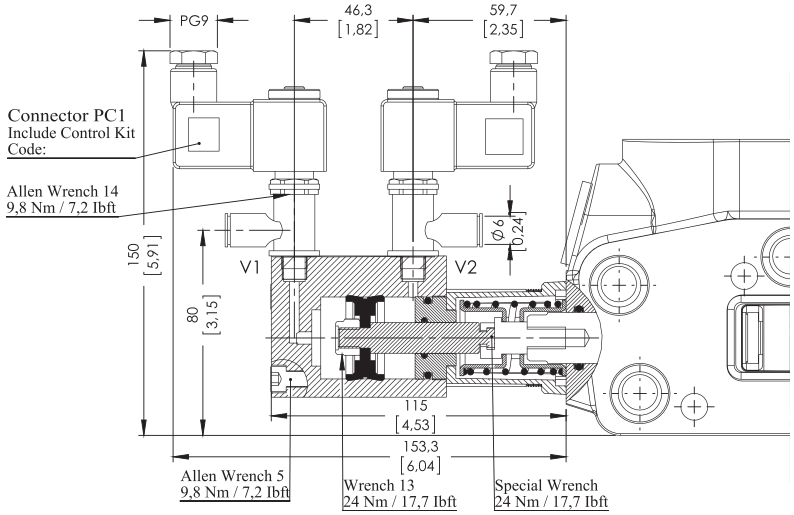

Diagram

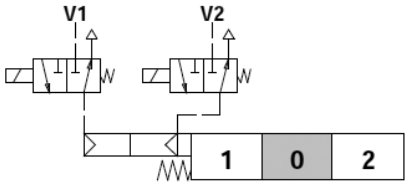

Operating Features

Pilot Pressure .....: 6 Bar (Max. 10) / 87 Psi (Max. 145)

Selenoid Operating Features

Nominal Voltage.....: 12VDC / 24 VDC

Power Rating.....: 6 W

SPOOL POSITIONERS – SIDE OF RETURN

ON/OFF Electro - Hydraulic Control

Kit No: **150EH**

Sectional Appearance

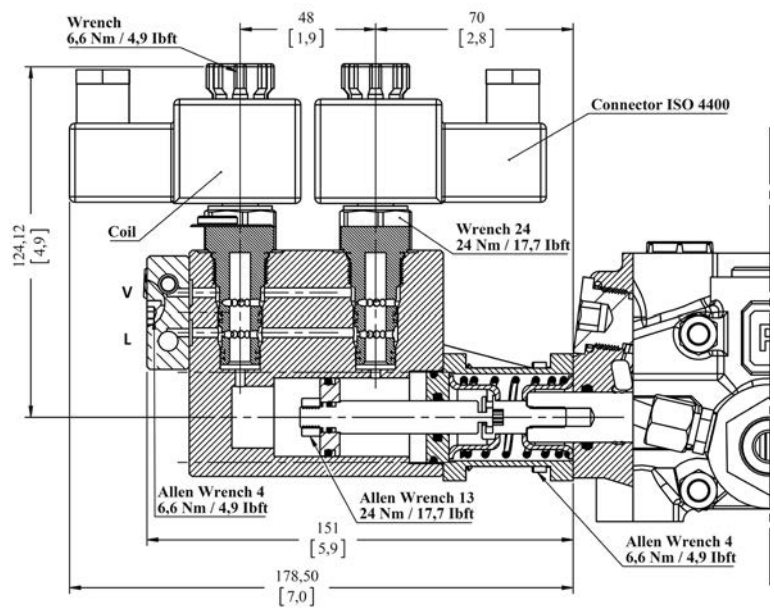

Diagram

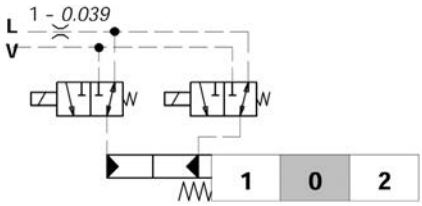

Operating Features

Pilot Pressure .....: 10 Bar / 145 Psi
: 50 Bar / 725 Psi
Max back pressure on drain L....:25 Bar / 360 Psi

Selenoid Operating Features

Coil Connection.....: ISO 4400
Nominal voltage.....: 12 VDC / 24 VDC
Power rating.....: 21 W
Duty cycle.....: %100
Protection type.....: IP 65
Nominal voltage tolerance.....: ±10
Max temperatures.....: 100 C°
Stroke.....: ±5,5 mm

ORDER CODE

External Pilot Collector
COL 11 - 10COL1001 – Kit For Section 1
COL 12 - 10COL1001 – Kit For Section 2
COL 13 - 10COL1001 – Kit For Section 3
COL 14 - 10COL1001 – Kit For Section 4
COL 15 - 10COL1001 – Kit For Section 5
COL 16 - 10COL1001 – Kit For Section 6
COL 17 - 10COL1001 – Kit For Section 7
COL 18 - 10COL1001 – Kit For Section 8

Standard Pilot Collector
COL 21 - 10COL2001 – Kit For Section 1
COL 22 - 10COL2001 – Kit For Section 2
COL 23 - 10COL2001 – Kit For Section 3
COL 24 - 10COL2001 – Kit For Section 4
COL 25 - 10COL2001 – Kit For Section 5
COL 26 - 10COL2001 – Kit For Section 6
COL 27 - 10COL2001 – Kit For Section 7
COL 28 - 10COL2001 – Kit For Section 8

SPOOL POSITIONERS – SIDE OF RETURN

ON/OFF Electro - Hydraulic Control Connections

Connection Type 1: **Collector kit for external pilot and drain**

Sectional Appearance

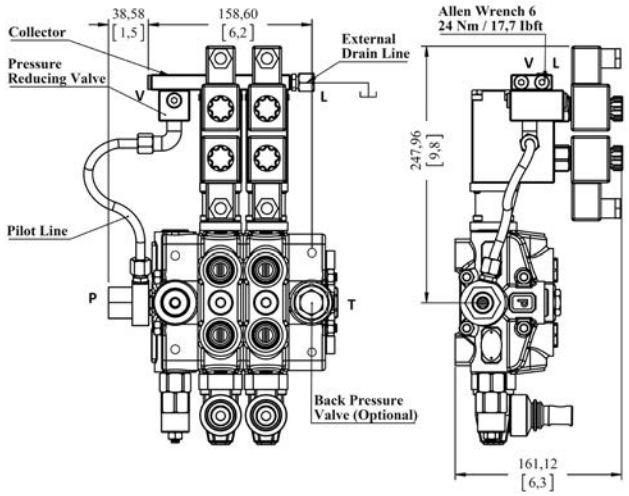

Diagram

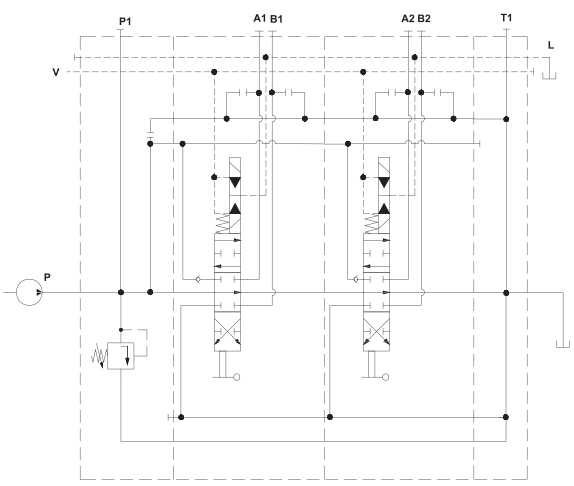

Operating Features
External Pressure Reducing Valve .....: 20 Bar / 290 Psi (For V line)
Code= ORV PD150-2P (SD(LA)-SMR2-125-PP)/P-1A-STL-150EH/ P-1A-STL-150EH (SMR0 -COL12-12V)/ SO-PT1 / SGT

Connection Type 2: **Collector kit with pilot and drain lines**

Sectional Appearance

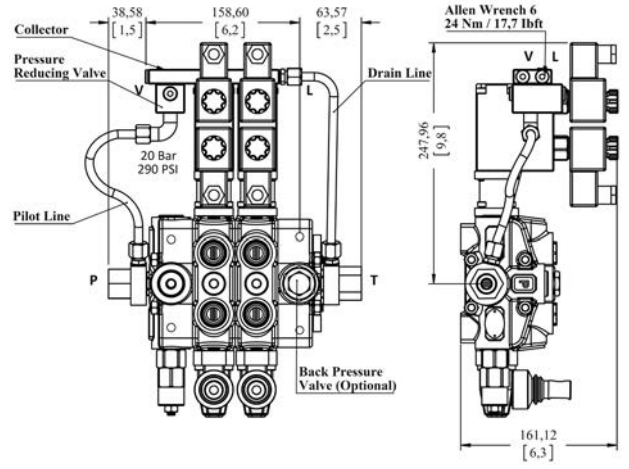

Diagram

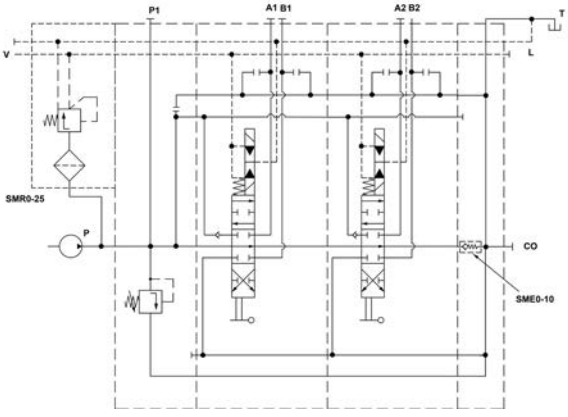

SMR 0-25 Valve Operating Features (Pressure reducing valve)
Outlet Pressure .....: 20 Bar / 290 Psi
Max. Flow.....: 8 l/min
Filtering .....:80 µ
Code= ORV PD150-2P (SD(LA)-SMR2-125-PP)/P-1A-STL-150EH/ P-1A-STL-150EH (SMR0 –COL22-12V)/ SO-PT1 / SGT

WORKING SECTION KIT

With Port Valves Type

Kit No: **AA**

Sectional Appearance

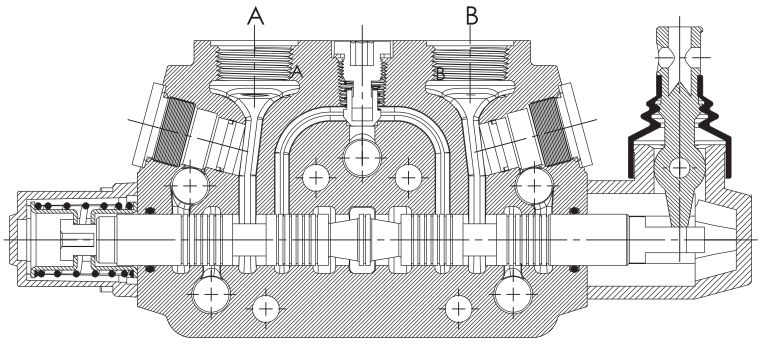

Diagram

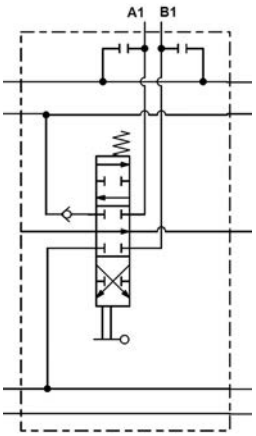

With Port Valves Type

Kit No: **AB**

Sectional Appearance

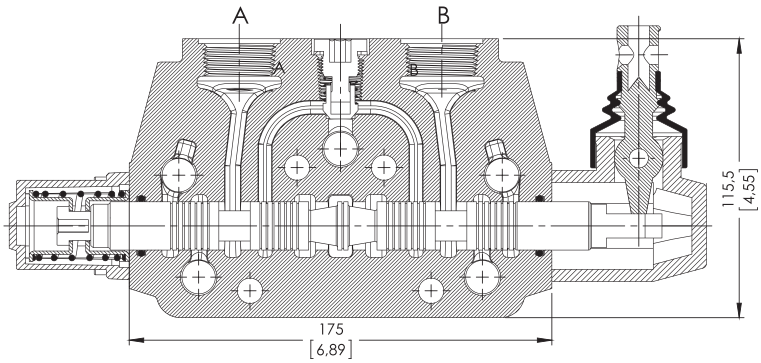

Diagram

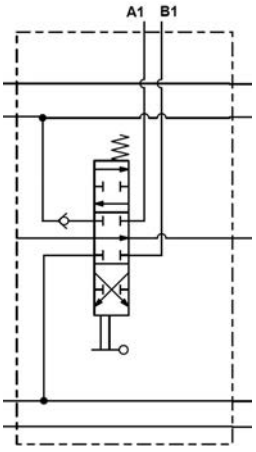

SPOOL POSITIONERS – SIDE OF LEVER CONTROL

Lever Controls

Kit No: **STL - L0**

Sectional Appearance

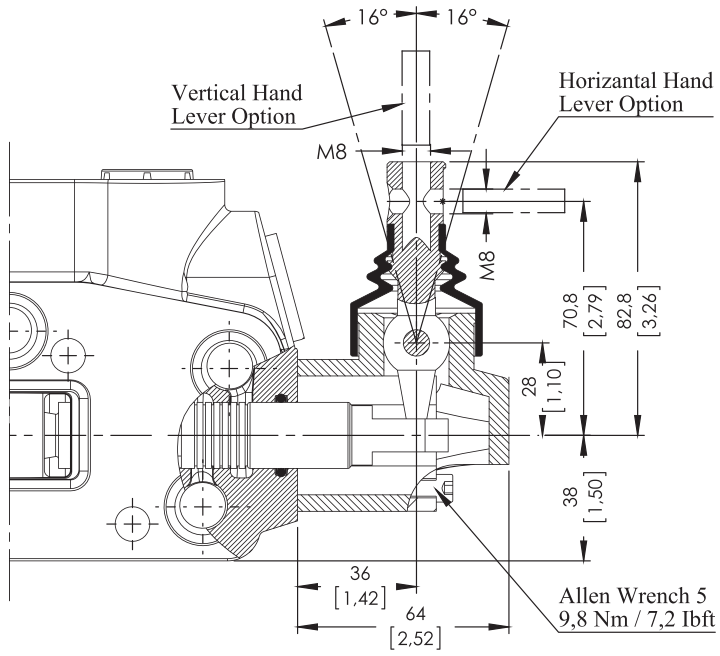

Diagram

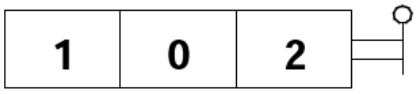

Kit No: **STL - L180**

Sectional Appearance

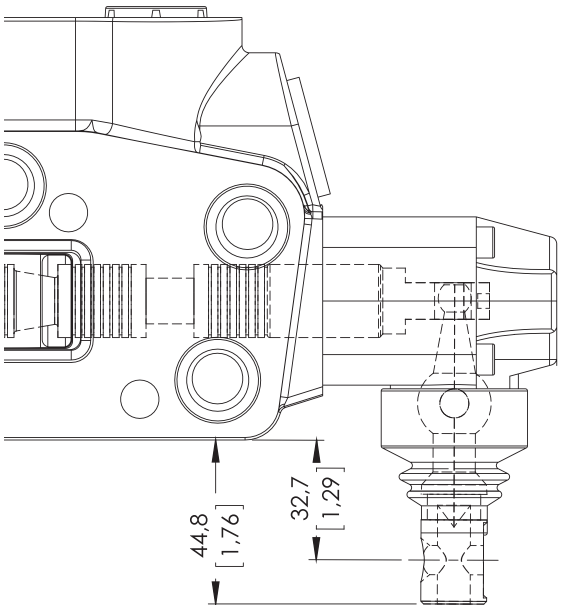

Diagram

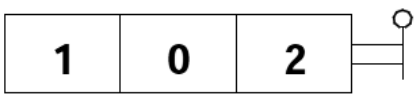

Note: Arm lever pivot box is aluminium cap protected. And it can be rotated 180º.

SPOOL POSITIONERS – SIDE OF LEVER CONTROL

Lever Controls - Joystick

Kit No: **JL**

Exploded View

Diagram

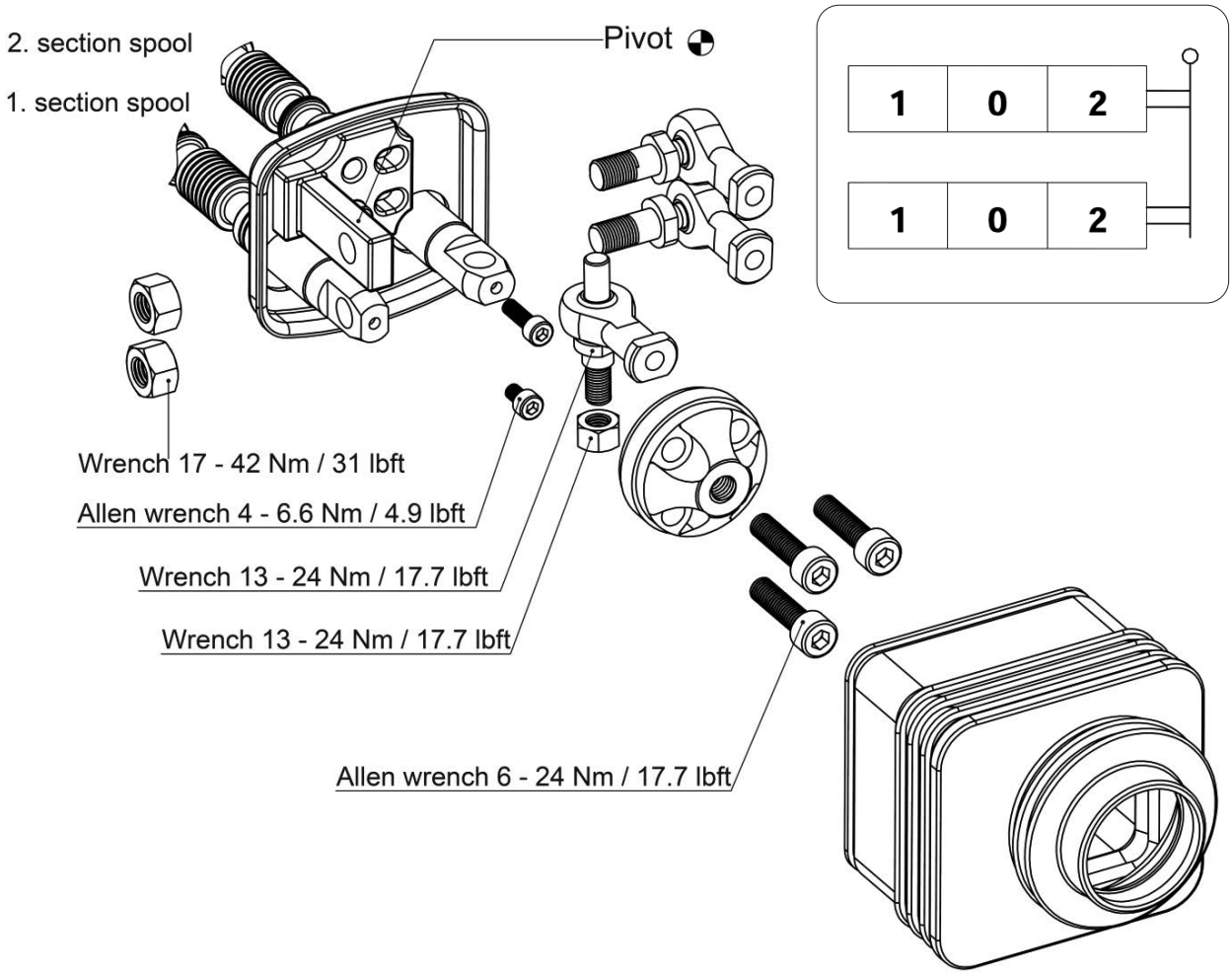

Operation Angle:

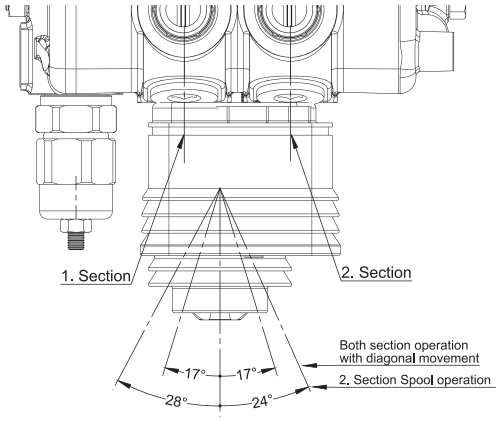

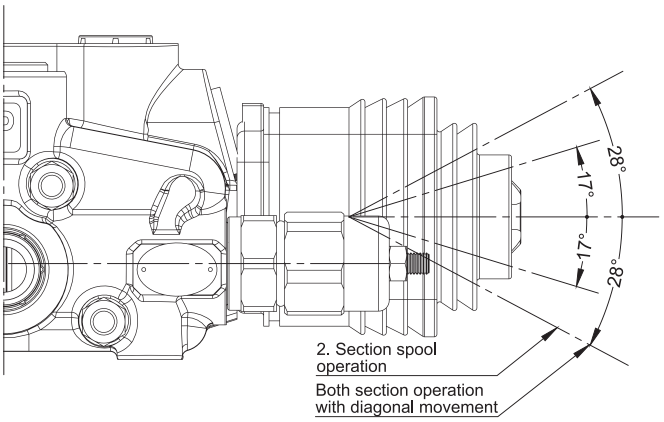

SPOOL POSITIONERS – SIDE OF LEVER CONTROL

Lever Controls - Joystick

Dimensions and movement sceme

Type No: **JL1** — **Application:** Pivot placed down on the Left

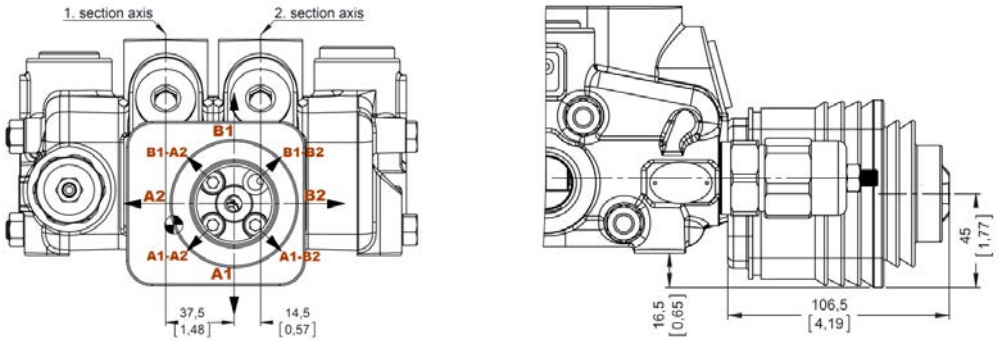

Type No: **JL2** — **Application:** Pivot placed down on the right

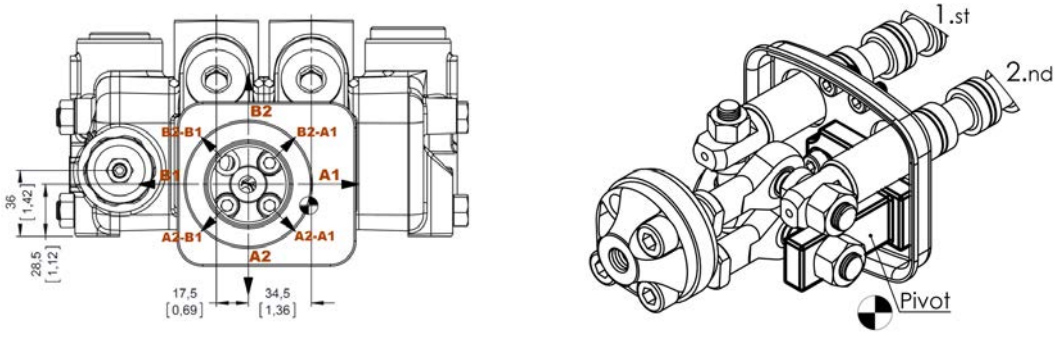

Type No: **JL3** — **Application:** Pivot placed above on the Left

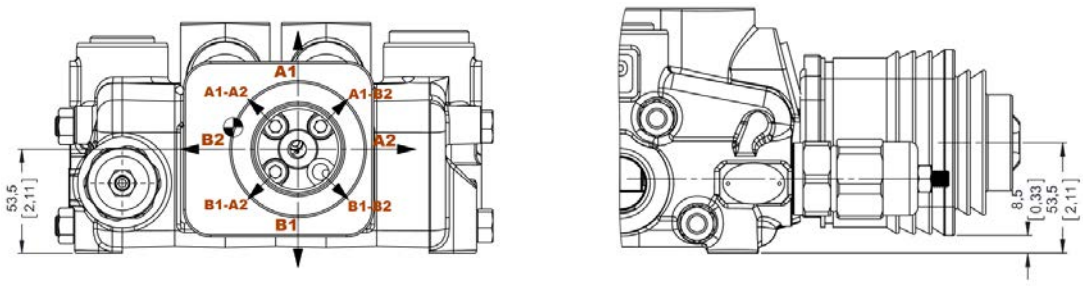

Type No: **JL4** — **Application:** Pivot placed above on the right

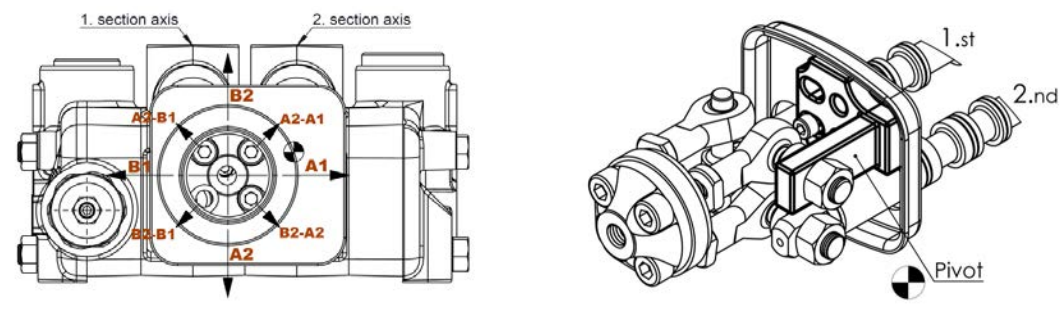

SPOOL POSITIONERS – SIDE OF LEVER CONTROL

Lever Controls - Cable Control

Kit No: **HL**

Sectional Appearance | Diagram

Waterproof cap prearranged for remote control with flexible cable.

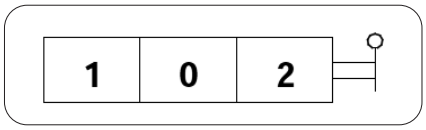

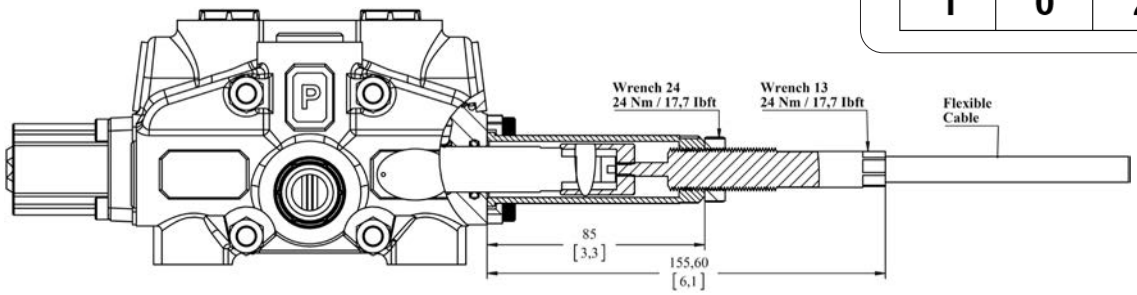

Note: Remote cable control is several options. Please indicte the cable length demanded and contact our sales department.

Example Operation

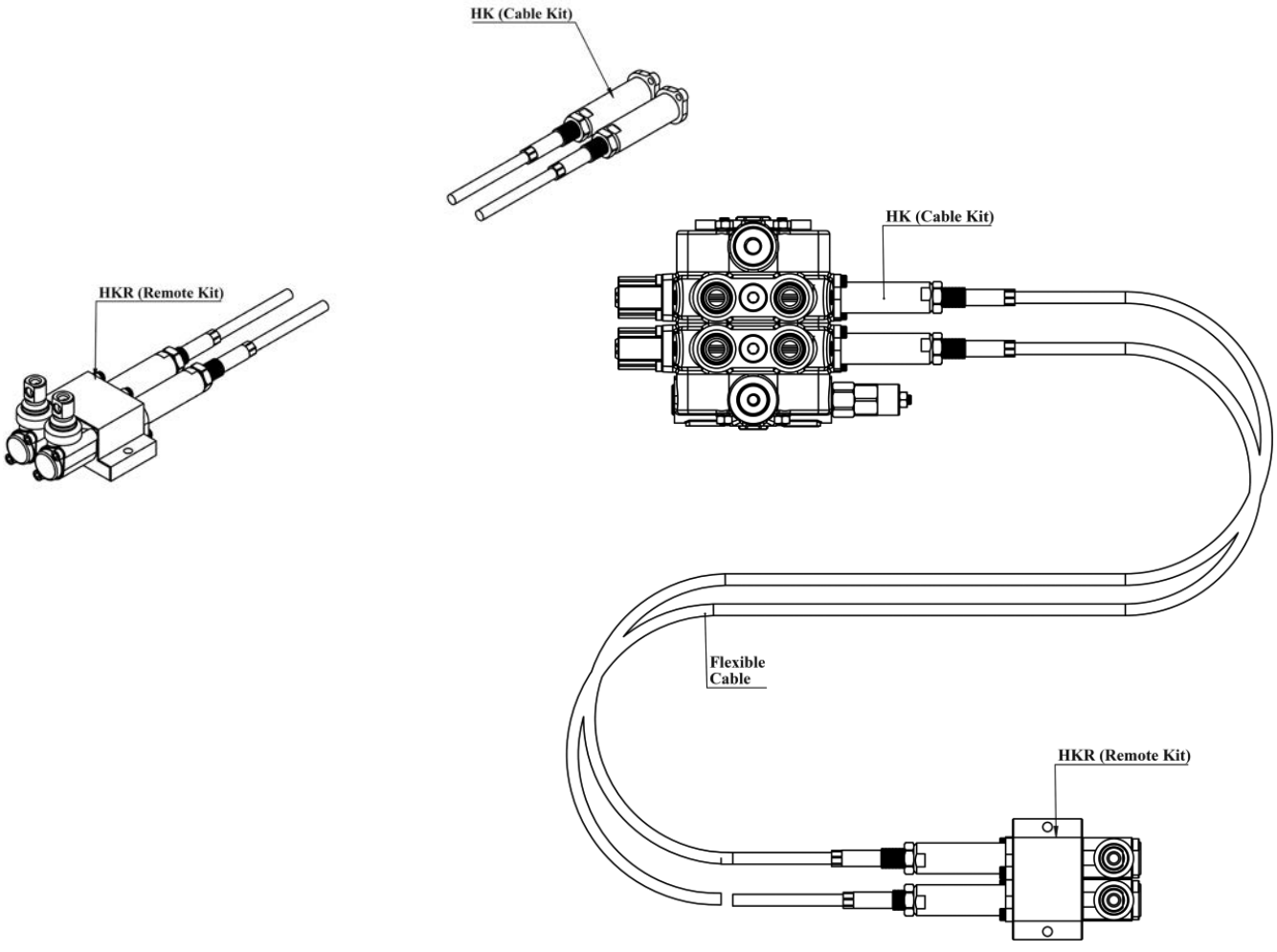

OUTLET COVER - TANK SIDE

Output Cover Options

Kit No: **SO**

Sectional Appearance

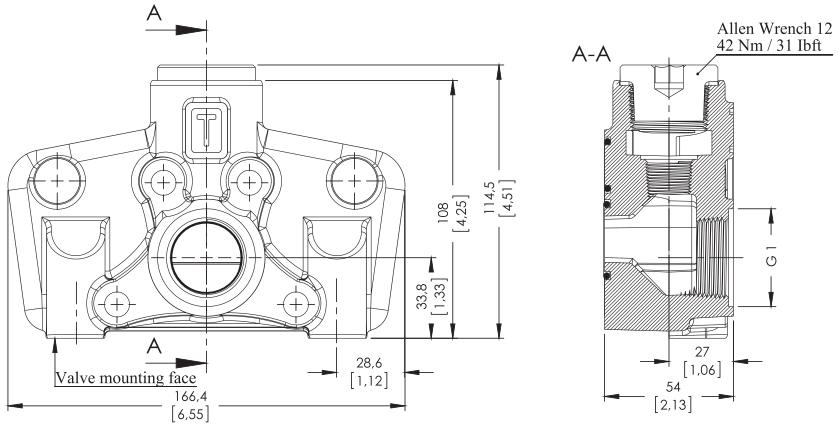

Type No: **TO**

Sectional Appearance

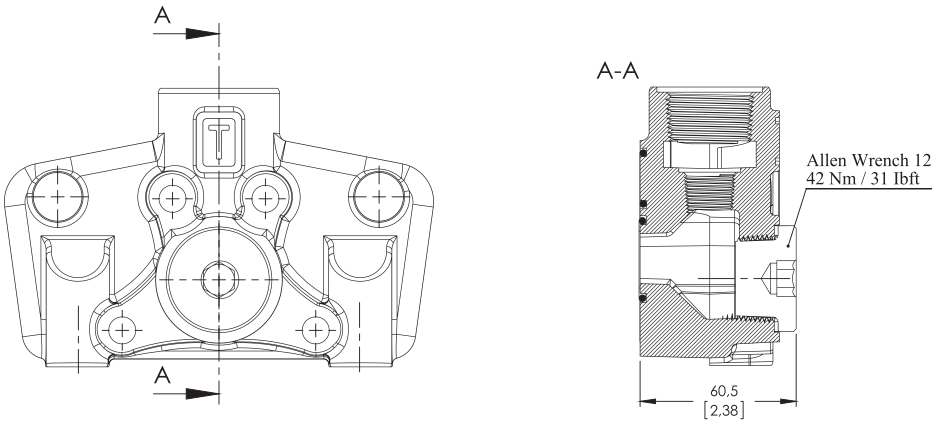

Hydraulic Diagram

Type No: **SO**

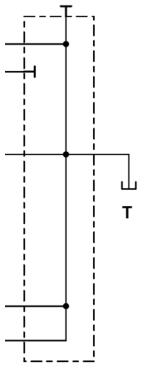

Type No: **TO**

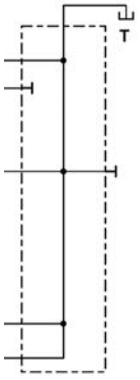

OUTLET COVER - TANK SIDE

Output Cover Options

Kit No: **TCO**

Sectional Appearance

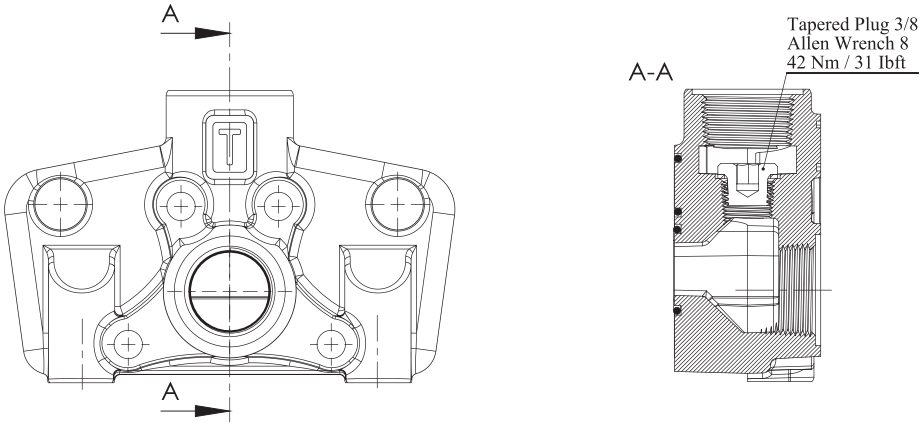

Kit No: **TC**

Sectional Appearance

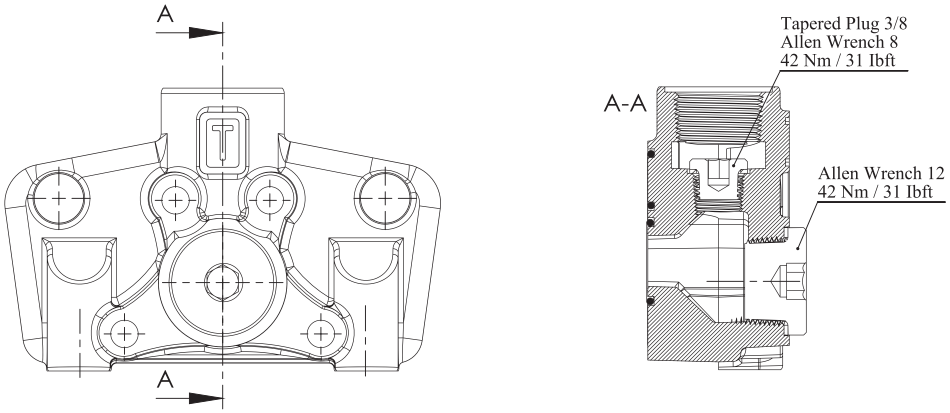

Hydraulic Diagram

Type No: **TCO**

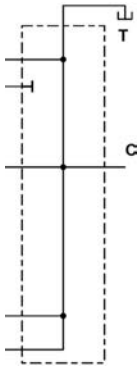

Type No: **TC**

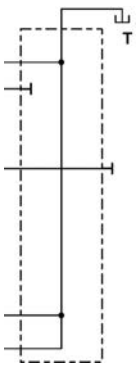

PORT VALVES OPTIONS

Anti Shock Valves

Code:

YAA-1 (T1-100)

- Pressure Setting in Bar
- Adjusting type T=With screw , L=Valve Set / Spring Type (1,2,3)
- 1 = Mounted Port A , 2 = Mounted Port B , 3 = Mounted Port A and B

Hydraulic Diagram

Kit No: **YAS1**

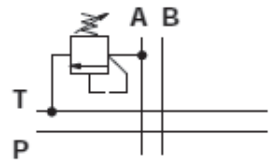

Kit No: **YAS2**

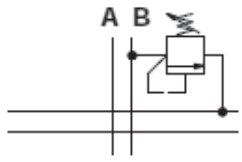

Kit No: **YAS3**

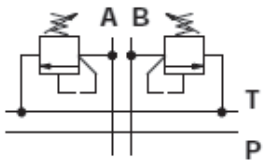

Adjustment Type on Valve:

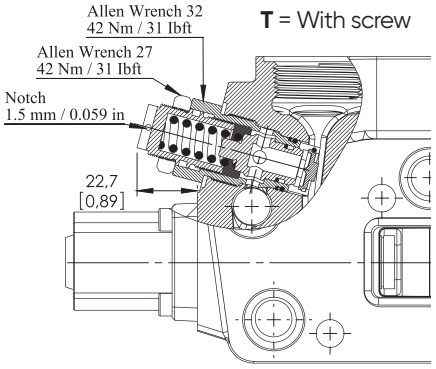

T = With screw

L = Valve set

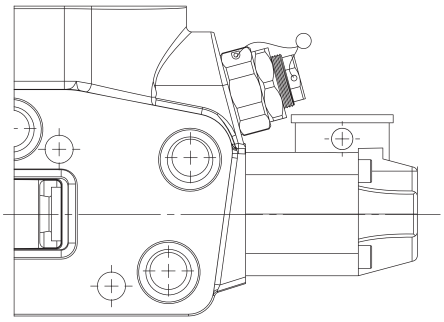

Performance Data:

Spring No=1 , Setting 50 bar / 725 psi

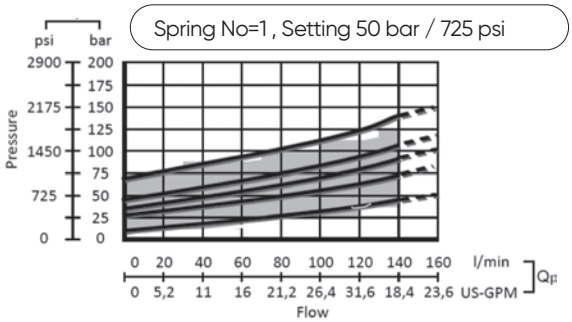

Spring No=2 , Setting 100 bar / 1450 psi

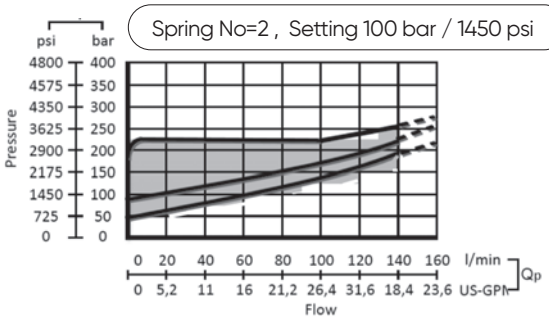

Spring No=3 , Setting 200 bar / 2900 psi

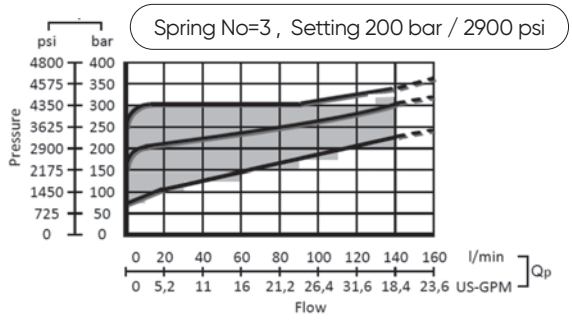

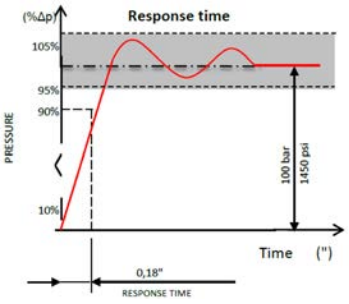

PORT VALVES OPTIONS

Anti shock And Anti Cavitation Valves

Code:

YAA-1 (T1-100)

- **Pressure Setting in Bar**
- **Adjusting type T=With screw , L=Valve Set / Spring Type (1,2,3)**
- **1 = Mounted Port A , 2 = Mounted Port B , 3 = Mounted Port A and B**

Hydraulic Diagram

Kit No: **YAA1**

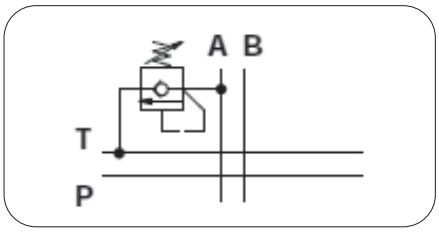

Kit No: **YAA2**

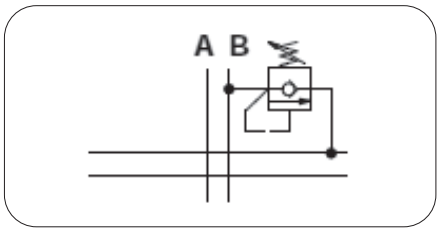

Kit No: **YAA3**

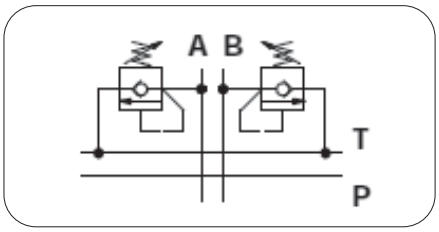

Adjustment Type on Valve:

T = With screw

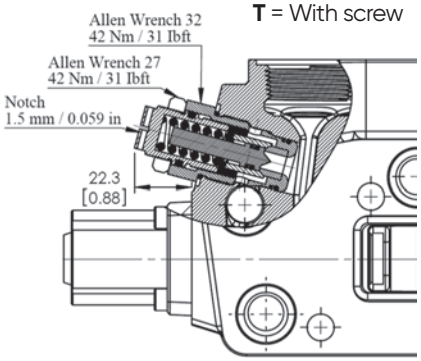

L = Valve set

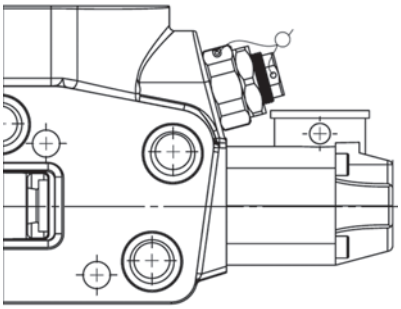

Performance Data:

Spring No=1 , Setting 63 bar / 900 psi

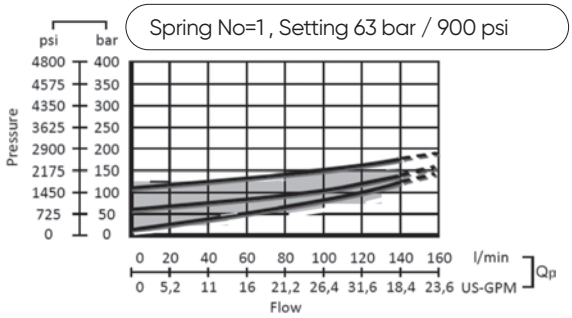

Spring No=2 , Setting 100 bar / 1450 psi

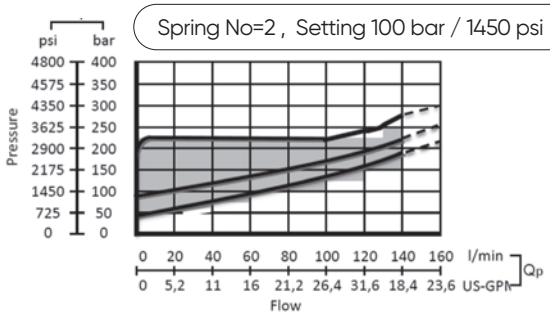

Spring No=3 , Setting 200 bar / 2900 psi

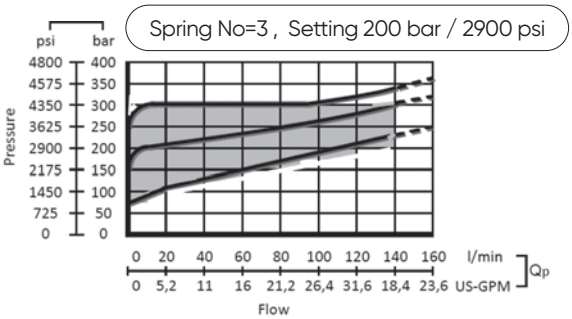

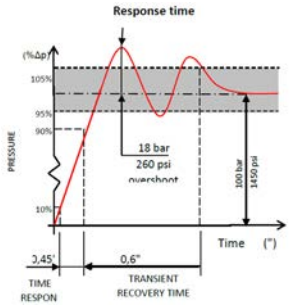

PORT VALVES OPTIONS

Anti Cavitation Valves

Code:

YAC-1 → **1 =** Mounted Port A , 2=Mounted Port B , 3=Mounted Port A and B

Hydraulic Diagram

Kit No: **YAC1**

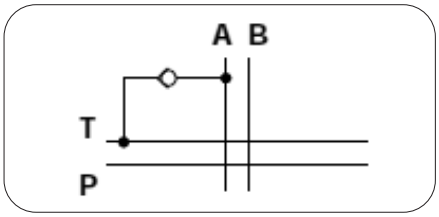

Kit No: **YAC2**

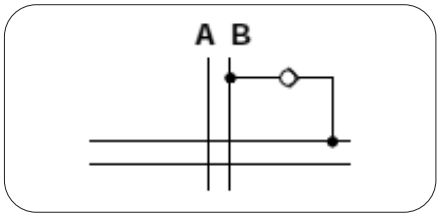

Kit No: **YAC3**

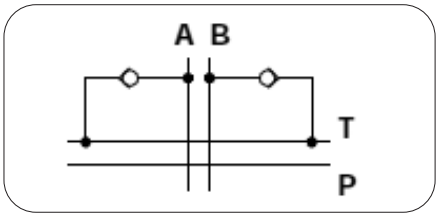

Adjustment Type on Valve And Data:

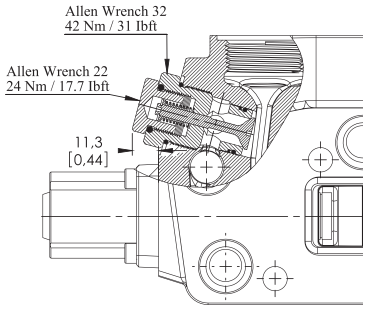

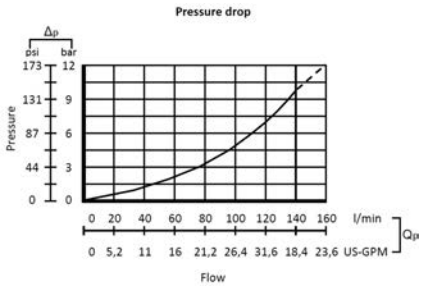

Valve Blaking

Plug with tank connection

DST-1 (1:Mounted port A – 2:Mounted port B)

Sectional Appearance

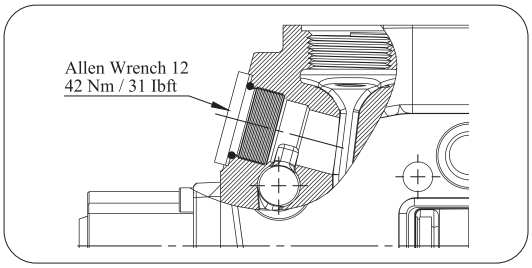

Hydraulic Diagram

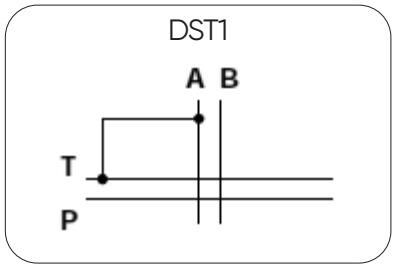

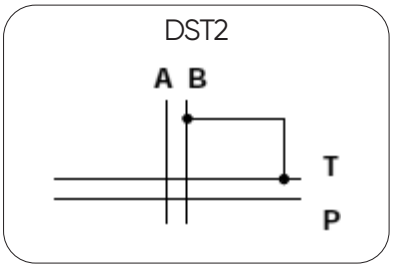

Plug

YP-1 (1:Mounted port A – 2:Mounted port B – 3:Mounted port A and B)

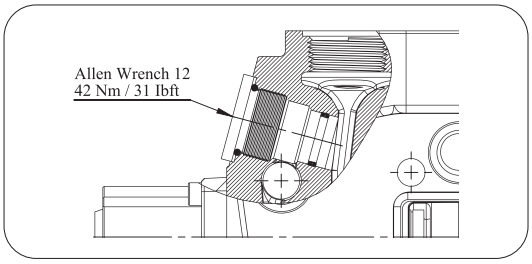

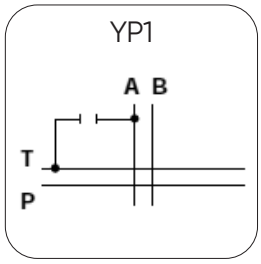

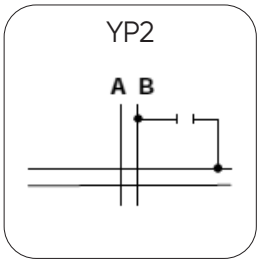

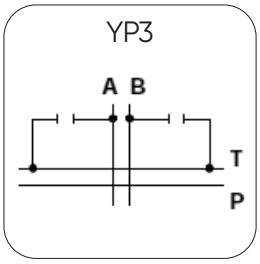

INSTALLATION AND MAINTENANCE

The ORV-PD150 valve is assembled and tested as per the technical specification of this catalog. Before the final installation on your equipment, follow the below recommendation:

• The valve can be assembled in any position, in order to prevent body deformation and spool sticking mount the product on a flat surface;

• In order to prevent the possibility of water entering the lever box and spool control kit, do not use high pressure wash down directly on the valve;

• Before painting, ensure plastic port plugs are tightly in place.

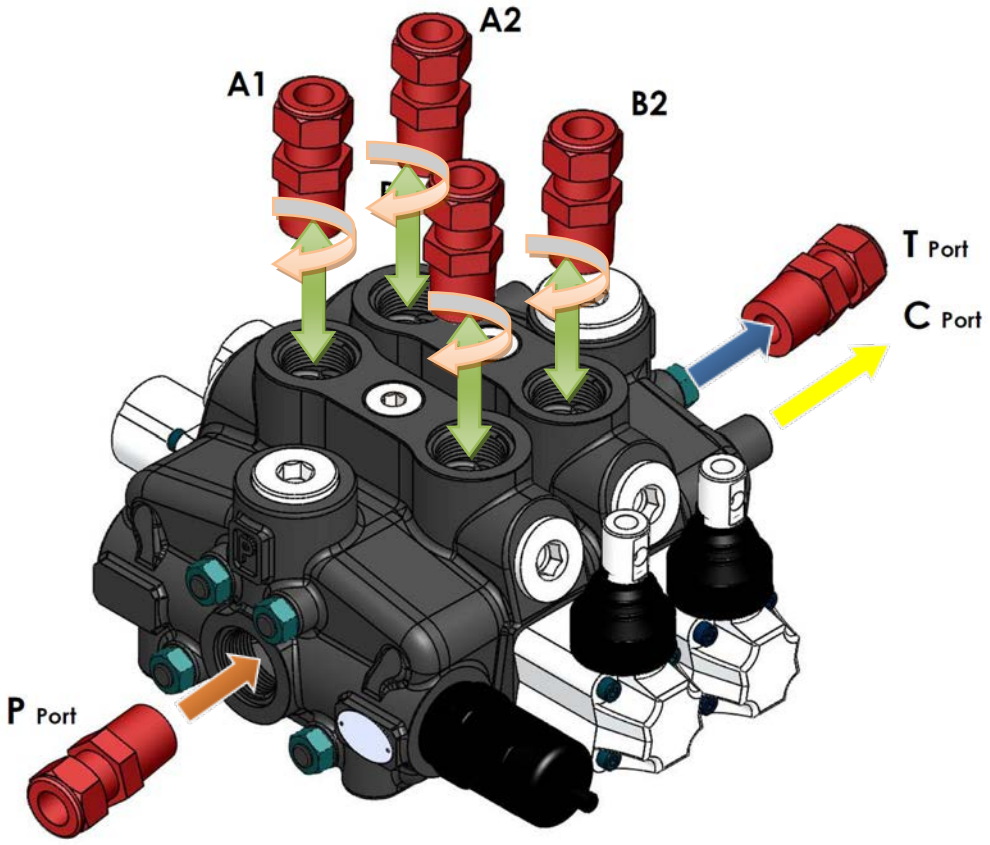

Threads Type (Nm / lbft)	P Port	A and B Port	T Port
BSP (ISO 228/1)	G 3/4	G 3/4	G 1
With O--Ring seal	70 / 51.6	70 / 51.6	100 / 73.7
With copper washer	70 / 51.6	70 / 51.6	90 / 66.3
With steel and rubber washer	70 / 51.6	70 / 51.6	100 / 51.6
BSP (ISO 228/1)	G 1	G 1	G 1
With O--Ring seal	100 / 73.7	100 / 73.7	100 / 73.7
With copper washer	90 / 66.3	90 / 66.3	90 / 66.3
With steel and rubber washer	100 / 51.6	100 / 51.6	100 / 51.6
UN--UNF (ISO 11926--1)	1 5/16--12 UNF--2B	1 1/16--12 UNF--2B	1 5/16--12 UNF--2B
With O--Ring seal	150 / 110.6	95 / 70	150 / 110.6

TECHNICAL DATA

Ports Dimensional Data

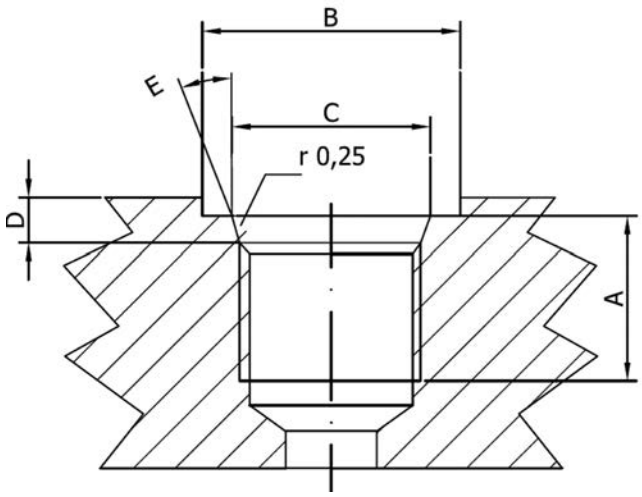

SAE UN-UNF (ISO 725)						
Dimensions		7/8-14 UNF SAE10		1"1/16-12 UN SAE12		1"5/16-12 UN SAE16	
mm	in						
A		17	0,67	20	0,79	20	0,79
B		34	1,34	41	1,61	49	1,92
C		23,9	0,94	29,2	1,15	35,5	1,40
D		2,5	0,10	3,3	0,13	3,3	0,13
E		15°		15°		15°	

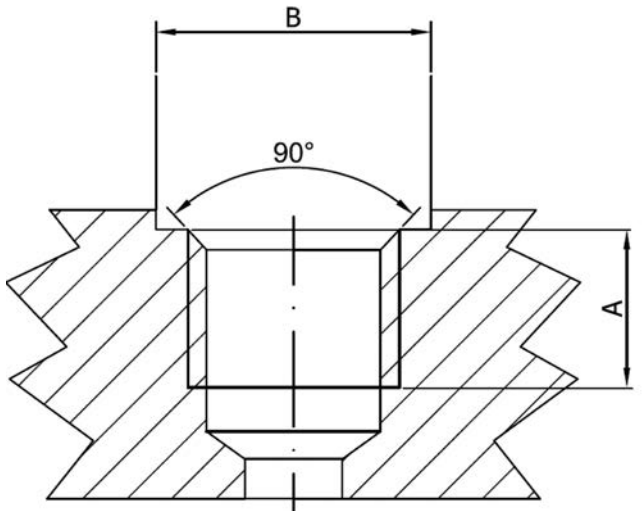

BSP (ISO 228)						
Dimensions		G 1/2"		G3/4		G1	
mm	in						
A		16	0,63	18	0,71	20	0,79
B		27	1,06	33	1,30	40	1,57

ORVAL HYDRAULIC

ORV PD150



ORVAL HYDRAULIC

SECTIONAL
VALVES

ORV-PD250

CE

TÜV International Certification
TÜV THÜRINGEN
CERT
AZAV
15 190 17185
TIC





CONTENTS

Working Conditions	3
Dimensional Data	3
Hydraulic Circuit	3
Performance Data And Curve	3
Inlet Relief Options	3
Ordering Codes	3
Inlet Cover- Pump Side	3
Spool Options	3
Spool Positioners – Side of Return	3
Working Section Kit	3
Spool Positioners – Side of Lever Control	3
Spool Positioners – Side of Lever Control	3
Spool Positioners – Side of Lever Control	3
Outlet Cover- Tank Side	3
Port Valves Options	3
Installation and Maintenance	3
Technical Data	3

Additional Informations

Note: This catalog shows the product in the most standard configurations. For Other Configurations, more detailed information or special request, Please contact Customer Service Dpt.

Warning!: All specifications of this catalog refer to the standard product at this date (11/2019) . ORVAL, oriented to a continuous improvement, reserves the right to discontinue, modify or revise the specifications, without notice.

ORVAL IS NOT RESPONSIBLE FOR ANY DAMAGE CAUSED BY AN INCORRECT USE OF THE PRODUCT.

WORKING CONDITIONS

Nominal Flow Rating / Displacement	240 l/min	63 U.S.G.P.M
Maximum Working Pressure (Series Circuit)	210 Bar	3050 PSI
Maximum Working Pressure (Parallel Circuit)	315 Bar	4600 PSI
Max. Back Pressure	25 Bar	360 PSI
Oil Temperature with NBR Seals	-20 to 80 C°	-4 to 176 F °
with FPM (Viton) Seals	-20 to 100 C°	-4 to 212 F °
Oil Viscosity – Operating Range	From 10 to 75 mm2/s	From 10 to 75 cSt
Minumum / Maximum	10 / 400 mm2/s	10 / 400 cSt
Oil Filtration	≤30 µ	
Ambiant Temperature Range	-35 to 60 C°	-31 to 140 F °
Number Of Spools	1 to 12	
Internal Leakage (at 100 bar (1450 PSI), 40C° (110 F°), 46 cSt – A(B)–T)	4 cm3/min	0,24 in3/min
Max. Level Of Contamination	19/16 - ISO 4406	
Tie rod tightening torque	40 Nm	30 lbft

Not: This catalogue shows technical specifications measured with mineral oil of 46 mm2/s-46 cSt viscosity at 40 C° temparture.

Features

• Simple, compact and heavy duty designed sectional valves from 1 to 12 sections for open and closed center hydraulic systems.
• Optionaly Carry-Over port only tandem circuit.
• Fitted with a main pressure relief valve.
• Interchangeable spool diametre is 25 mm – 0,79 in.
• Available manual, pneumatic, hydraulic and electro-pneumatic spool control kits.

DIMENSIONAL DATA

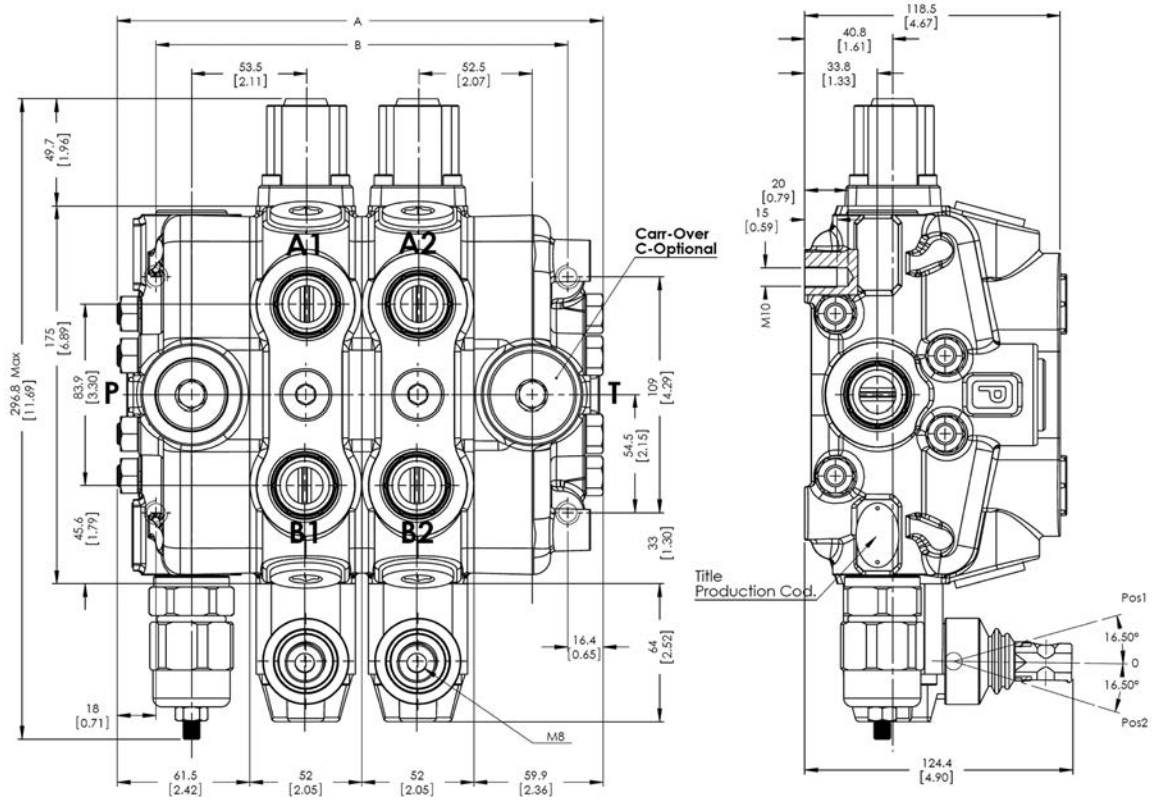

TYPE	A		B		Weight	
	mm	in	mm	in	Kg	lb
ORV- PD250-1P	160	6.30	73	2.87	13.46	29.67
ORV- PD250-2P	212.5	8.37	125.5	4.94	19.60	43.21
ORV- PD250-3P	265	10.43	178	7.00	25.74	56.75
ORV- PD250-4P	317.5	12.50	230.5	9.07	31.88	70.29
ORV- PD250-5P	370	14.56	283	11.14	38.02	83.83
ORV- PD250-6P	422.5	16.63	335.5	13.20	44.16	97.37
ORV- PD250-7P	475	18.50	388	14.96	50.30	110.91
ORV- PD250-8P	527.5	20.76	440.5	17.34	56.44	124.45
ORV- PD250-9P	580	22.83	493	19.41	62.58	137.99
ORV- PD250-10P	632.5	24.90	545.5	21.48	68.72	151.53
ORV- PD250-11P	685	26.97	598	23.54	74.86	165.07
ORV- PD250-12P	737.5	29.03	650.5	25.61	81.00	178.61

STANDARD THREADS

PORT	BSP (Iso 228)		UN-UNF (Iso 11926-1)
	1" Series	11/4"Series	
P Inlet	G 1	G 1/4	1 5/16 -12 UN
A-B Ports	G 1	G 1/4	11/16 - 12 UN
T Outlet	G 1/4	G 1/14	1 5/16 -12 UN
Pneumatic	G 1/4	G 1/4	NPTF 1/8 - 27
Carry-Over	G 3/8	G 3/8	G 3/8

HYDRAULIC CIRCUIT

Parallel

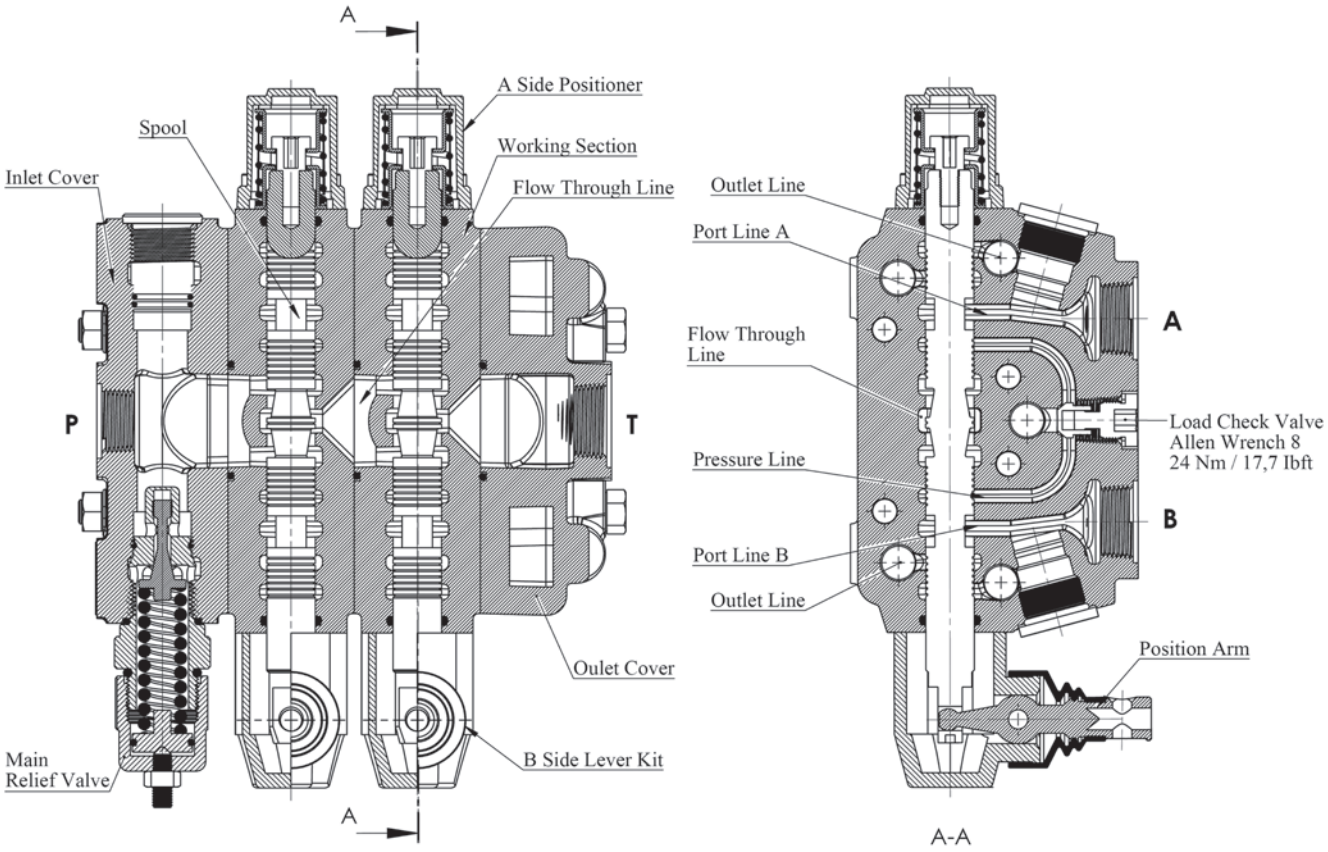

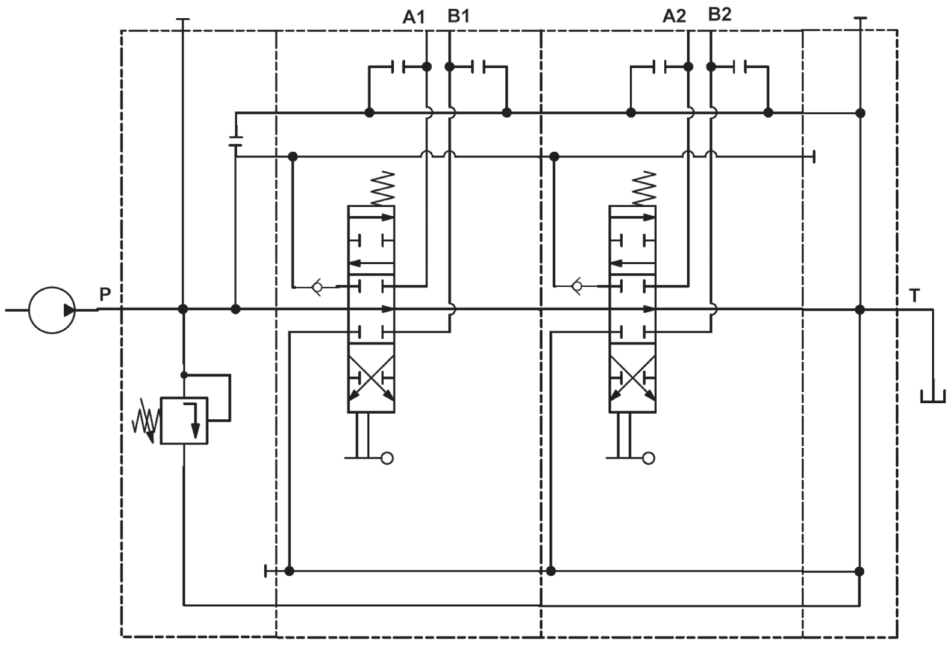

Code: ORV PD250-2P (SD(LA)-SMR2-125-PP)/P-1A-STL-SR/ P-1A-STL-SR/ SO-PT1 / SGT

HYDRAULIC CIRCUIT

Inlet Cover – Pump Side

SD - Side inlet with direct pressure relief valve
TD - Top inlet with direct pressure relief valve
SP - Side inlet with relief valve blanking plug

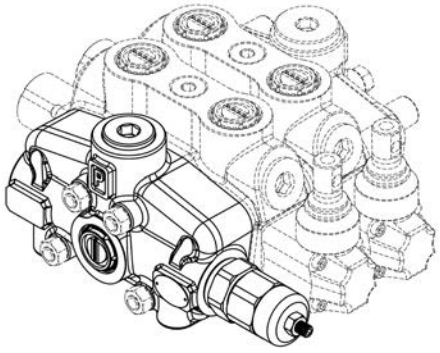

Type = SD

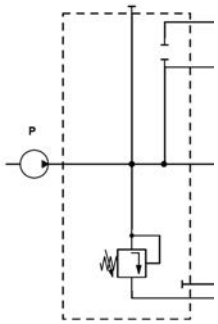

Type = TD

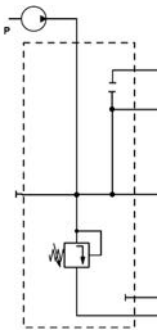

Type = SP

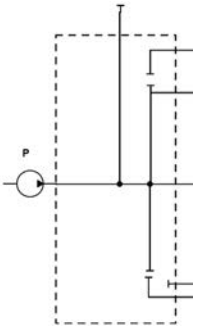

Working Sections

P – Parallel

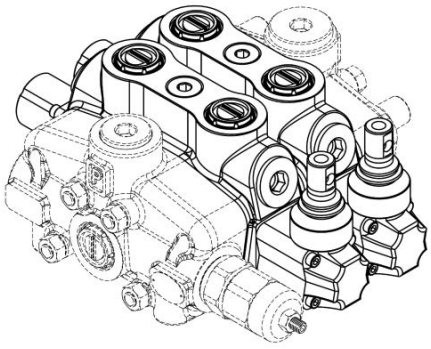

Type = P

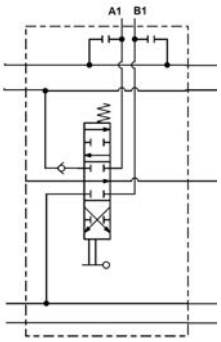

HYDRAULIC CIRCUIT

Outlet Cover (Tank Side)

SO - Side outlet
TO - Top outlet
TCO - Top outlet with carry-over
TC - Top outlet with closed centre

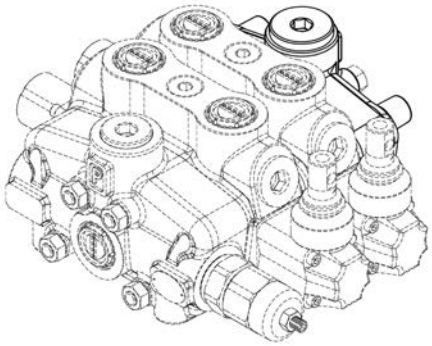

Type = SO

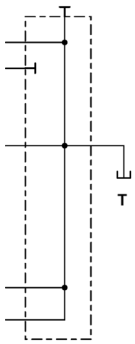

Type = TO

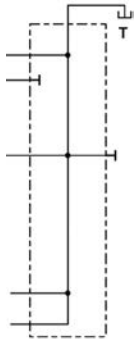

Type = TCO

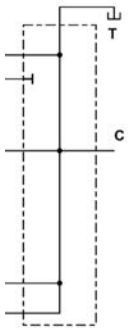

Type = TC

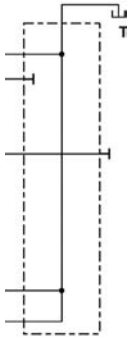

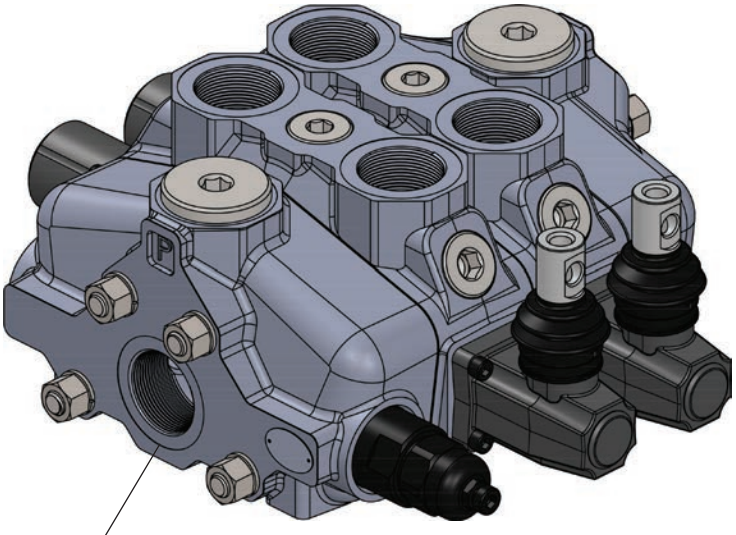

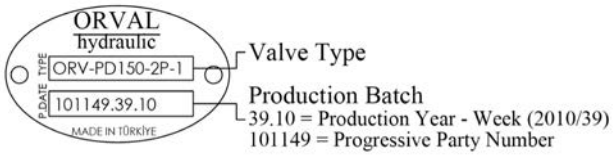

Valve Type

Production Batch
39.10 = Production Year - Week (2010/39)
101149 = Progressive Party Number

HYDRAULIC CIRCUIT

Standard Configurations With Top Inlet And Outlet Ports - RH (Right Inlet)

A symetrical body allows the reverse assembly of spool.

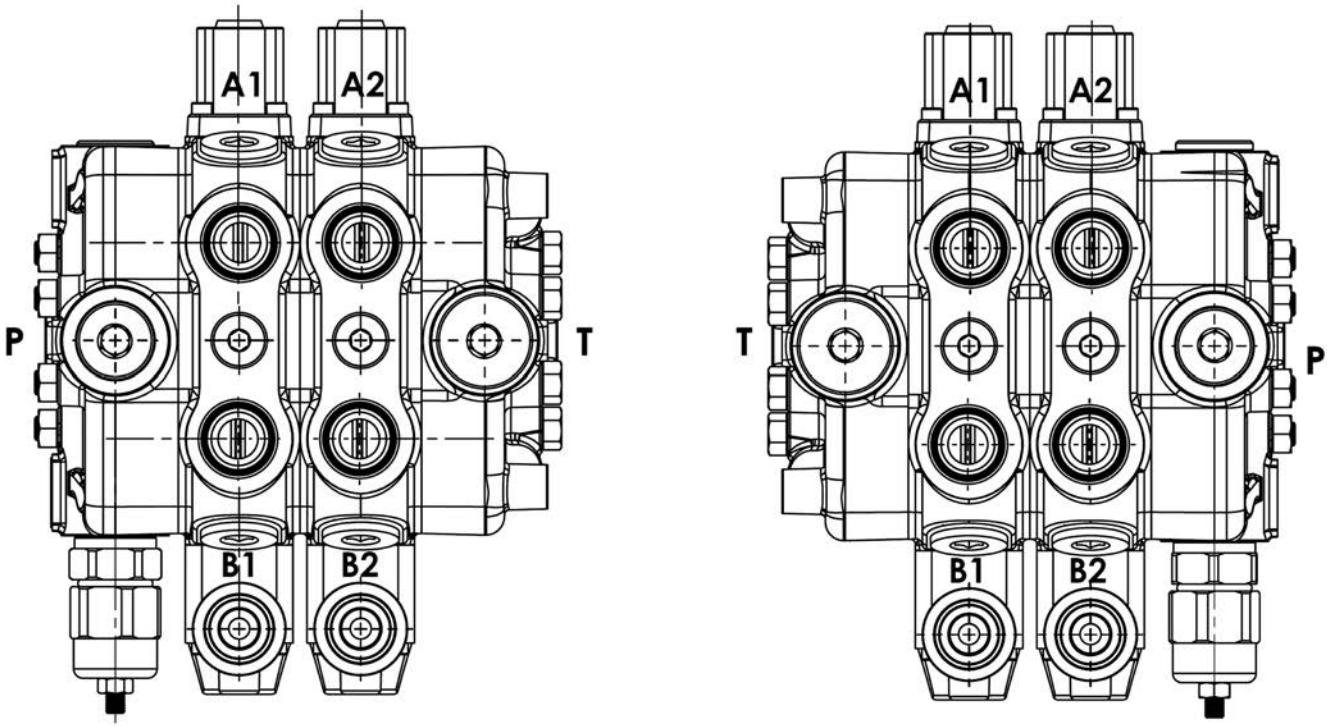

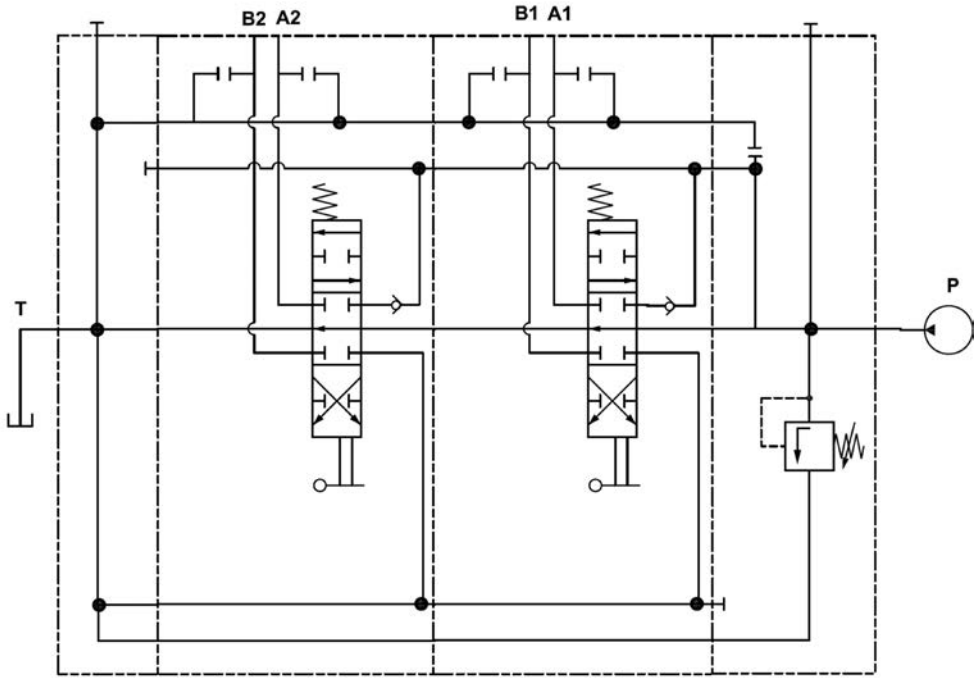

Code: ORV PD250-2P (SD(RA)-SMR2-125-PP)/P-1A-STL-SR/ P-1A-STL-SR/ SO-PT1 /

PERFORMANCE DATA AND CURVE

Open Center - Pressure Drop (P-T)

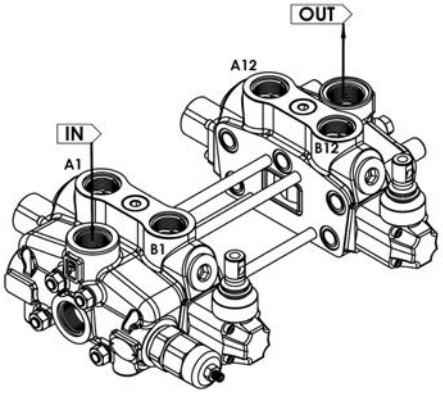

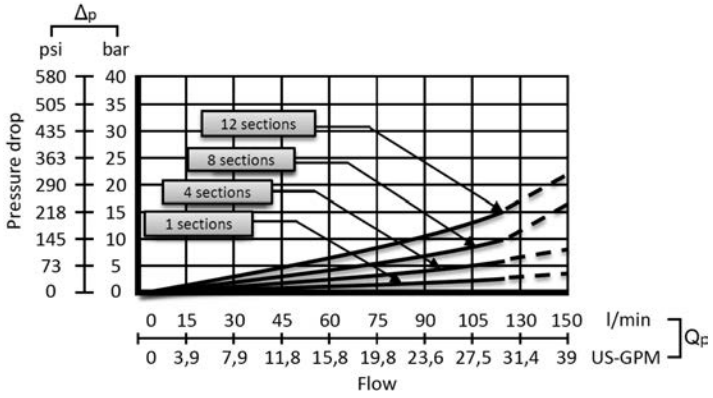

Inlet to Work Port - Pressure Drop (P-A/B)

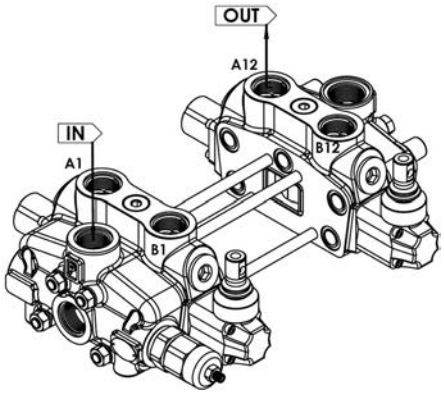

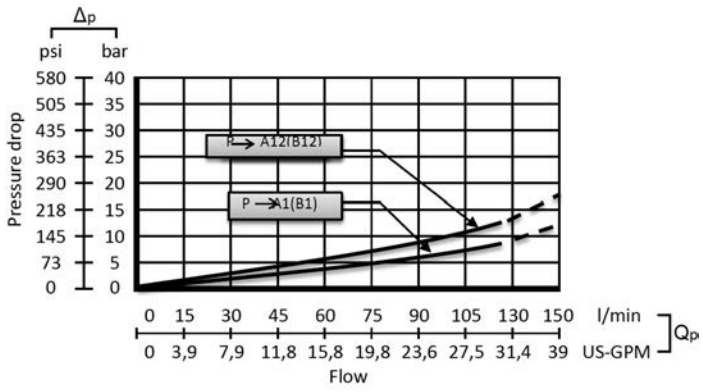

Work Port to Outlet - Pressure Drop (A/B-T)

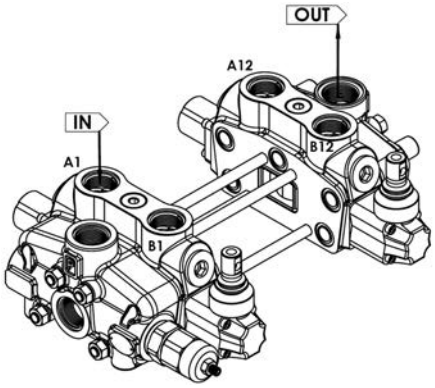

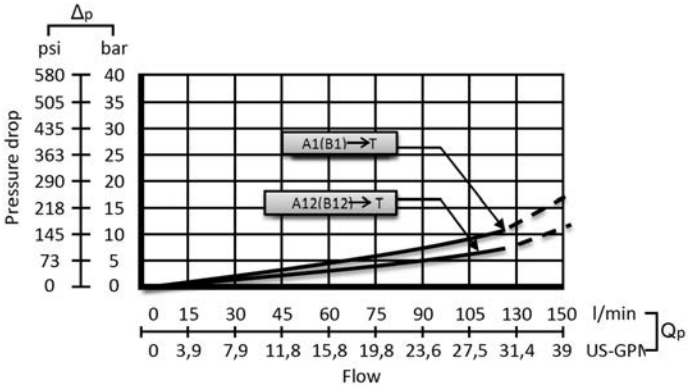

INLET RELIEF OPTIONS

Direct Pressure Relief Valve

Code:

SMR2 – 125

- **Pressure Setting Bar in (Standard 125 bar)**
- **Standard Main Relief Spring Type -2**

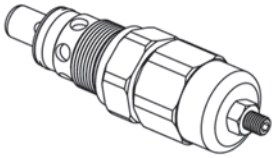

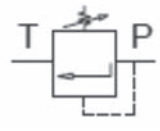

Performance Data

Spring Type Number: 1
Setting= 80 Bar -Range=63-125 Bar

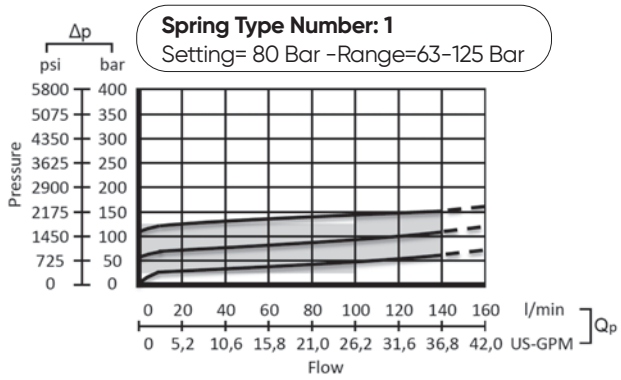

Spring Type Number: 2
Setting= 125 Bar -Range=100-165 Bar

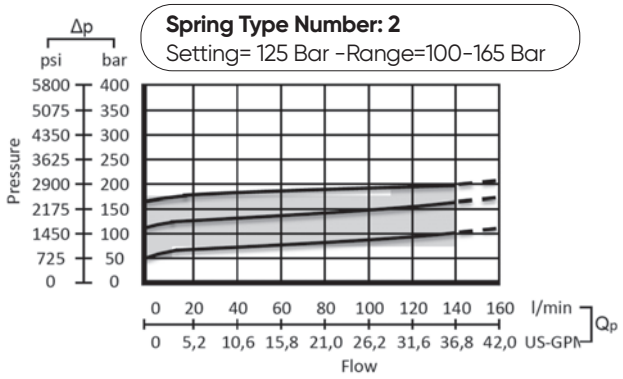

Spring Type Number: 3
Setting= 175 Bar -Range=125-250 Bar

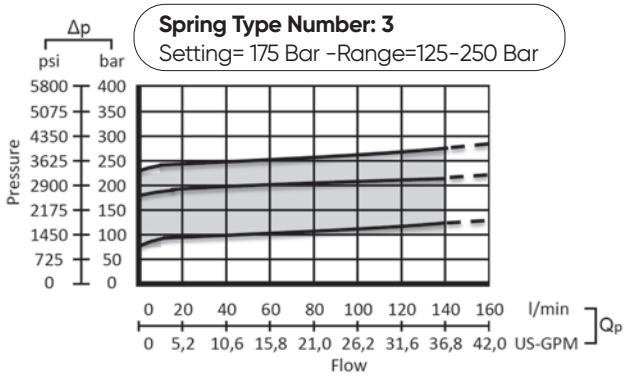

Spring Type Number: 4
Setting= 220 Bar -Range=200-315 Bar

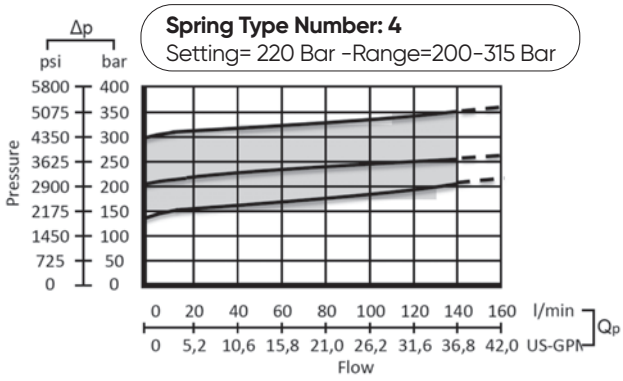

Adjustment Type on Valve

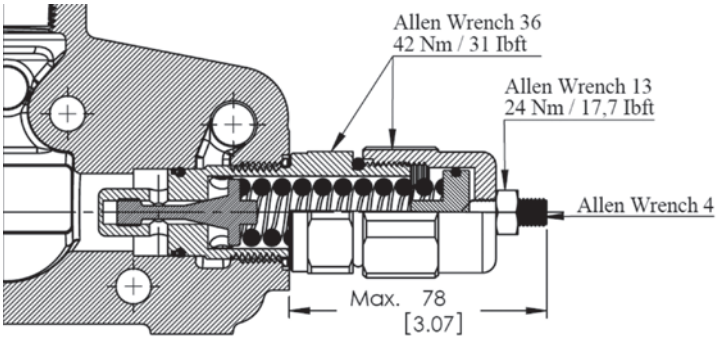

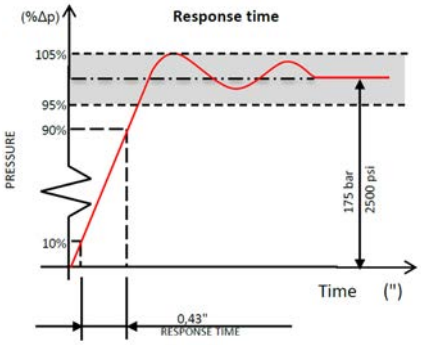

INLET RELIEF OPTIONS

Direct Pressure Relief Valve

Kit No: **PAC**

Sectional Appearance

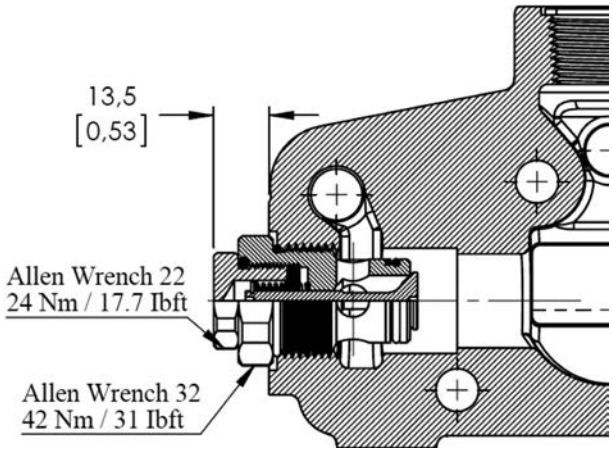

Diagram

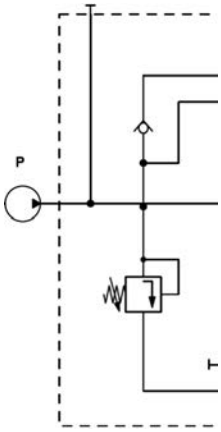

Performance Data

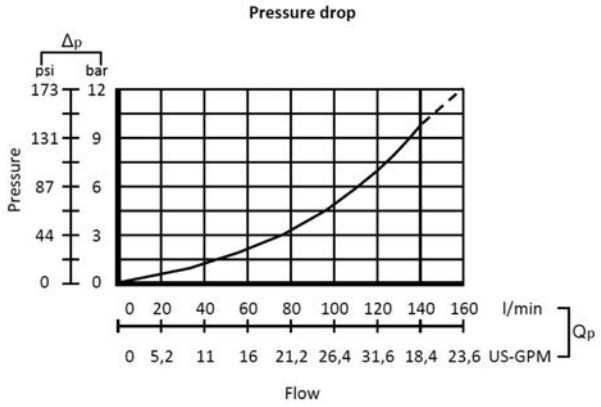

Relief Blanking Plug - SP

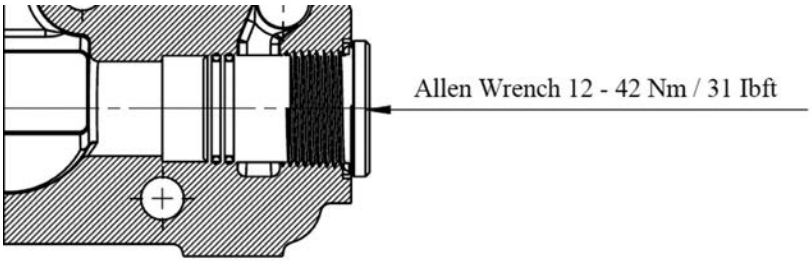

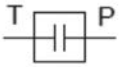

ORDERING CODES

Order Example

2.2 2.4 3.2

ORV PD250-2P (SD-SMR2-125-PP)/P-1A- STL- YAC-SR / P-1A-STL-250P / SO-PT1-CO / SGT

1 1.2 1.4 2.1 2.3 2.6 3.1 3.3

Base Code "0" — 1 st Section — Following Section — Output Section

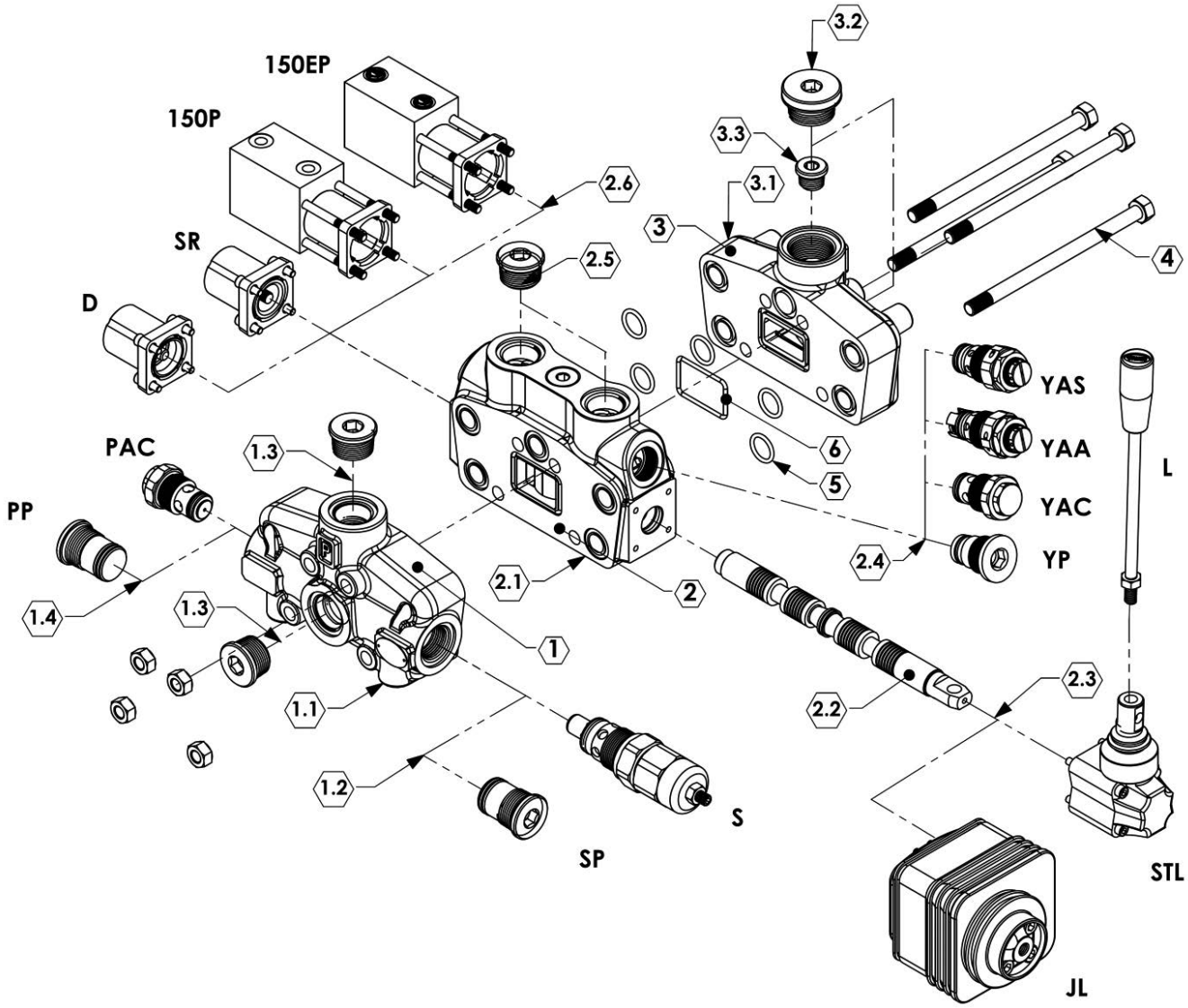

ORDERING CODES

1- Inlet Section

ORV PD250-2P PD150 =Valve Type-(PD)- Sectional
(250) - Max. Flow Rate
2P =Sections Quantity
SD = Side inlet with direct pressure relief valve
(1SD250100)
TD = Top inlet with direct pressure relief valve
(1TD250100)
SP = Side inlet with relief valve blanking plug
(1SP250100)

2- Working Section

P = Parallel (2P250100)

3- Output Section

SO = Side outlet (3SO250100)
TO = Top outlet (3TO250100)
TCO = Top outlet with carry-over (3TCO250100)
TC = Top outlet with closed centre (3TC250100)

4- Assembling Kit

Tie rod kit for 1 section valve - (4TRK1250100)
Tie rod kit for 2 section valve - (4TRK2250100)
Tie rod kit for 3 section valve - (4TRK3250100)
Tie rod kit for 4 section valve - (4TRK4250100)
Tie rod kit for 5 section valve - (4TRK5250100)
Tie rod kit for 6 section valve - (4TRK6250100)
Tie rod kit for 7 section valve - (4TRK7250100)
Tie rod kit for 8 section valve - (4TRK8250100)
Tie rod kit for 9 section valve - (4TRK9250100)
Tie rod kit for 10 section valve - (4TRK10250100)
Tie rod kit for 11 section valve - (4TRK11250100)
Tie rod kit for 12 section valve - (4TRK12250100)

5-6- O_Ring Kit

5. -17.00x2.65 NBR 70 SH O-Ring seal (3 Qty.) (5MK250100)
6. -34.60x2.62 NBR 70 SH O-Ring seal (1 Qty.) (6MK250100)

1.*-Inlet Options

1.1 Inlet Cover
Body = Standard (11BS150100)
1.2 Inlet Relief
SMR1-080 – (12SMR1250080)–Range 63-125 bar
Setting 80 bar
SMR2-125 – (12SMR2250120)–Range 100-160 bar
Setting 125 bar
SMR3-175 – (12SMR3250175)–Range 125-250 bar
Setting 175 bar
SMR4-220 – (12SMR4250220)–Range 200-315 bar
Setting 220 bar
1.3 Ports Plug
PA1 = G3/4 Top and side input - (13PA1150100)
PA2= G1 Top and side input –(13PA2150100)
1.4 Inlet Valve
PAC =Inlet anti-cavitation valve –(14PAC150100)
PP(SP) = Relief valve blanking plug –(14PSP150100)

2.*- Working Options

2.1 Working Section
PA= Without ports valve prearrangement,
with parallel circuit - Body (21BSPA250100)
2.2 Spool Options
1A -(22SS250110) – 3 Positions ,Double acting
2A -(22SS250120) – 3 Positions ,Double acting
A to tank B Blocked
3A -(22SS250130) – 3 Positions ,Double acting
B to tank A blocked
4A -(22SS250140) – 3 Positions ,Double acting
A and B tank
5A -(22SS250150) – 3 Positions ,Single acting on
A (A to tank)
6A -(22SS250160) – 3 Positions ,Single acting on
B (B to tank)
2.3 Lever Options
L =Standard HandLever (L=120mmxM8) - (7L040100)
JL=Joystick lever for two sections operation-(5JL 080100)
STL=Standard Lever –(23STL150100)
2.4 Port Relief Valves
Anti-Shock Valve
YAS (T1-50) – (24YAC150050)–Range 35-70 bar
Setting 50 bar
YAS (T1-100) – (24YAC150100)–Range 63-220 bar
Setting 100 bar
YAS (T1-200) – (24YAC150200)–Range 180-350 bar
Setting 200 bar
Anti-Shock and Anti-Cavitation Valve
YAA (T1-63) – (24YAA150063)–Range 35-70 bar
Setting 50 bar
YAA (T1-100) – (24YAA150100)–Range 63-220 bar
Setting 100 bar
YAA (T1-200) – (24YAA150200)–Range 180-350 bar
Setting 200 bar
YAC - Anti Cavitation– (24YAS150100)
YP- A and B ports valve blanking plug (24YP150100)
DST-A and B ports valve blanking plugs with
connection to tank–(24DST150100)
2.5 Ports Plug Options
PL1 =Plug for single action spool for 2A-3A, G3/4
(25PL1150100)
PL2 =Plug for single action spool for 2A-3A, G1
(25PL2150100)
2.6 Spool Positioners
SR=Spring Return in neutral position – (26SR150100)
D =Detent in position 1, neutral and 2 -(26D150100)
150P=ON/OFF Pneumatic – (2645P150100)
150EP=12 VDC ON/OFF electro-pneumatic –
(2680EP150112)
24 VDC ON/OFF electro-pneumatic –
(2680EP150124)

3.*- Working Options

3.1 Working Section
Body = Standard (31BS250100)
3.2 Output Plug
PT1 =G1 Top and Side output (32PT1250100)
3.3 Circuits Options
CO =G1/8 Carry–Over Connector (33CO250100)

INLET COVER- PUMP SIDE

LH Inlet Valve Options

Type No: **SD**

Sectional Appearance

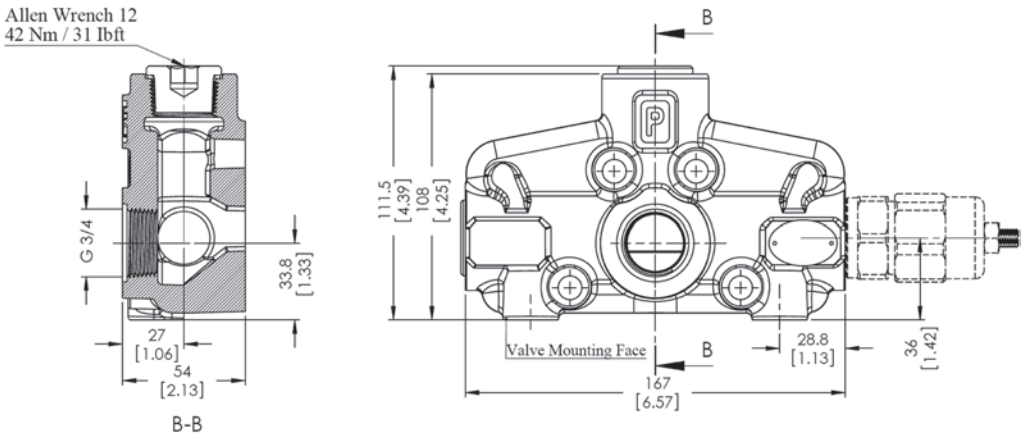

Type No: **TD**

Sectional Appearance

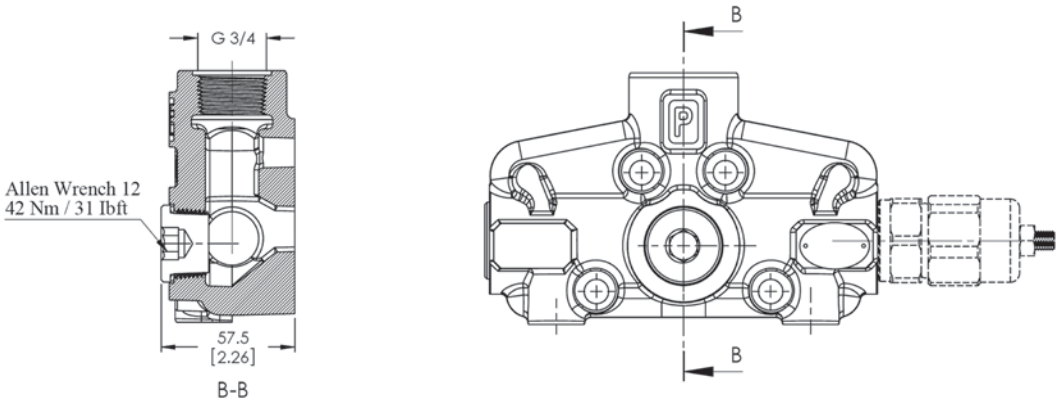

Hydraulic Diagram

Type No: **SD**

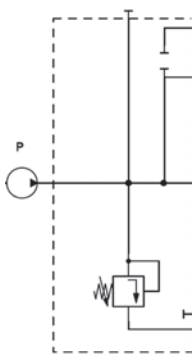

Type No: **TD**

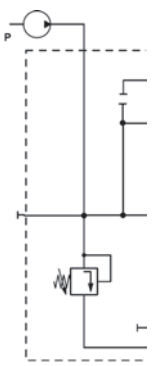

INLET COVER- PUMP SIDE

RH Inlet Valve Options

Type No: **RA**

Sectional Appearance

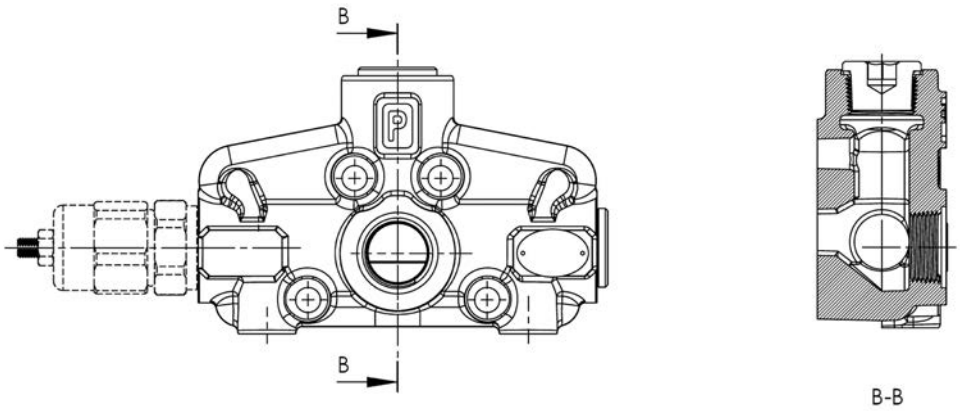

Type No: **RB**

Sectional Appearance

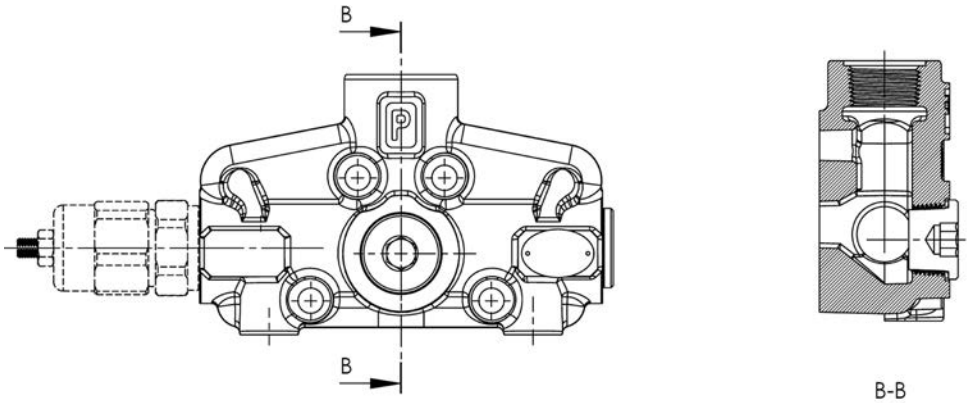

Hydraulic Diagram

Type No: **RA**

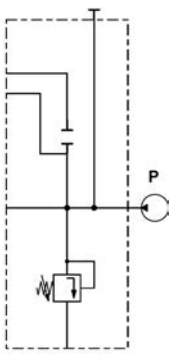

Type No: **RB**

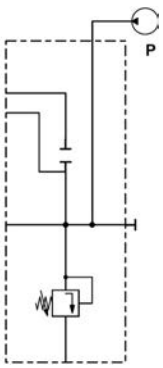

SPOOL OPTIONS

Spool Type - 1A

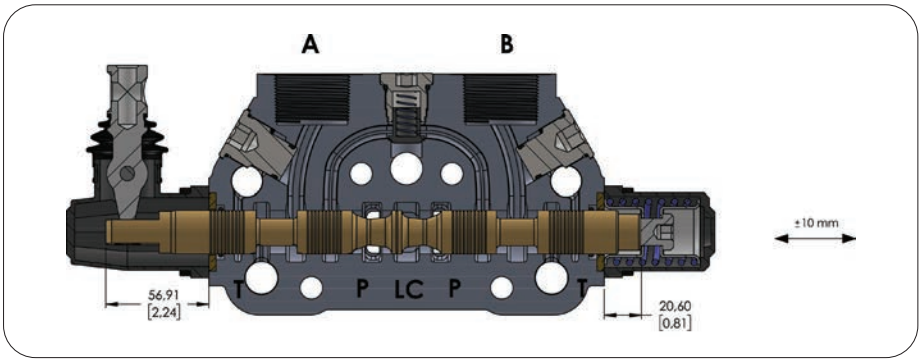

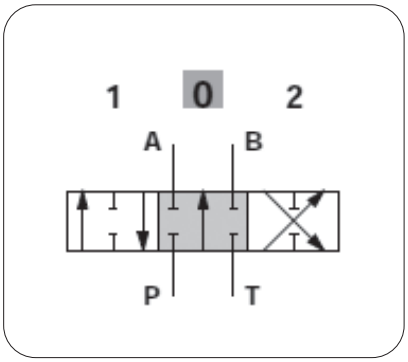

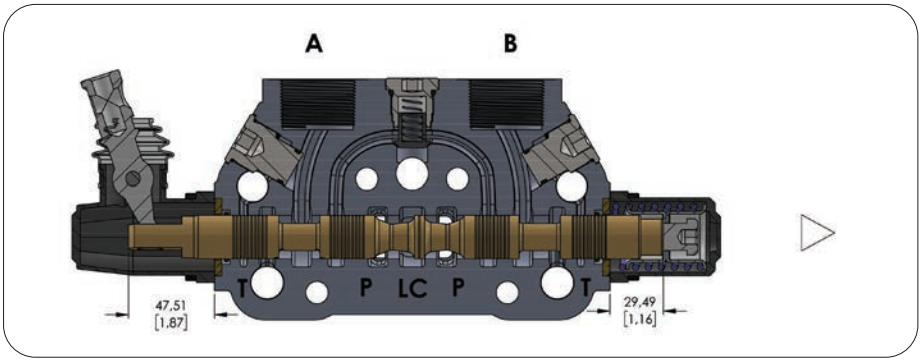

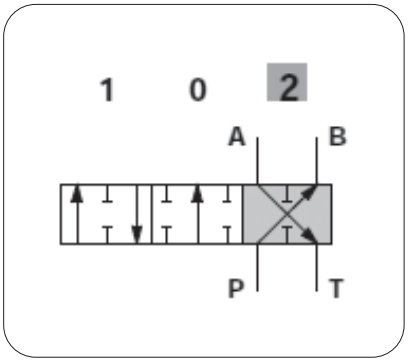

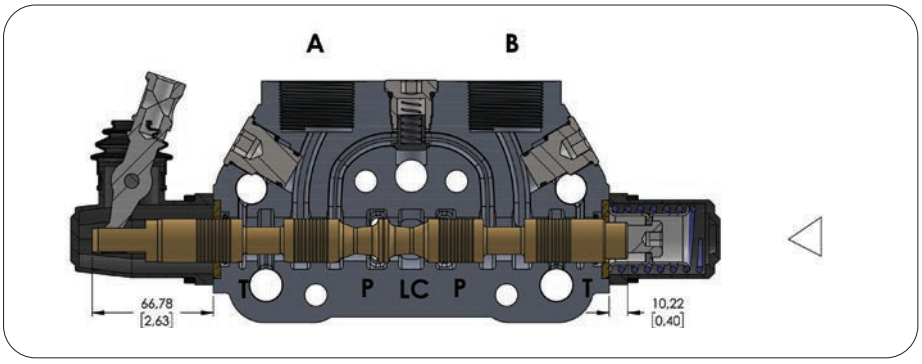

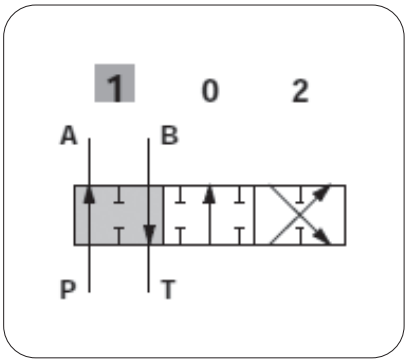

Performance Curve And Data

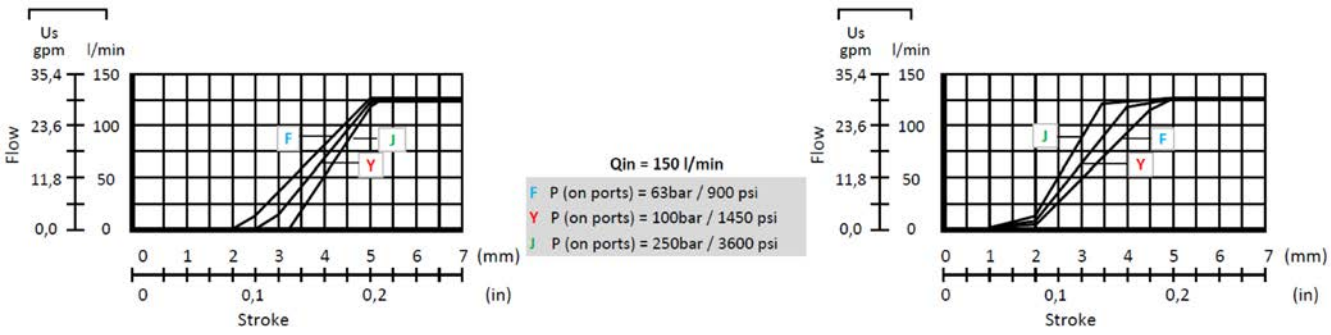

SPOOL OPTIONS

Spool Type - 2A

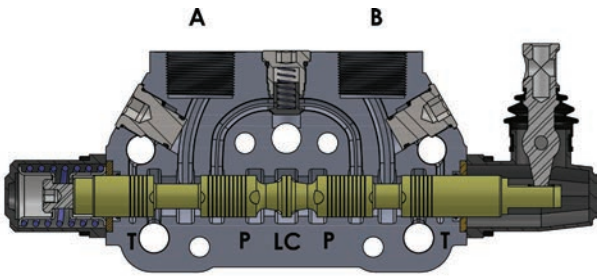

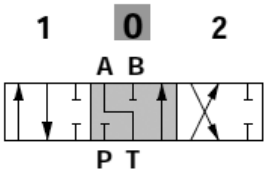

Spool Type - 3A

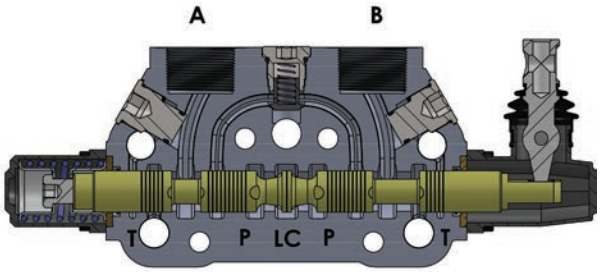

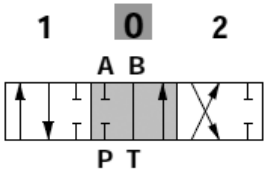

Spool Type - 4A

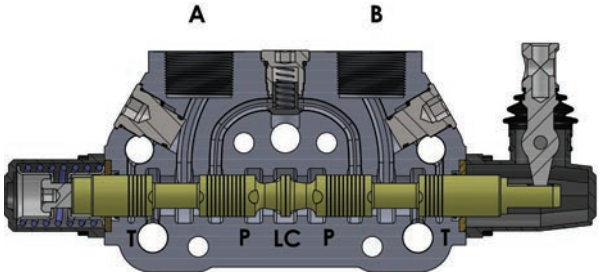

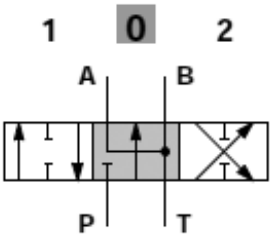

Spool Type - 5A

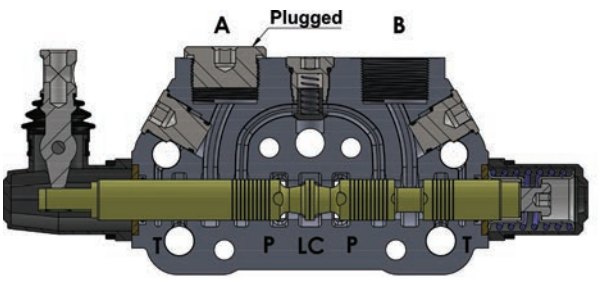

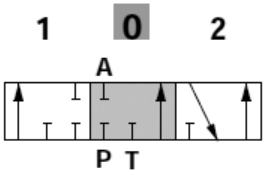

"B" port plugged

Spool Type - 6A

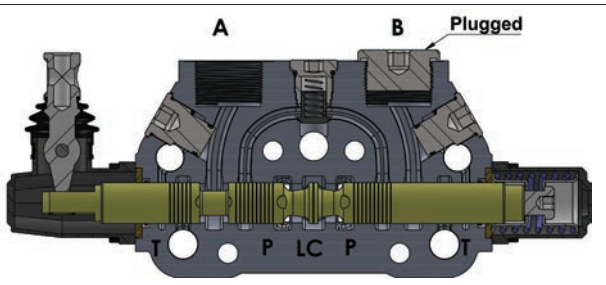

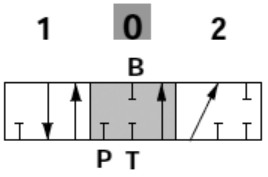

"A" port plugged

SPOOL POSITIONERS – SIDE OF RETURN

With Spring Return in Neutral Position

Kit No: **SR**

Sectional Appearance

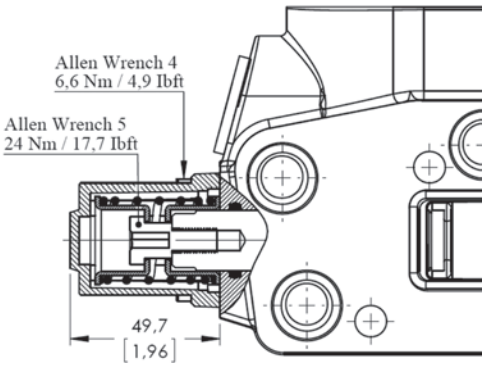

Diagram



With Detent

Kit No: **D**

Sectional Appearance

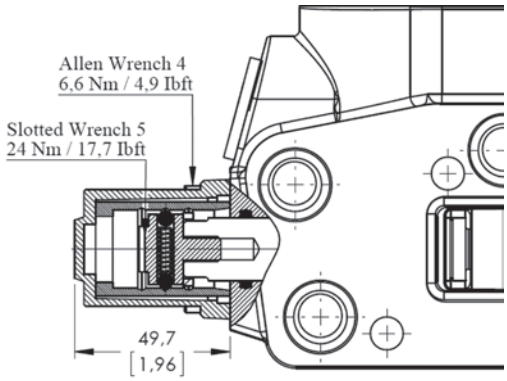

Diagram

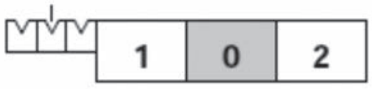

Force - stroke diagram

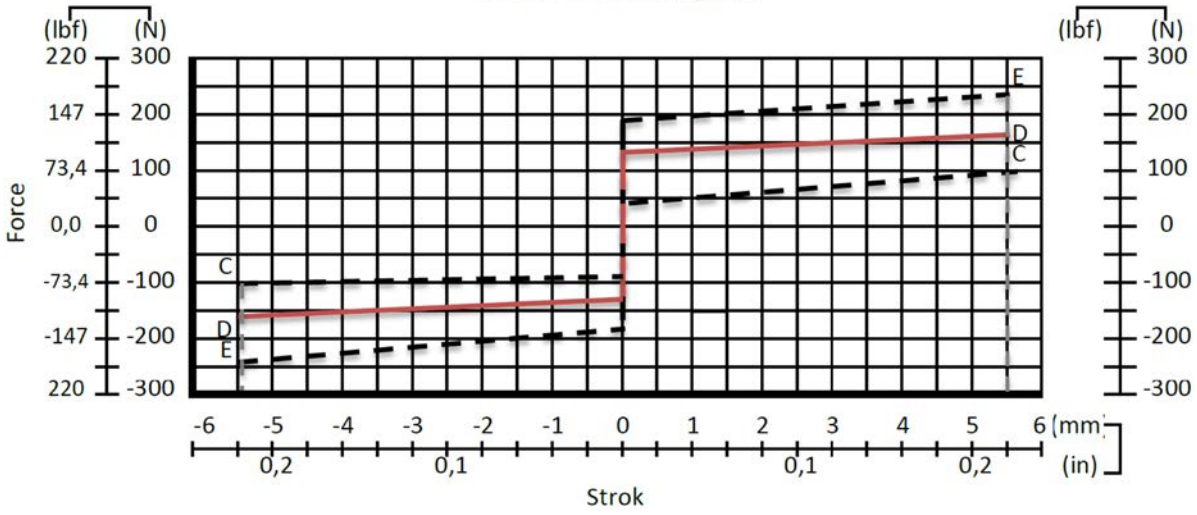

SPOOL POSITIONERS – SIDE OF RETURN

ON/OFF Pneumatic Control

Kit No: **250P**

Sectional Appearance

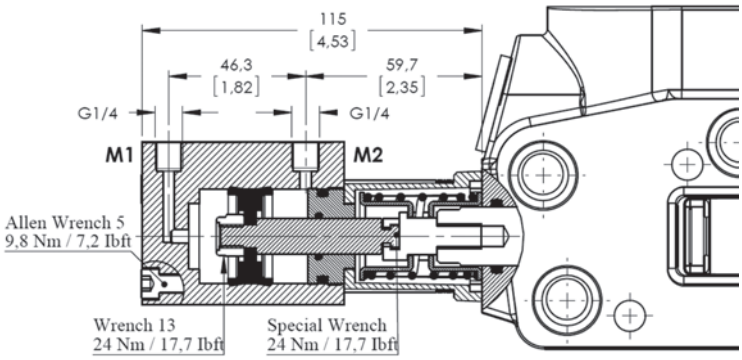

Diagram

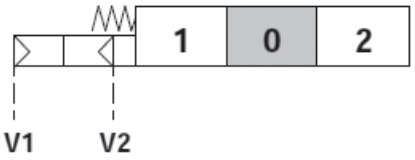

Operating Features
Pilot Pressure .....: 6 Bar (Max. 10) / 87 Psi (Max. 145)

ON/OFF Electro-Pneumatic Control

Kit No: **250EP**

Sectional Appearance

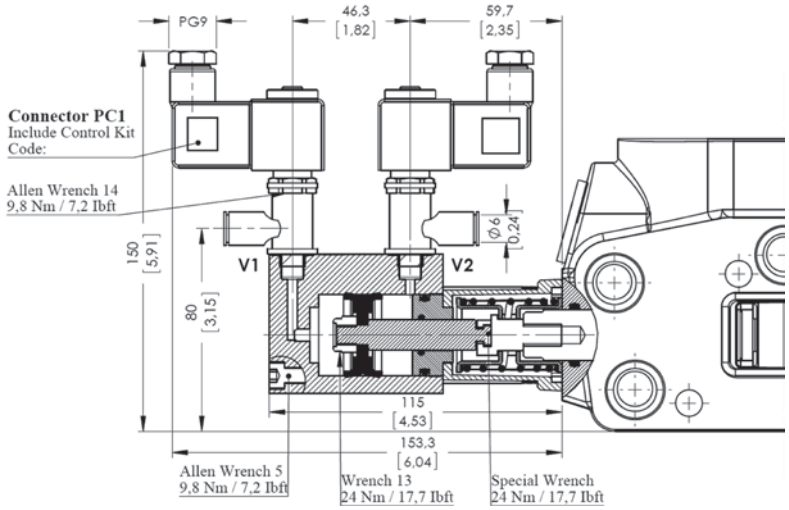

Diagram

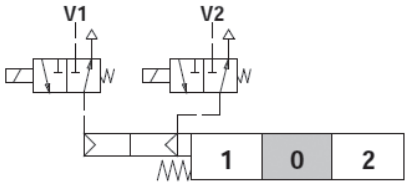

Operating Features
Pilot Pressure .....: 6 Bar (Max. 10) / 87 Psi (Max. 145)
Selenoid Operating Features
Nominal Voltage.....: 12VDC / 24 VDC
Power Rating.....: 6 W

WORKING SECTION KIT

With Port Valves Type

Kit No: **AA**

Sectional Appearance

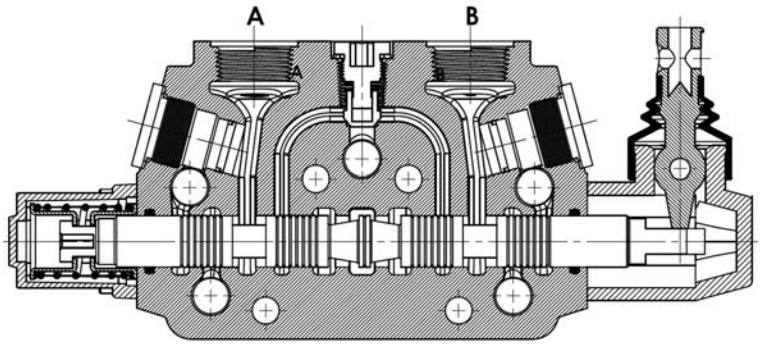

Diagram

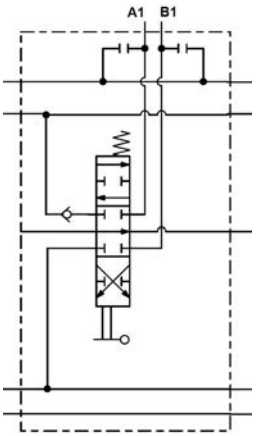

With Port Valves Type

Kit No: **AB**

Sectional Appearance

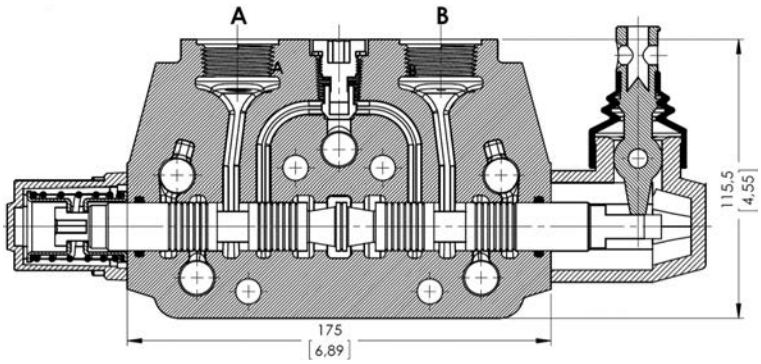

Diagram

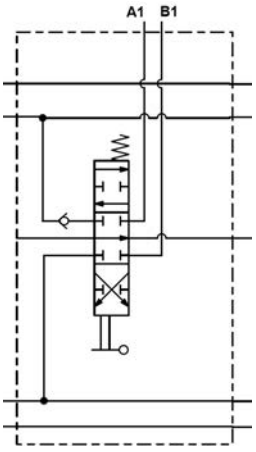

SPOOL POSITIONERS – SIDE OF LEVER CONTROL

Lever Controls

Kit No: **STL - L0**

Sectional Appearance

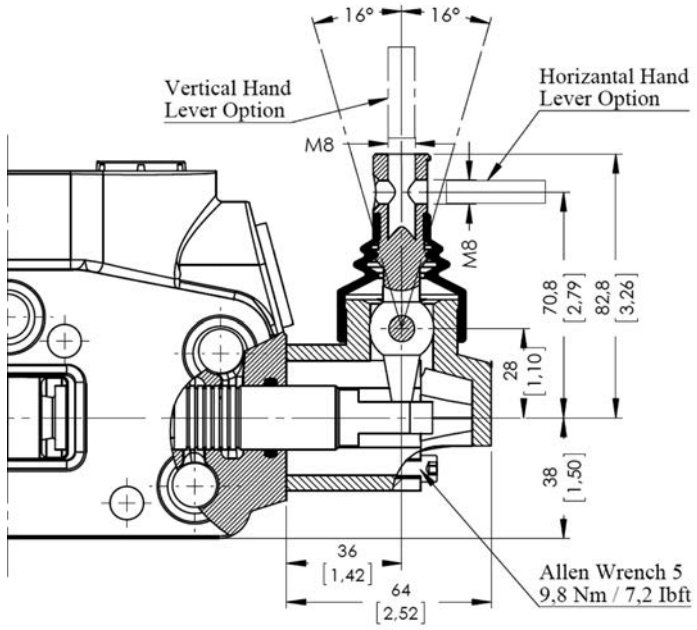

Diagram

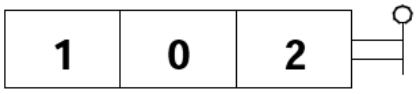

Kit No: **STL - L180**

Sectional Appearance

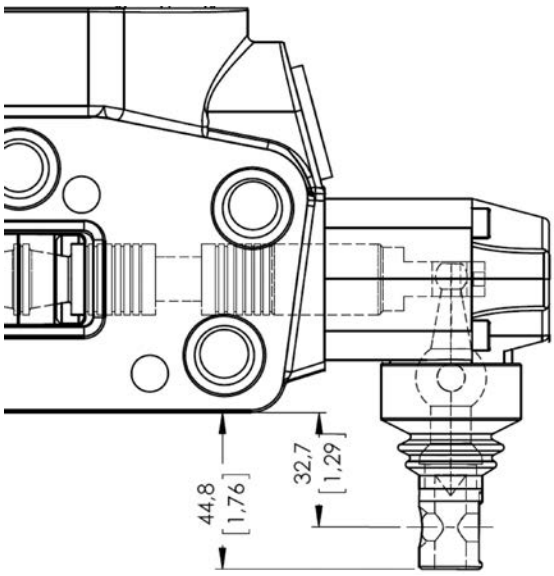

Diagram

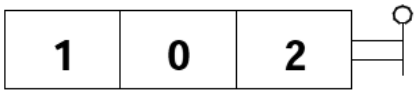

Note: Arm lever pivot box is aluminium cap protected. And it can be rotated 180º.

SPOOL POSITIONERS – SIDE OF LEVER CONTROL

Lever Controls - Joystick

Kit No: **JL**

Exploded View | Diagram

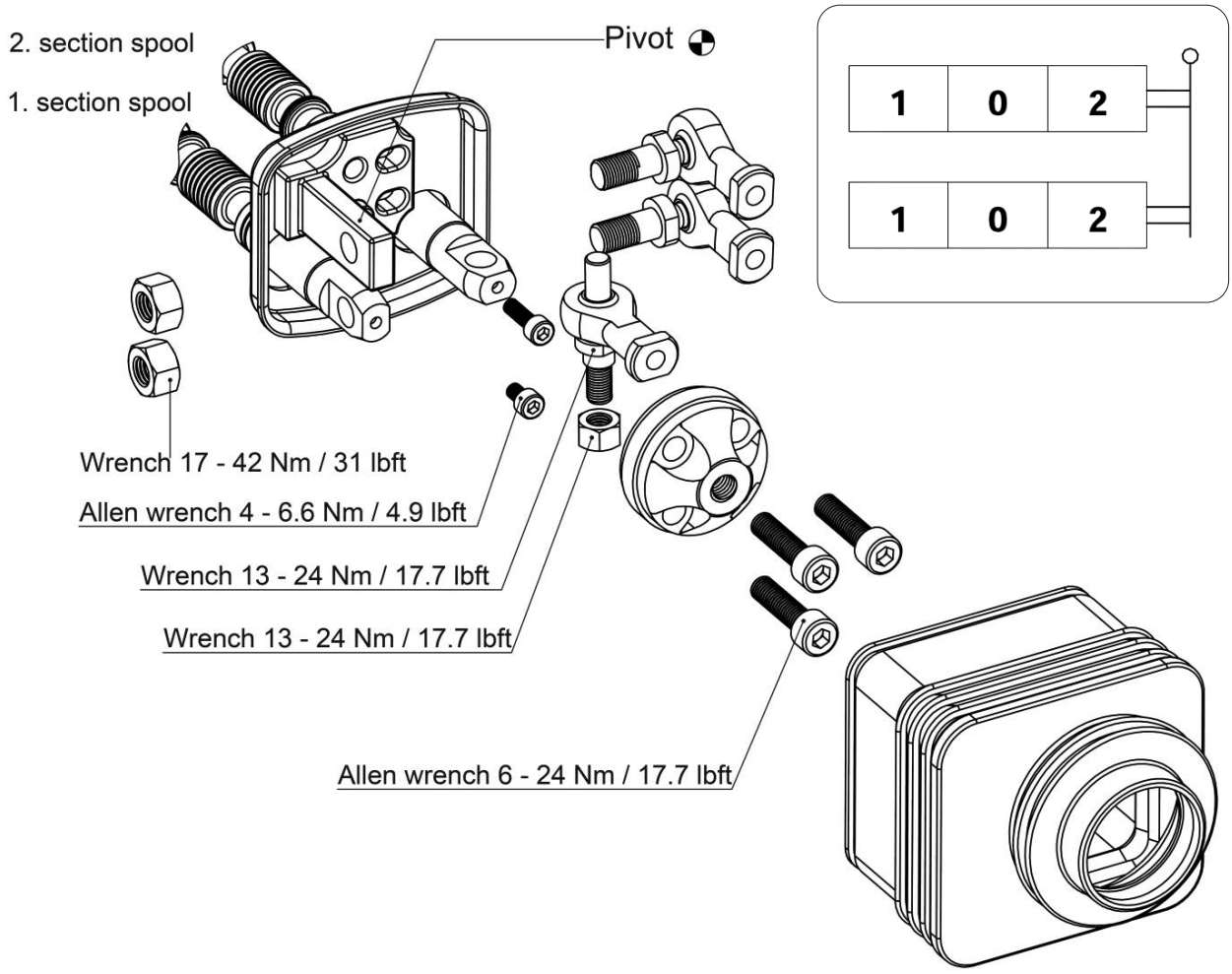

Operation Angle:

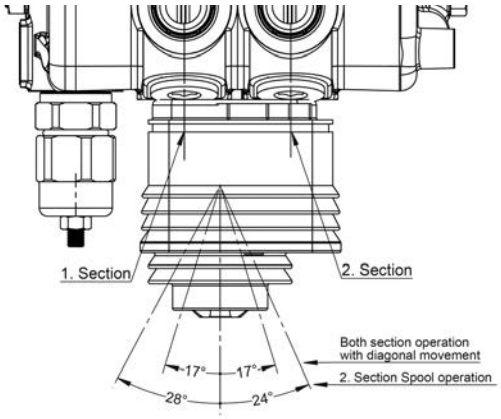

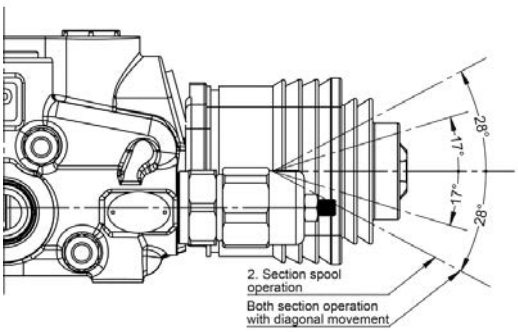

SPOOL POSITIONERS – SIDE OF LEVER CONTROL

Lever Controls - Joystick

Dimensions and movement sceme

Type No: **JL1** — **Application:** Pivot placed down on the Left

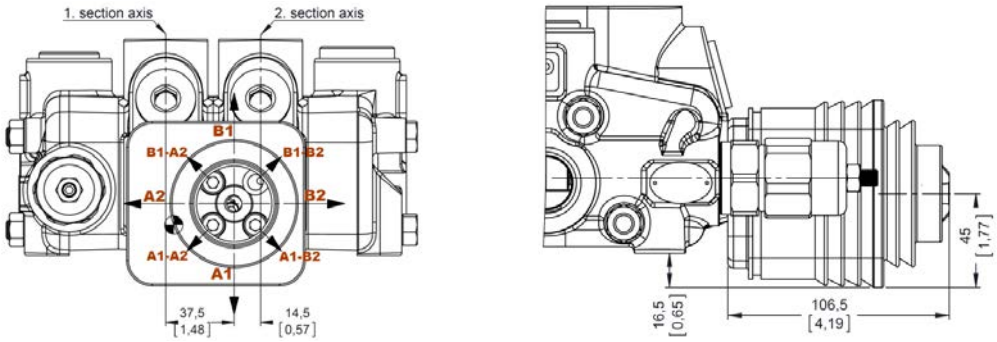

Type No: **JL2** — **Application:** Pivot placed down on the right

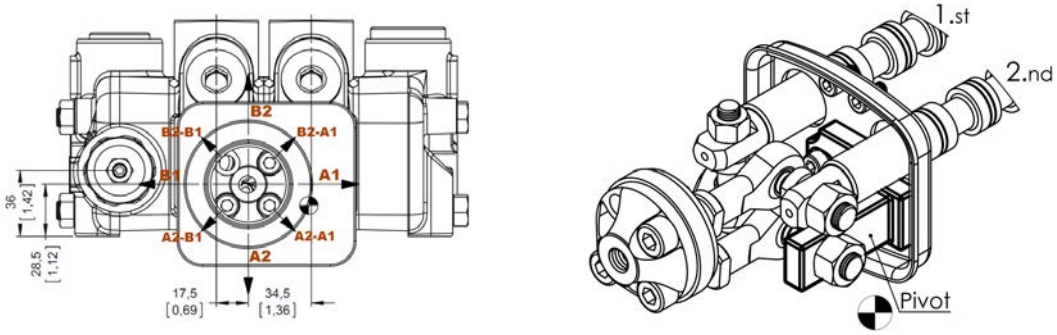

Type No: **JL3** — **Application:** Pivot placed above on the Left

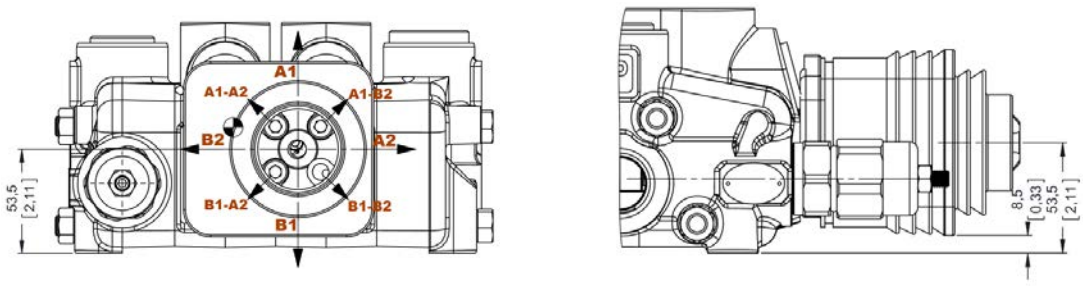

Type No: **JL4** — **Application:** Pivot placed above on the right

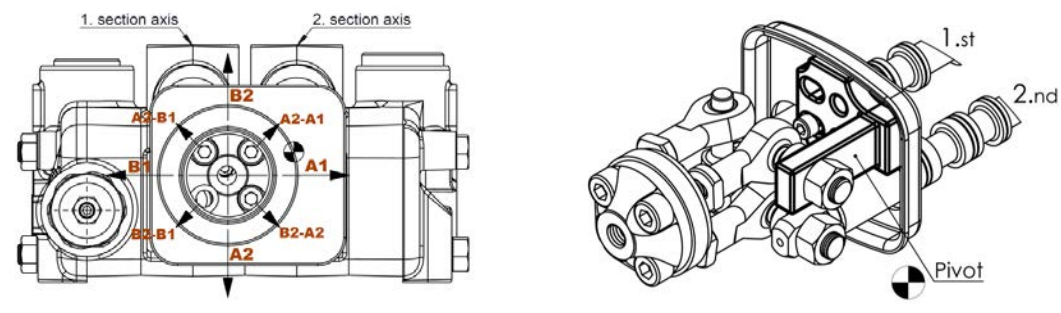

OUTLET COVER - TANK SIDE

Output Cover Options

Kit No: **SO**

Sectional Appearance

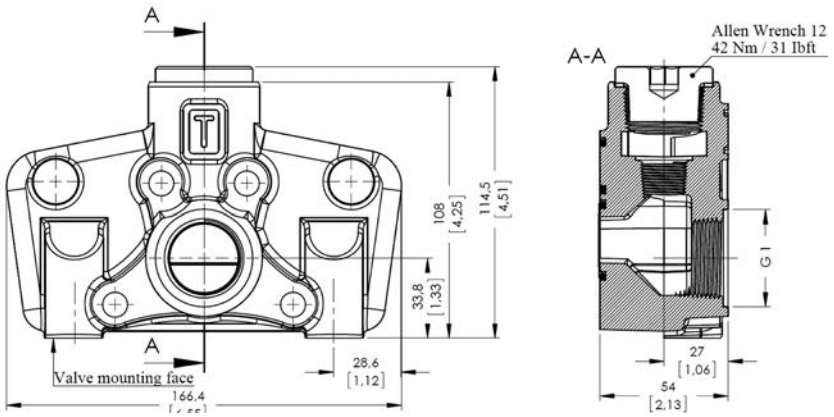

Type No: **TO**

Sectional Appearance

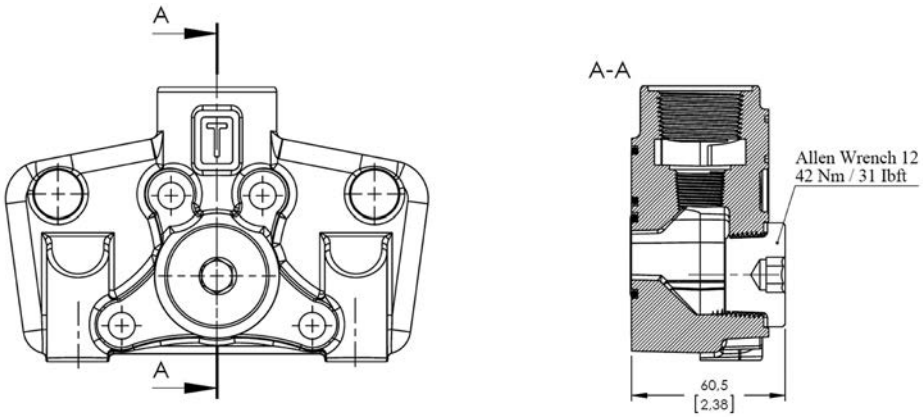

Hydraulic Diagram

Type No: **SO**

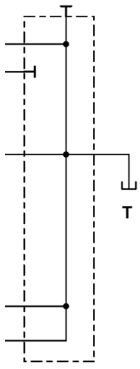

Type No: **TO**

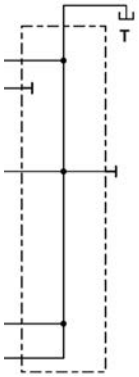

OUTLET COVER - TANK SIDE

Output Cover Options

Kit No: **TCO**

Sectional Appearance

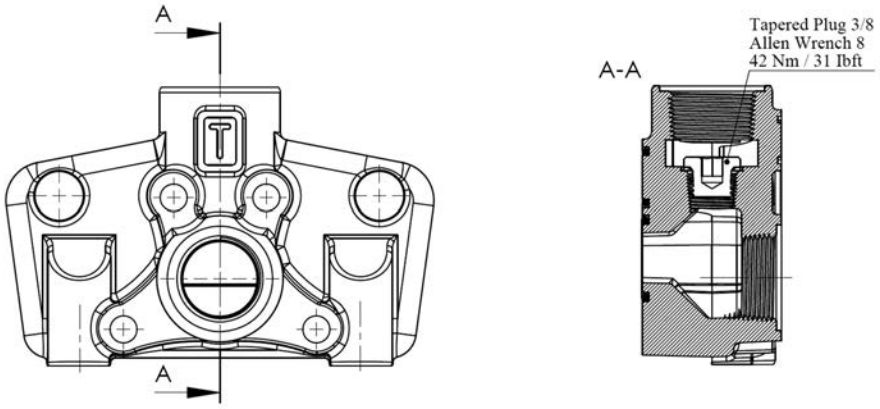

Kit No: **TC**

Sectional Appearance

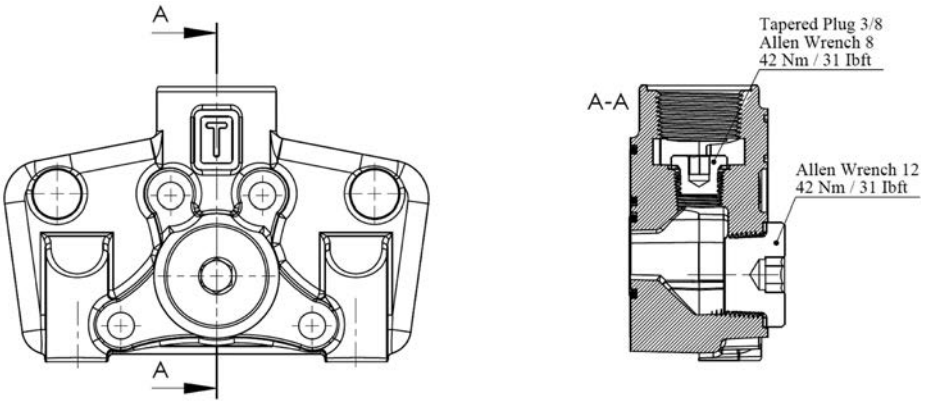

Hydraulic Diagram

Type No: **TCO**

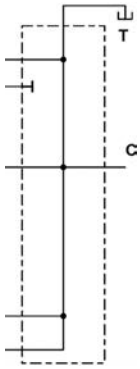

Type No: **TC**

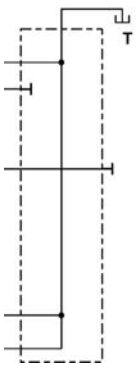

PORT VALVES OPTIONS

Anti Shock Valves

Code:

YAS-1 (T1-100)

- **Pressure Setting in Bar**
- **Adjusting type T=With screw , L=Valve Set / Spring Type (1,2,3)**
- **1 = Mounted Port A , 2 = Mounted Port B , 3 = Mounted Port A and B**

Hydraulic Diagram

Kit No: **YAS1**

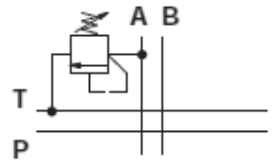

Kit No: **YAS2**

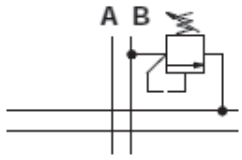

Kit No: **YAS3**

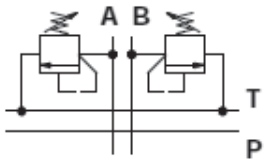

Adjustment Type on Valve:

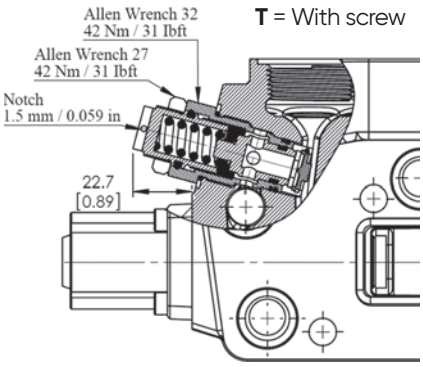

T = With screw

L = Valve set

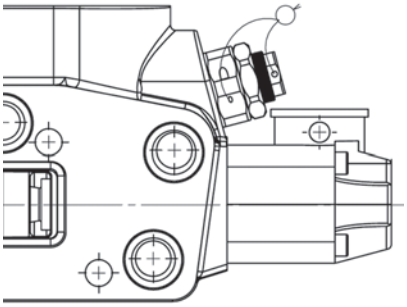

Performance Data:

Spring No=1 , Setting 50 bar / 725 psi

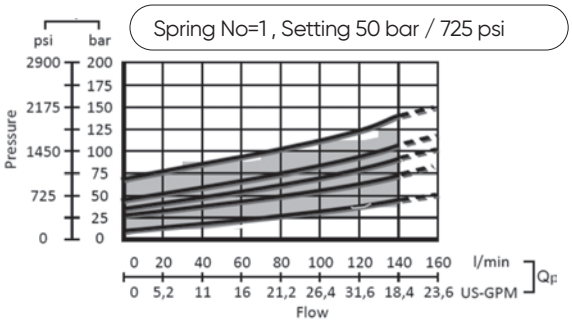

Spring No=2 , Setting 100 bar / 1450 psi

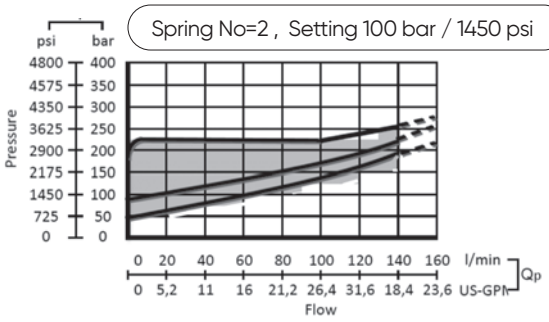

Spring No=3 , Setting 200 bar / 2900 psi

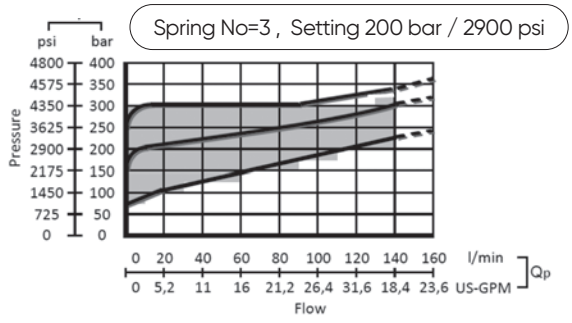

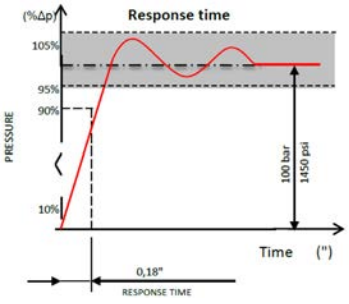

PORT VALVES OPTIONS

Anti shock And Anti Cavitation Valves

Code:

YAA-1 (T1-100)

- Pressure Setting in Bar
- Adjusting type T=With screw , L=Valve Set / Spring Type (1,2,3)
- 1 = Mounted Port A , 2 = Mounted Port B , 3 = Mounted Port A and B

Hydraulic Diagram

Kit No: **YAA1**

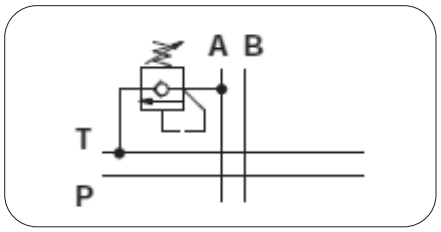

Kit No: **YAA2**

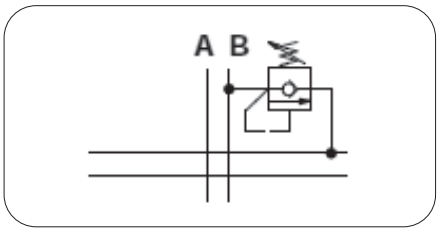

Kit No: **YAA3**

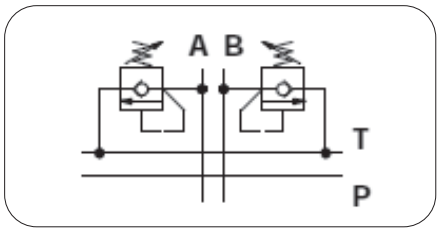

Adjustment Type on Valve:

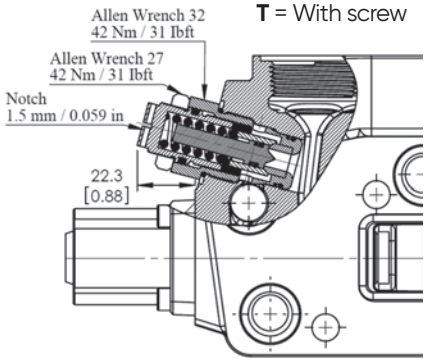

T = With screw

L = Valve set

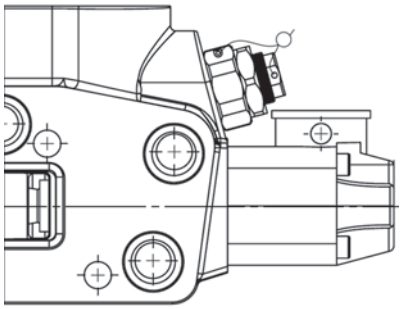

Performance Data:

Spring No=1 , Setting 63 bar / 900 psi

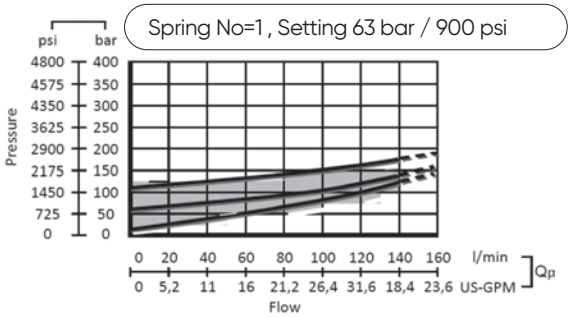

Spring No=2 , Setting 100 bar / 1450 psi

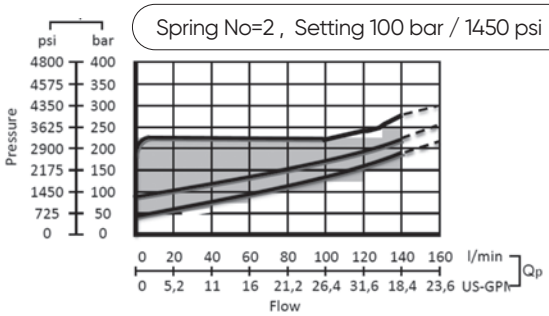

Spring No=3 , Setting 200 bar / 2900 psi

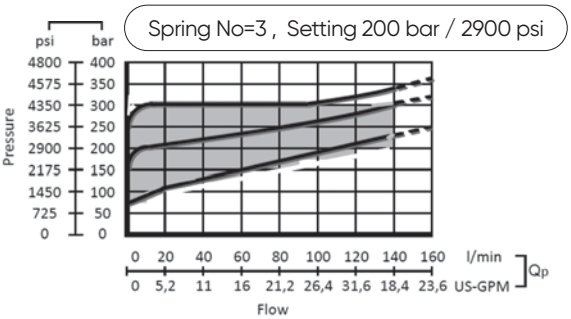

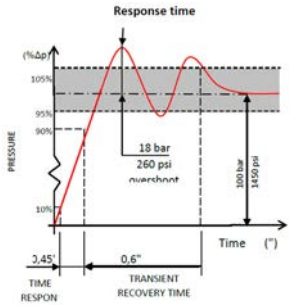

PORT VALVES OPTIONS

Anti Cavitation Valves

Code:

YAC-1 → **1 =** Mounted Port A , 2=Mounted Port B , 3=Mounted Port A and B

Hydraulic Diagram

Kit No: **YAC1**

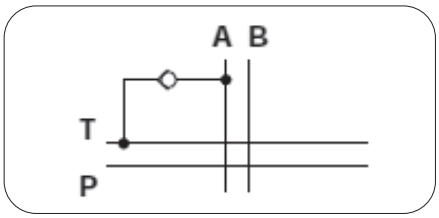

Kit No: **YAC2**

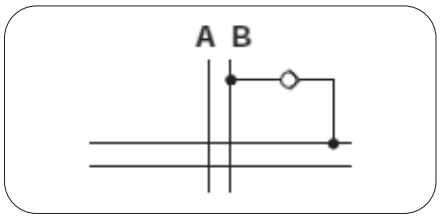

Kit No: **YAC3**

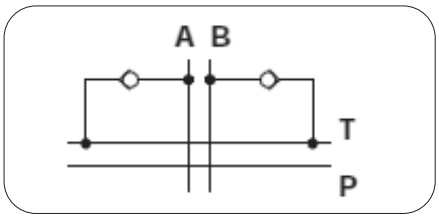

Adjustment Type on Valve And Data:

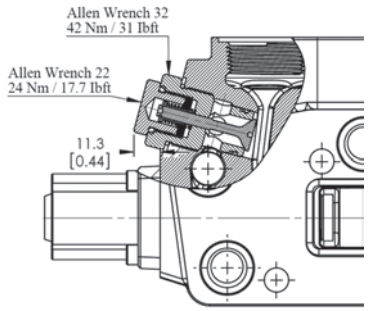

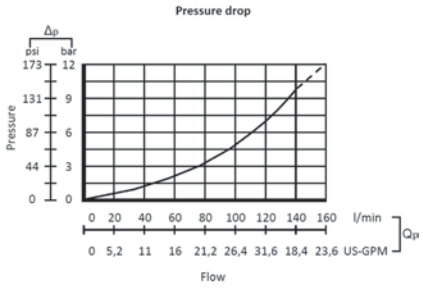

Valve Blaking

Plug with tank connection

DST-1 (1:Mounted port A – 2:Mounted port B)

Sectional Appearance

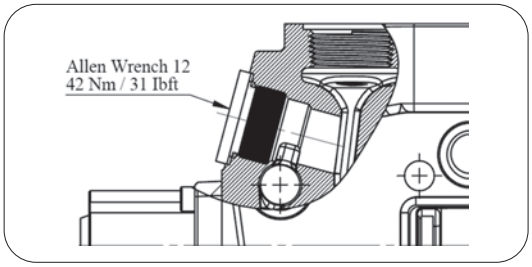

Hydraulic Diagram

DST1

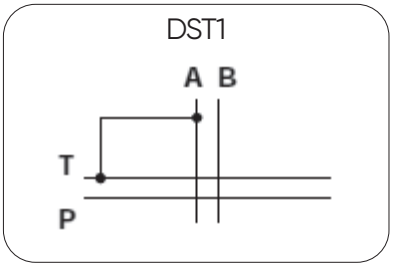

DST2

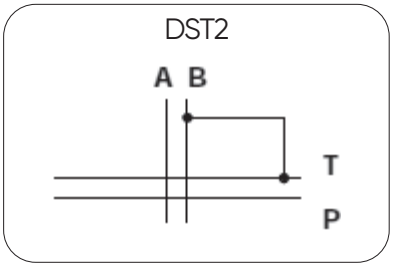

Plug

YP-1 (1:Mounted port A – 2:Mounted port B – 3:Mounted port A and B)

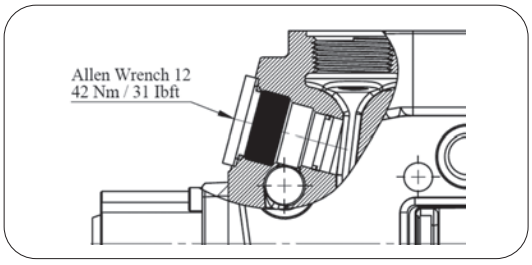

YP1

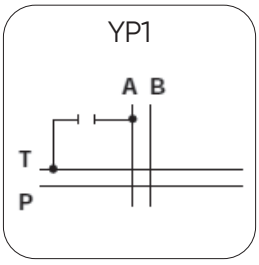

YP2

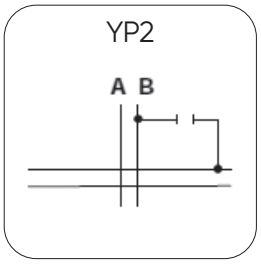

YP3

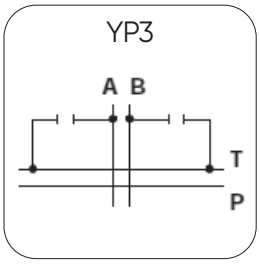

INSTALLATION AND MAINTENANCE

The ORV-PD250 valve is assembled and tested as per the technical specification of this catalog. Before the final installation on your equipment, follow the below recommendation:

• The valve can be assembled in any position, in order to prevent body deformation and spool sticking mount the product on a flat surface;

• In order to prevent the possibility of water entering the lever box and spool control kit, do not use high pressure wash down directly on the valve;

• Before painting, ensure plastic port plugs are tightly in place.

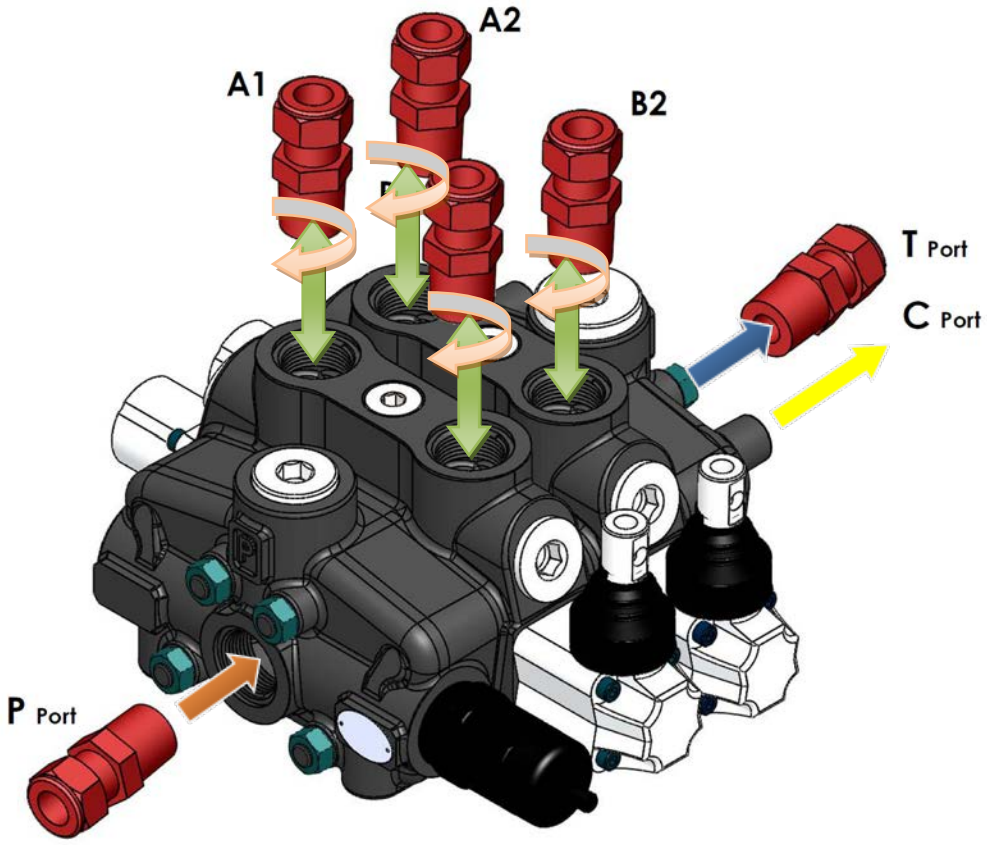

Threads Type (Nm / lbft)	P Port	A and B Port	T Port
BSP (ISO 228/1)	G 1	G 1	G 1/4
With O--Ring seal	70 / 51.6	70 / 51.6	100 / 73.7
With copper washer	70 / 51.6	70 / 51.6	90 / 66.3
With steel and rubber washer	70 / 51.6	70 / 51.6	100 / 51.6
BSP (ISO 228/1)	G 1/4	G 1/4	G 1/4
With O--Ring seal	100 / 73.7	100 / 73.7	100 / 73.7
With copper washer	90 / 66.3	90 / 66.3	90 / 66.3
With steel and rubber washer	100 / 51.6	100 / 51.6	100 / 51.6
UN--UNF (ISO 11926--1)	1 5/16--12 UNF--2B	1 1/16--12 UNF--2B	1 5/16--12 UNF--2B
With O--Ring seal	150 / 110.6	95 / 70	150 / 110.6

TECHNICAL DATA

Ports Dimensional Data

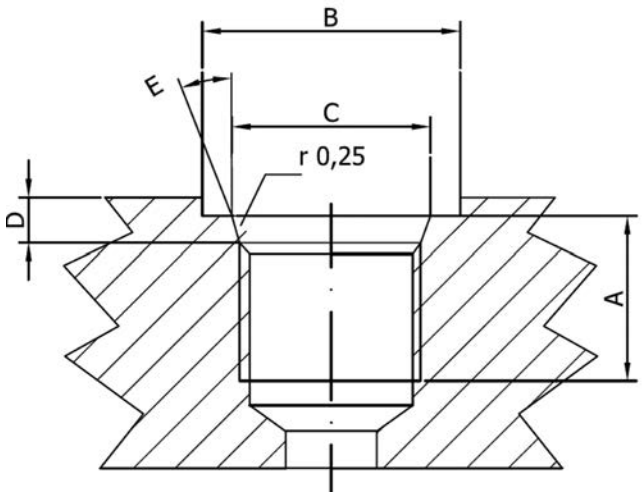

SAE UN-UNF (ISO 725)						
Dimensions		7/8-14 UNF SAE10		1"1/16-12 UN SAE12		1"5/16-12 UN SAE16	
mm	in						
A		17	0,67	20	0,79	20	0,79
B		34	1,34	41	1,61	49	1,92
C		23,9	0,94	29,2	1,15	35,5	1,40
D		2,5	0,10	3,3	0,13	3,3	0,13
E		15°		15°		15°	

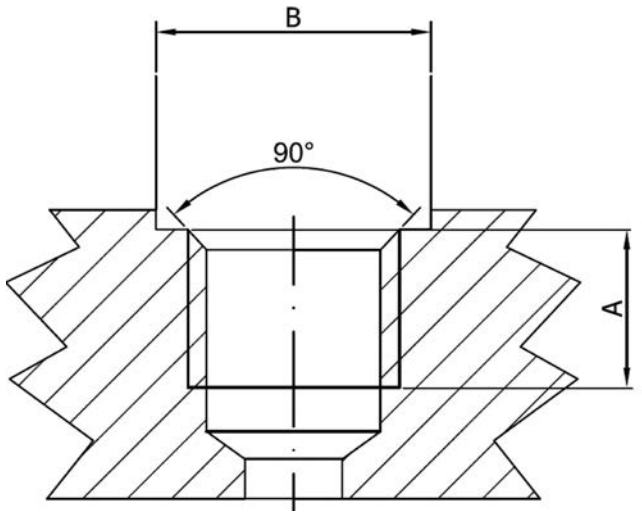

BSP (ISO 228)						
Dimensions		G 1/2"		G3/4		G1	
mm	in						
A		16	0,63	18	0,71	20	0,79
B		27	1,06	33	1,30	40	1,57

ORVAL HYDRAULIC

SPECIAL TRACTOR
VALVES

ORV-TV50





CONTENTS

Working Conditions	3
Dimensional Data	3
Hydraulic Circuit	3
Performance Data And Curve	3
Inlet Relief Options	3
Ordering Codes	3
Spool Options	3
Spool Positioners – Side of Return	3
Spool Positioners – Side of Lever Control	3
Spool Positioners – Side of Lever Control	3
Spool Positioners – Side of Lever Control	3
Outlet Port Options	3
Installation and Maintenance	3
Technical Data	3

Additional Informations

Note: This catalog shows the product in the most standard configurations. For Other Configurations, more detailed information or special request, Please contact Customer Service Dpt.
Warning!: All specifications of this catalog refer to the standard product at this date (01/2017) . ORVAL, oriented to a continuous improvement, reserves the right to discontinue, modify or revise the specifications, without notice.

ORVAL IS NOT RESPONSIBLE FOR ANY DAMAGE CAUSED BY
AN INCORRECT USE OF THE PRODUCT.

WORKING CONDITIONS

Nominal Flow Rating / Displacement	50 l/min	13,5 U.S.G.P.M
Maximum Working Pressure (Parallel Circuit)	315 Bar	4600 PSI
(Series Circuit)	250 Bar	3600 PSI
Max. Back Pressure	25 Bar	360 PSI
Oil Temperature with NBR Seals	-20 to 80 C°	-4 to 176 F °
with FPM (Viton) Seals	-20 to 100 C°	-4 to 212 F °
Oil Viscosity – Operating Range	From 10 to 75 mm2/s	From 10 to 75 cSt
Minumum / Maximum	10 / 400 mm2/s	10 / 400 cSt
Oil Filtration	≤30 µ	
Ambiant Temperature Range	-35 to 60 C°	-31 to 140 F °
Number Of Spools	1 to 7	
Internal Leakage (at 100 bar (1450 PSI), 40C° (110 F°), 46 cSt – A(B)–T)	3 cm3/min	0,18 in3/min
Max. Level Of Contamination	19/16 - ISO 4406	

Not: This catalogue shows technical specifications measured with mineral oil of 46 mm2/s-46 cSt viscosity at 40 C° temparture.

Features

• Simple, compact and heavy duty designed monoblock valves from 1 to 3 sections for open and closed center hydraulic systems.
• Fitted with a main pressure relief valve and a load check valve.
• Optionaly Carry-Over port only parallel circuit.
• Interchangeable spool diameter is 16 mm – 0,63 in.
• Available manual, pneumatic, hydraulic and electro-pneumatic spool control kits.

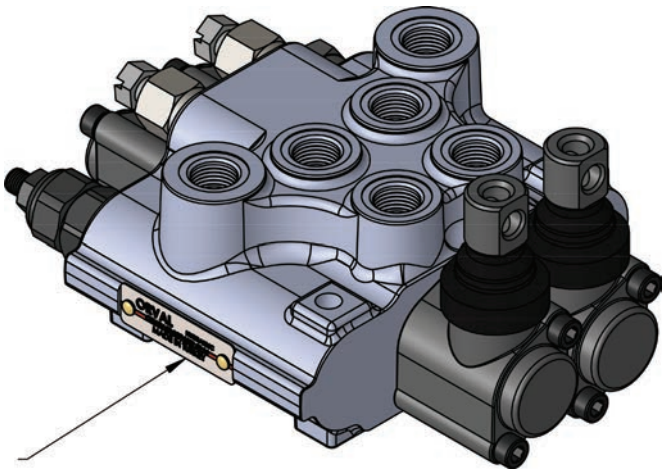

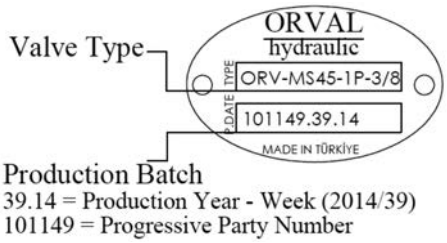

DIMENSIONAL DATA

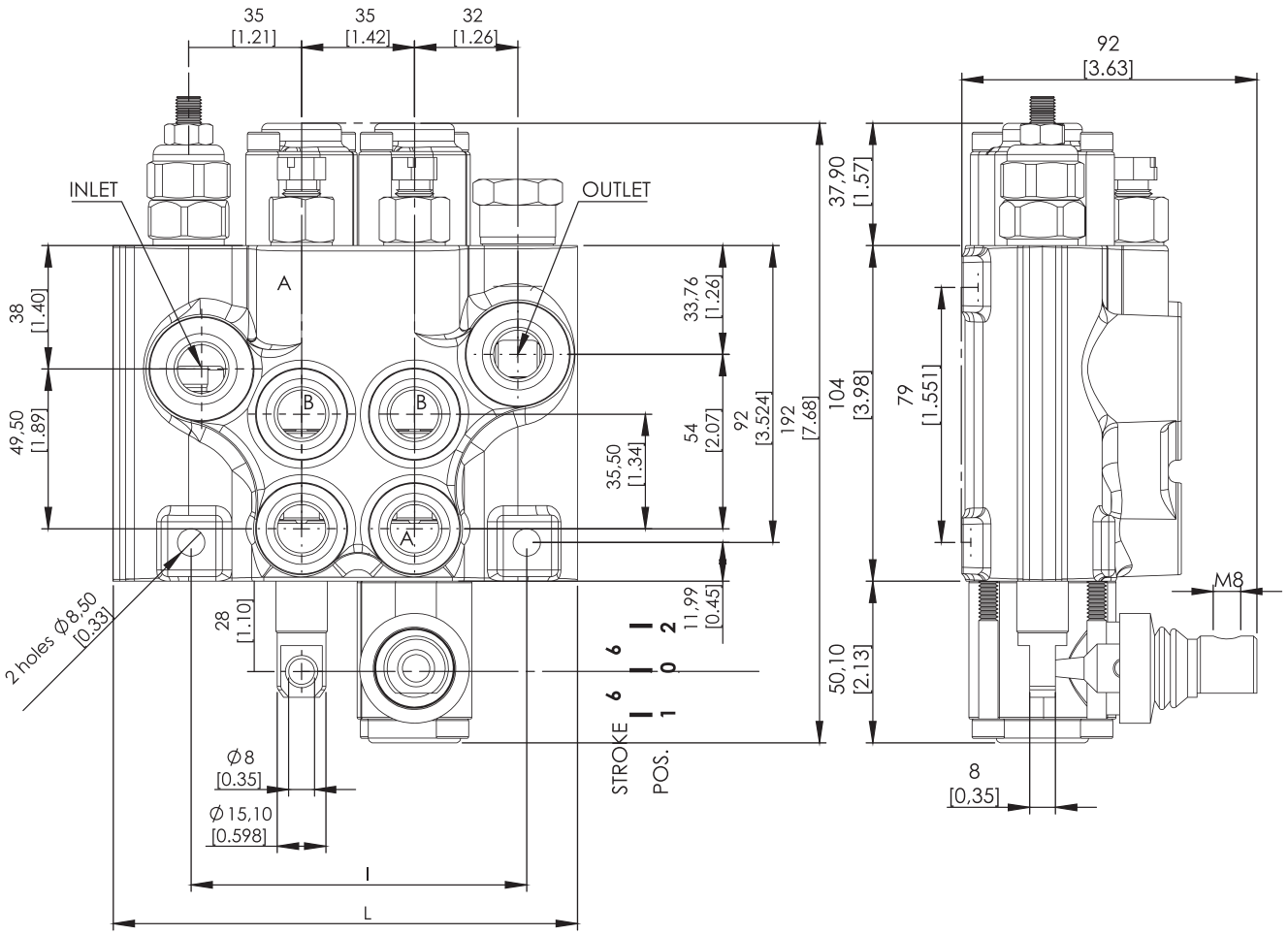

TYPE	A		B		Weight	
	mm	in	mm	in	Kg	lb
ORV- TV50-1P	68	2,67	105	4,12	2,80	6,16
ORV- TV50-2P	104	4,09	140	5,49	4,50	9,90
ORV- TV50-3P	140	5,51	175	6,86	6,30	13,86

STANDARD THREADS

PORT	BSP (Iso 228) 3/8" Series	UN-UNF (Iso 11926-1)	Metric (Iso 262)
P Inlet	G 3/8	3/4-16 UNF	M18x1.5
A-B Ports	G 3/8	9/16-18 UNF	M18x1.5
T Outlet	G 1/2	3/4-16 UNF	M18x1.5
Pneumatic	G 1/4	NPTF 1/8 - 27	NPTF 1/8 - 27
Carry-Over	G 3/8	3/4-16 UNF	G 3/8

HYDRAULIC CIRCUIT

Parallel - Standard Configurations With Side Inlet And Outlet Open Center

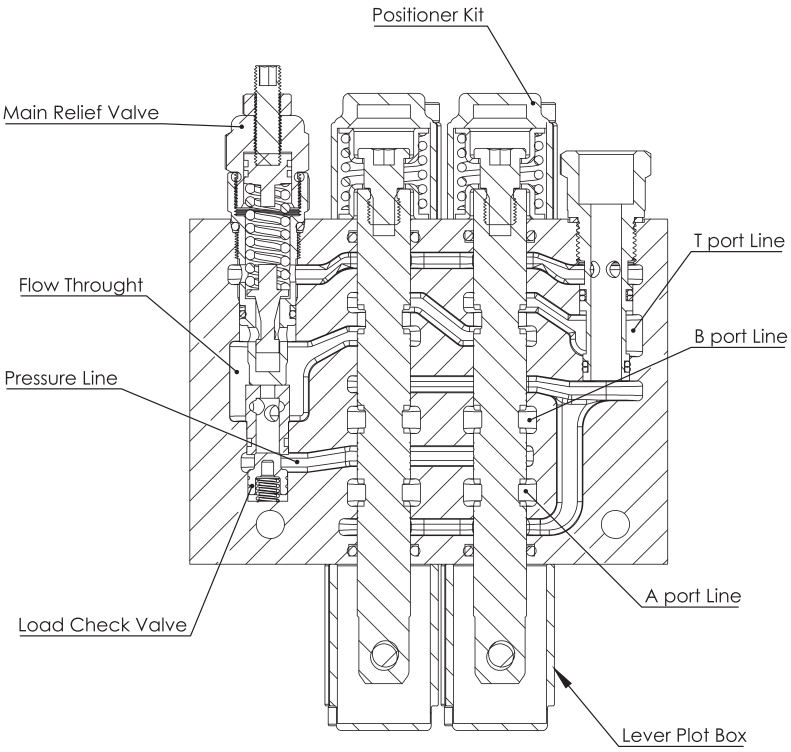

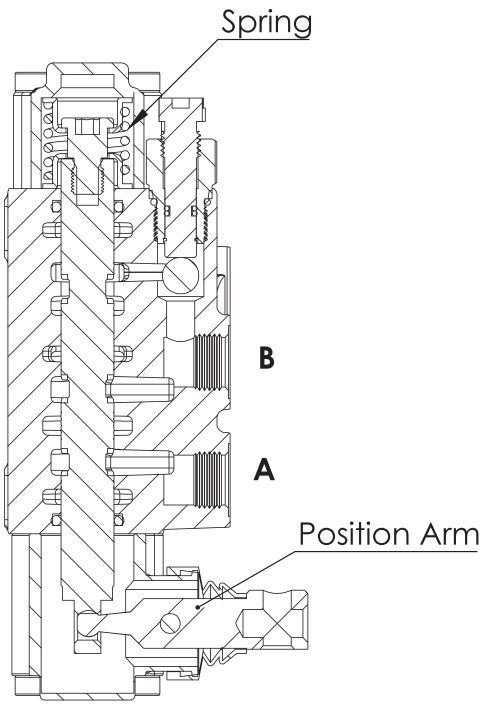

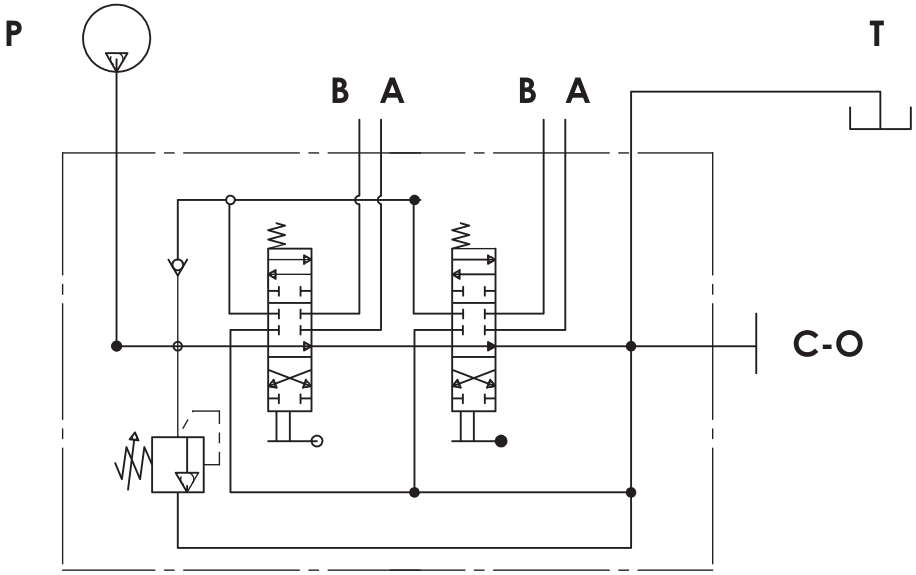

Code: ORV TV50-2P / SMR2-120 / 1A-SR-STL/1A-SR-STL/PA1/SGT

PERFORMANCE DATA AND CURVE

Open Center - Pressure Drop (P-T)

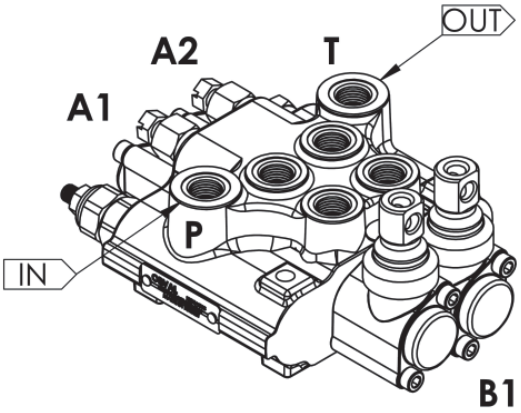

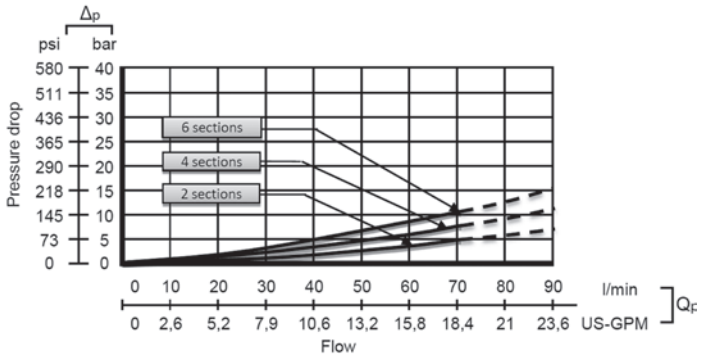

Inlet to Work Port - Pressure Drop (P-A/B)

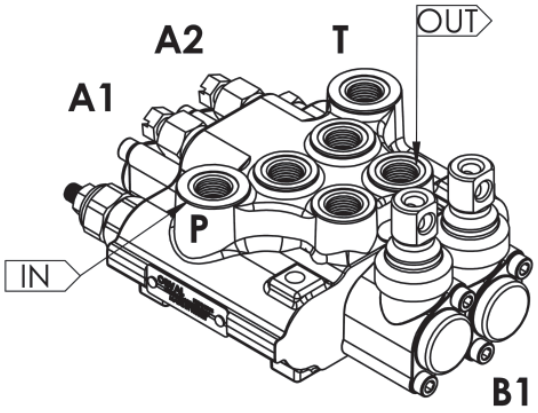

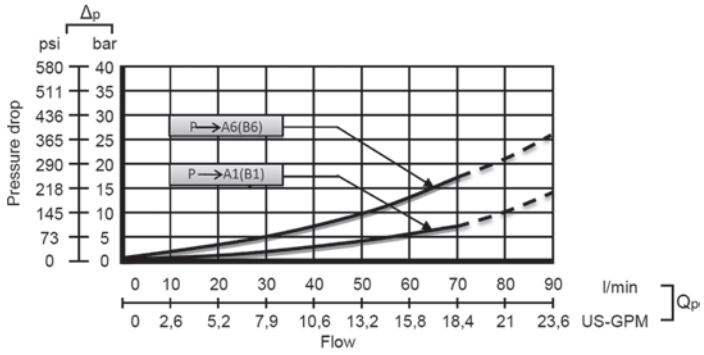

Work Port to Outlet - Pressure Drop (A/B-T)

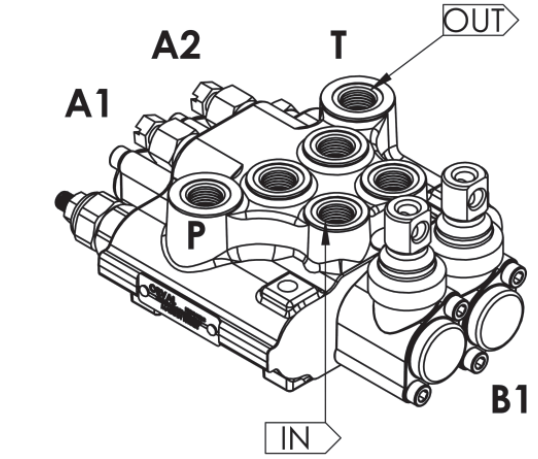

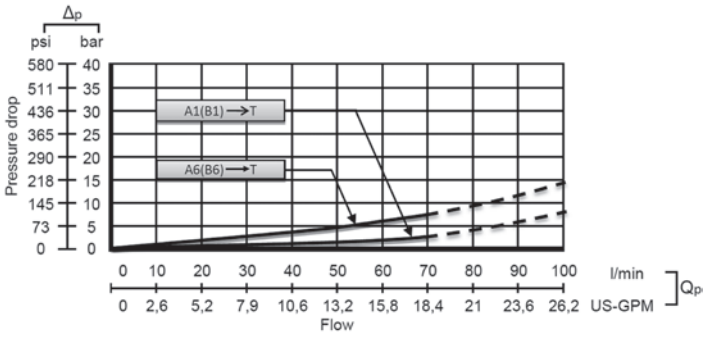

Note: Measured and chart value with spool type 1A.

INLET RELIEF OPTIONS

Direct Pressure Relief Valve

Code:

SMR2 – 120

- **Pressure Setting Bar in (Standard 120 bar)**
- **Standard Main Relief Spring Type -2**

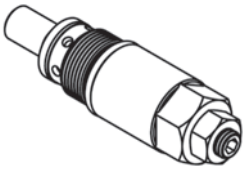

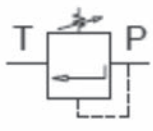

Performance Data

Spring Type Number: 1
Setting= 80 Bar -Range=63-125 Bar

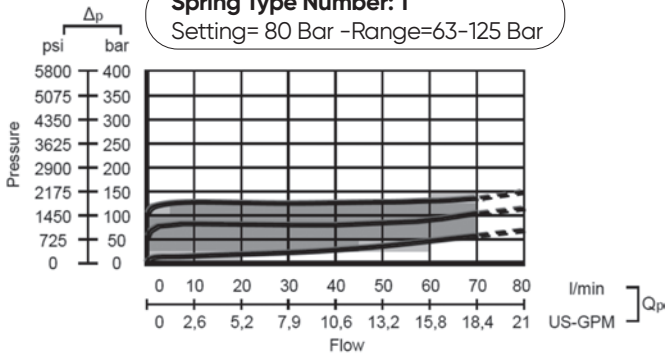

Spring Type Number: 3
Setting= 220 Bar -Range=200-315 Bar

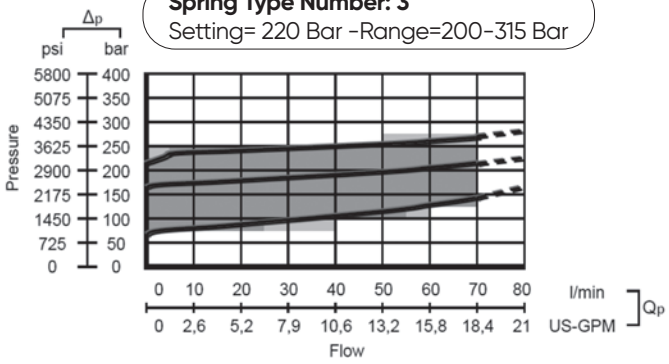

Spring Type Number: 2
Setting= 120 Bar -Range=100-165 Bar

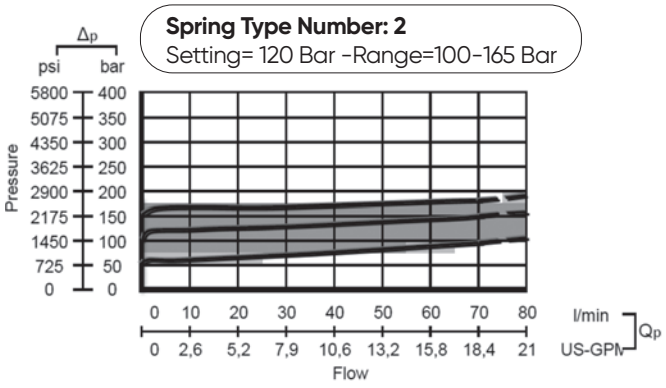

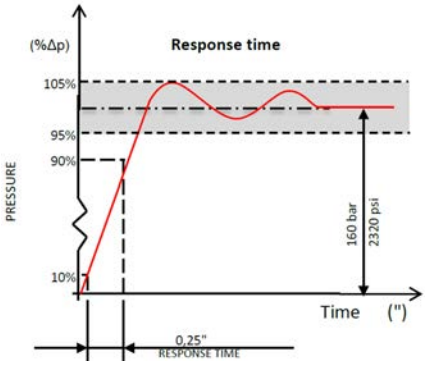

Adjustment Type on Valve

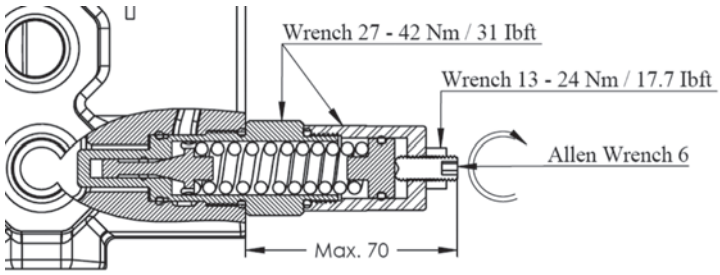

Relief Blanking Plug - WM

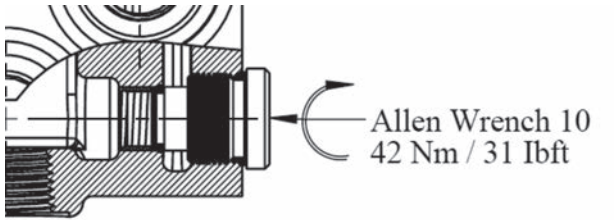

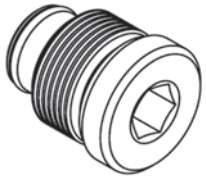



ORDERING CODES

Order Example

ORV TV50-2P / SMR2-120 / 1A-SR-STL / 1A-45P-STL / CO-PL1-P1 / SGT

1	2	3	4	5		6	7	8	9
		1st Section			Following Section	Output Section			

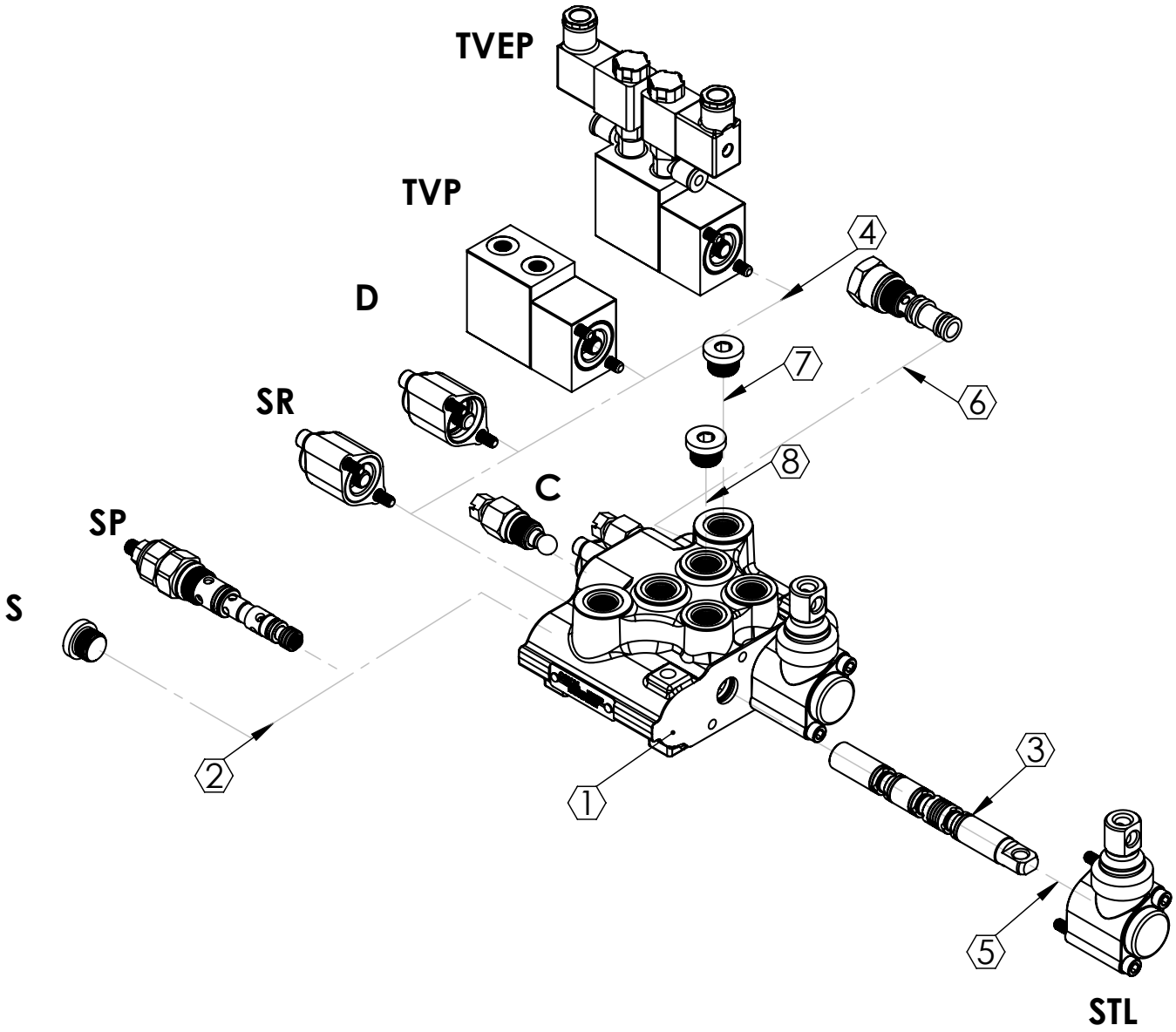

ORDERING CODES

1- Valve Type and Body

TV50 =Valve Type - (TV) - Monoblok
(50) - Max. Flow Rate
1P = Body for 1 Section - (1TV150100)
2P = Body for 2 Sections - (1TV250100)
3P = Body for 3 Sections - (1TV350100)

2- Pressure Relief Options

SMR = Standard direct pressure relief valve
SMR1-080 – (2SMR145080)–Range 0-80 bar
Setting 80 bar
SMR2-120 – (2SMR245120)–Range 60-200 bar
Setting 120 bar
SMR3-220 – (2SMR345220)–Range 160-315 bar
Setting 220 bar
SP = Standard relief plug – (2SP045100)

3- Spool Options

1A -(3STV150110) – 3 Positions ,Double acting
2A -(3STV150120) – 3 Positions ,Double acting
A to tank B Blocked
3A -(3STV150130) – 3 Positions ,Double acting
B to tank A blocked
4A -(3STV150140) – 3 Positions ,Double acting
A and B tank
5A -(3STV150150) – 3 Positions ,Single acting on
A (A to tank)
6A -(3STV150160) – 3 Positions ,Single acting on
B (B to tank)

4- Spool Positioners

SR = Spring Return in neutral position – (4SR045100)
D = Detent in position 1, neutral and 2 - (4D045100)
TVP = ON/OFF Pneumatic – (445P045100)
TVEP = 12 VDC ON/OFF electro-pneumatic –
(4TVEP045112)
24 VDC ON/OFF electro-pneumatic –
(4TVEP045124)

5- Lever Options

STL = Standard Lever –(5STL045100)
JL = Joystick lever for two sections operation
- (5JL 080100)

6- Output Options

CO = G3/8" Carry–Over Connector – (6CO050100)

7- Ports Plug Options "If Required"

PL2(5A) = Plug for single action spool for 5A
G3/8- (7PL2045138)
PL2(6A) = Plug for single action spool for 6A
G3/8- (7PL2045138)
*Page 13 for detail spool options.

8- Ports Input Plug Options

PI2(T) = G3/8 Top input – (7PL2045138)
PI2(S) = G3/8 Side input – (7PL2045138)

9- Ports Thread Options

SGT2 = 3/8" Series Port Options - (9P045138)
UNF = UNF Series Port Options - (9U045138)
M = Metric Series Port Options - (9M045138)
*Page 4 for detail port information.

HandLever

L = Standard HandLever (L=120mmxM10) -
(7L040100)

SPOOL OPTIONS

Spool Type - 1A

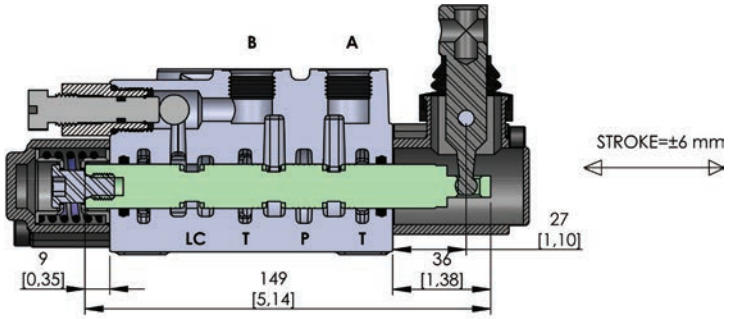

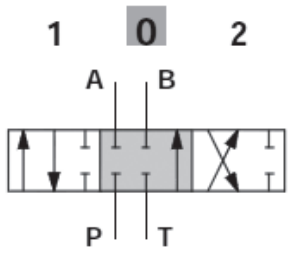

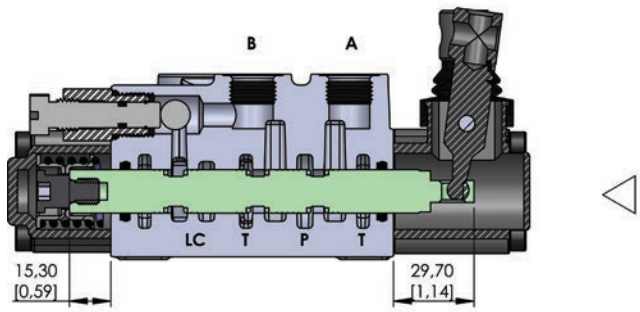

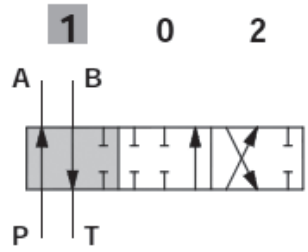

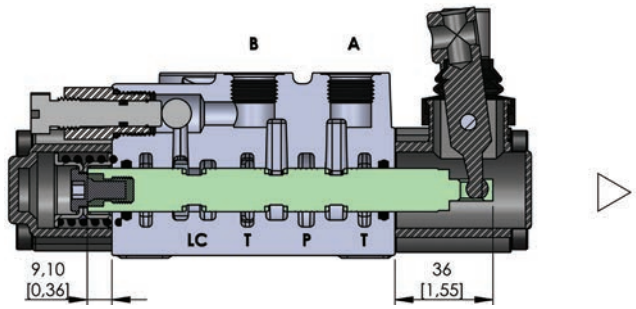

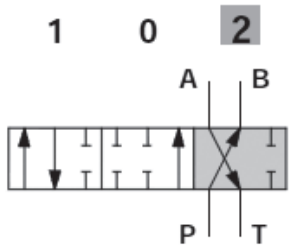

Performance Curve And Data

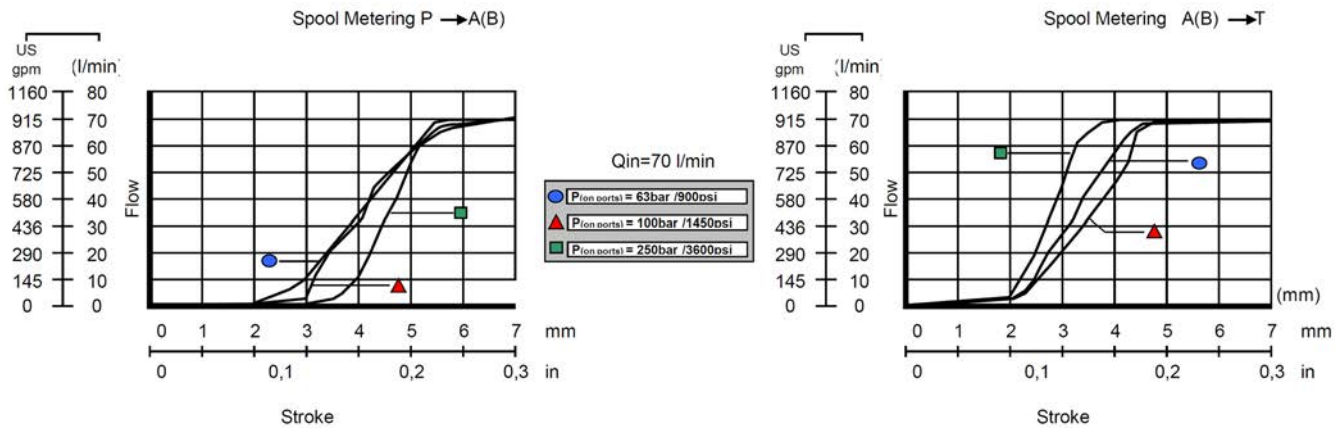

SPOOL OPTIONS

Spool Type - 2A

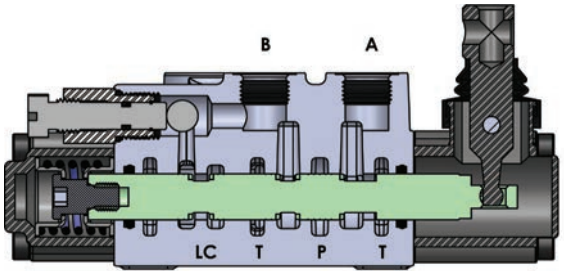

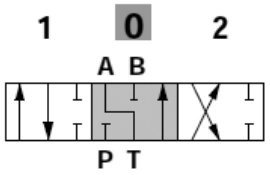

Spool Type - 3A

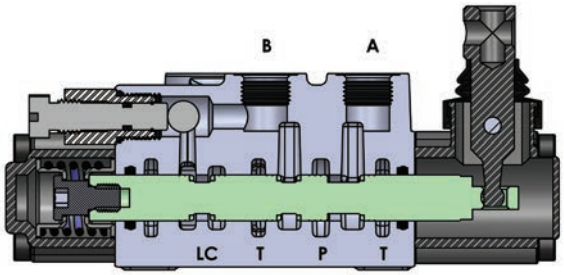

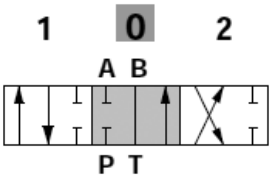

Spool Type - 4A

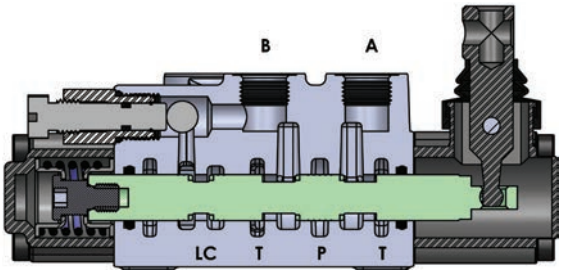

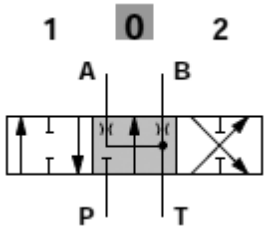

Spool Type - 5A

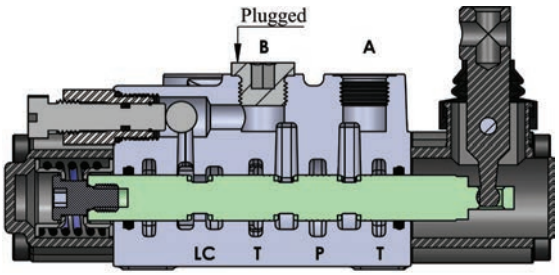

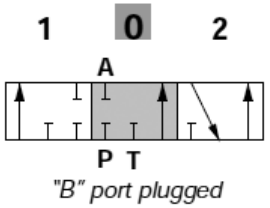

"B" port plugged

Spool Type - 6A

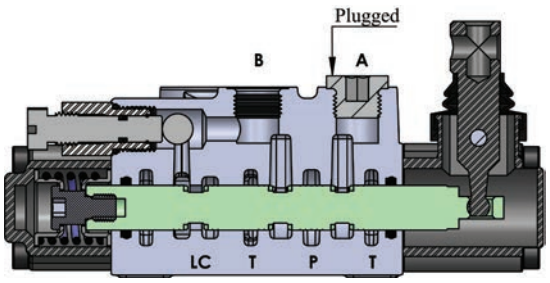

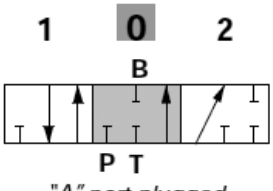

"A" port plugged

SPOOL POSITIONERS – SIDE OF RETURN

With Spring Return in Neutral Position

Kit No: **SR**

Sectional Appearance

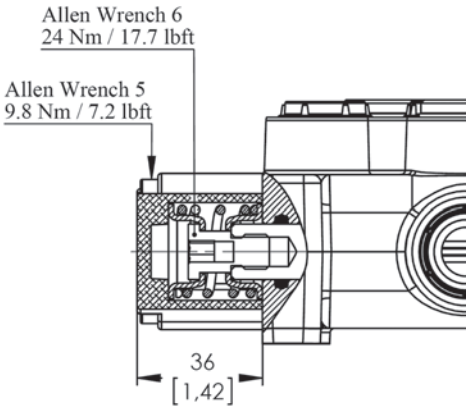

Diagram



With Detent

Kit No: **D**

Sectional Appearance

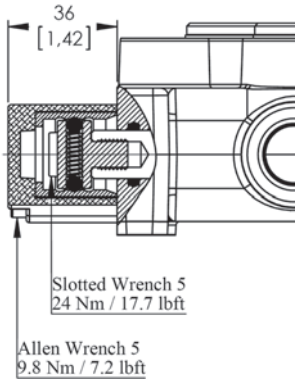

Diagram

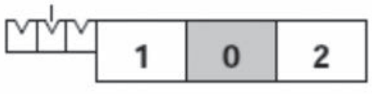

Force - stroke diagram

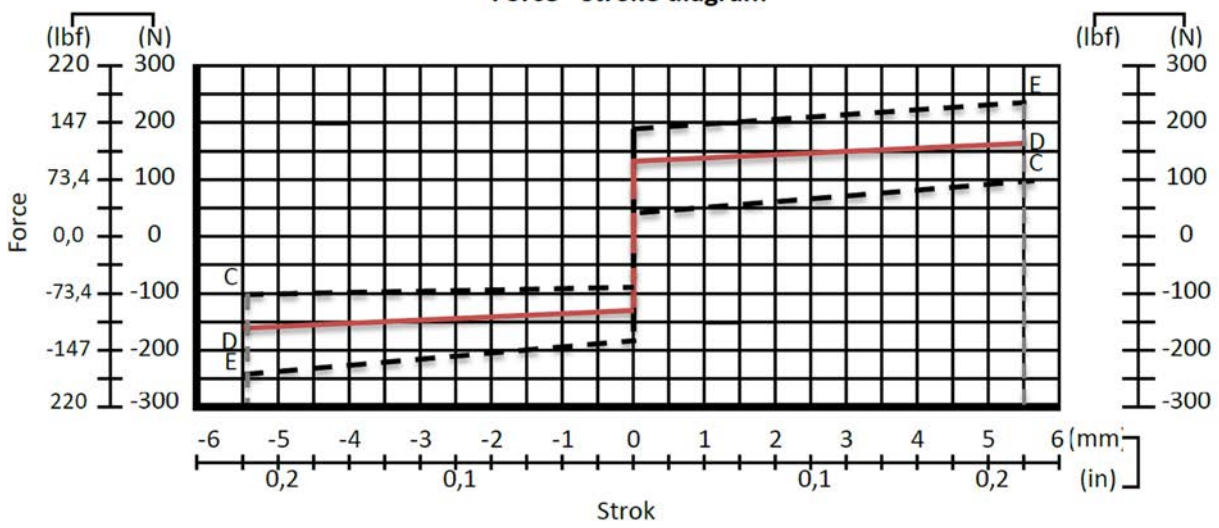

SPOOL POSITIONERS – SIDE OF RETURN

ON/OFF Pneumatic Control

Kit No: **TV80P**

Sectional Appearance

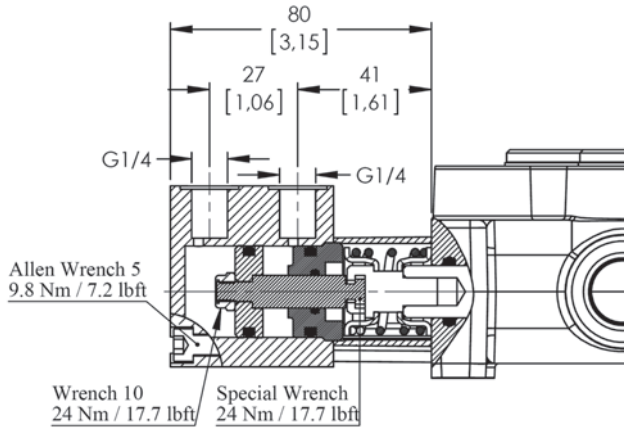

Diagram

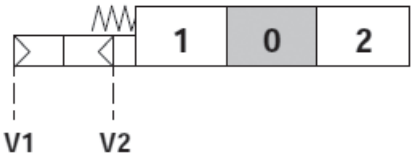

Operating Features
Pilot Pressure .....: 6 Bar (Max. 10) / 87 Psi (Max. 145)

ON/OFF Electro-Pneumatic Control

Kit No: **TV80EP**

Sectional Appearance

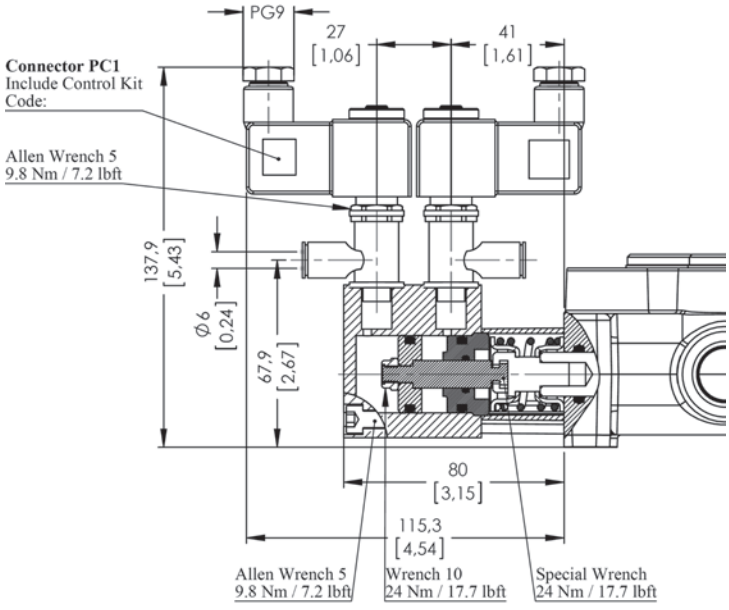

Diagram

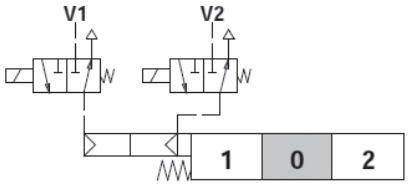

Operating Features
Pilot Pressure .....: 6 Bar (Max. 10) / 87 Psi (Max. 145)
Selenoid Operating Features
Nominal Voltage.....: 12VDC / 24 VDC
Power Rating.....: 6 W

SPOOL POSITIONERS – SIDE OF LEVER CONTROL

Lever Controls

Kit No: **STL - L0**

Sectional Appearance

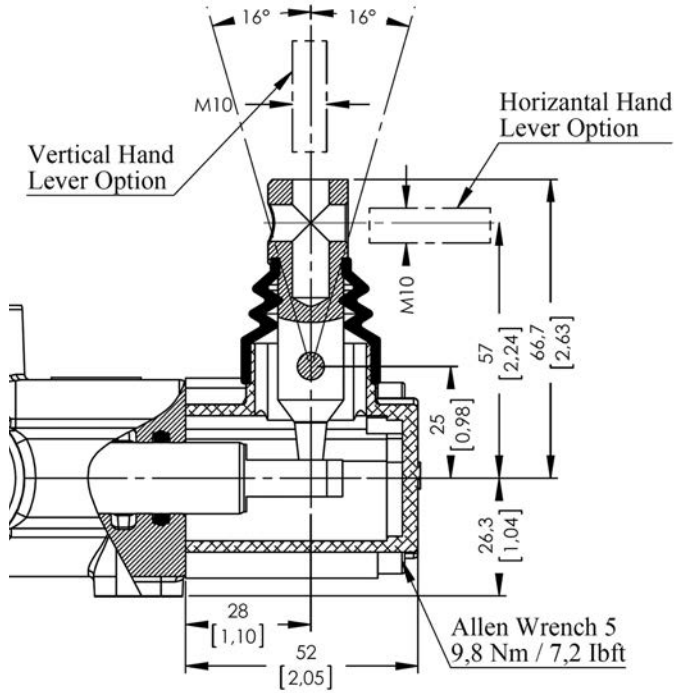

Diagram

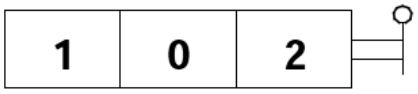

Kit No: **STL - L180**

Sectional Appearance

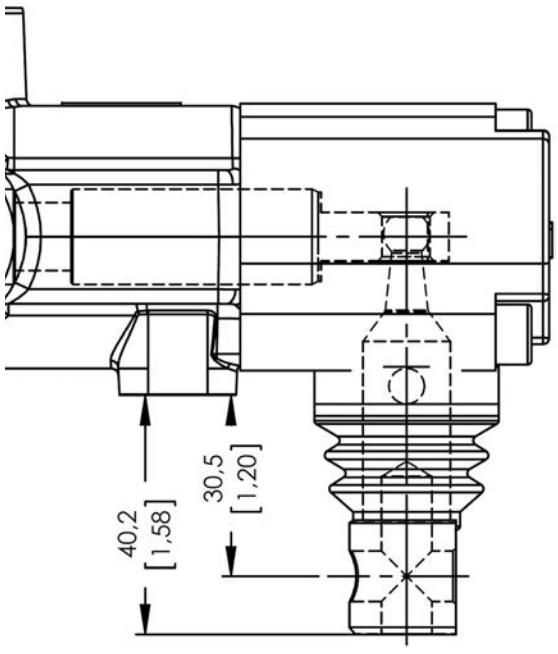

Diagram

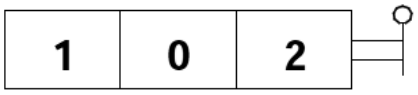

Note: Arm lever pivot box is aluminium cap protected. And it can be rotated 180º.

SPOOL POSITIONERS – SIDE OF LEVER CONTROL

Lever Controls - Joystick

Kit No: **JL**

Exploded View | Diagram

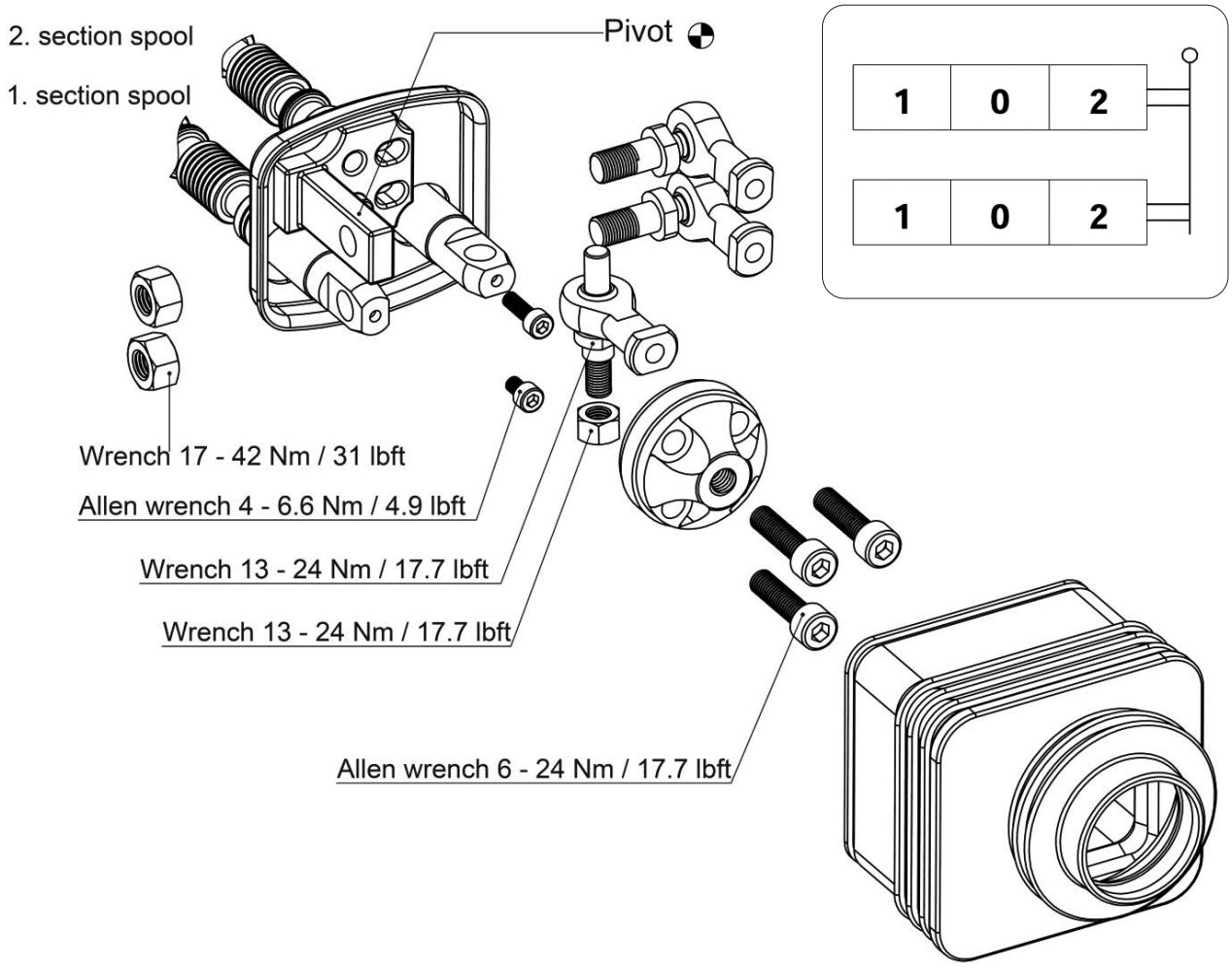

Operation Angle:

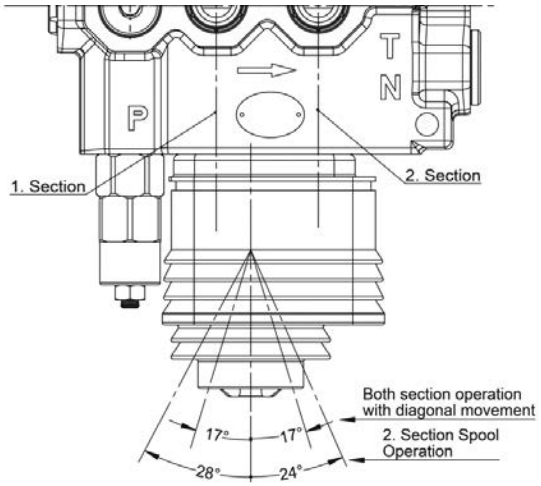

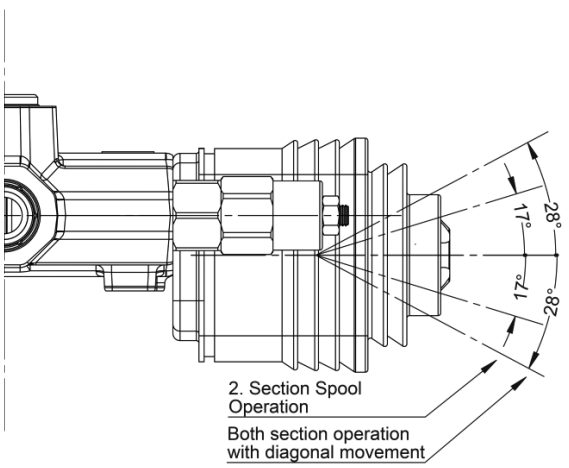

SPOOL POSITIONERS – SIDE OF LEVER CONTROL

Lever Controls - Joystick

Dimensions and movement sceme

Type No: **JL1** — **Application:** Pivot placed down on the Left

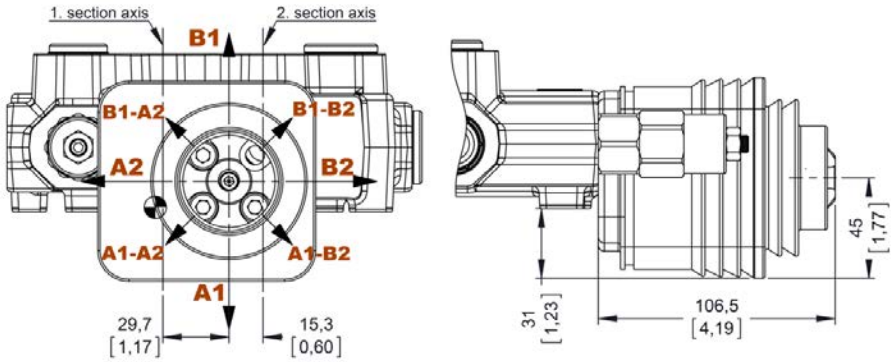

Type No: **JL2** — **Application:** Pivot placed down on the right

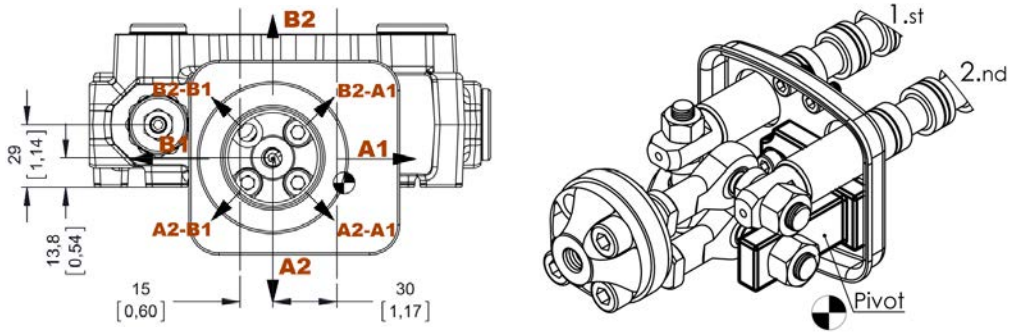

Type No: **JL3** — **Application:** Pivot placed above on the Left

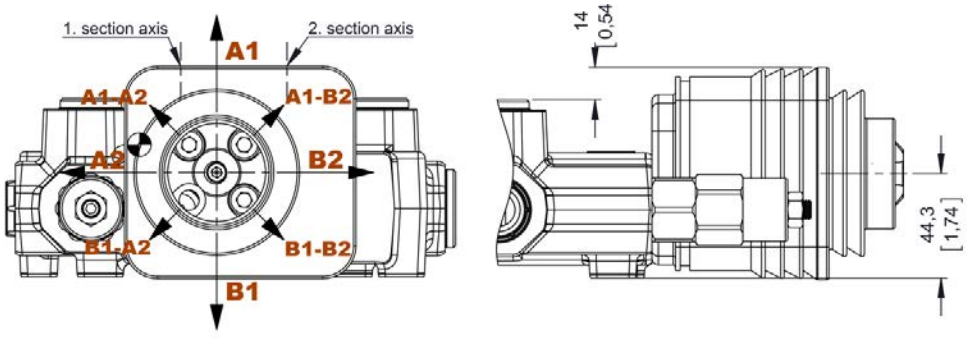

Type No: **JL4** — **Application:** Pivot placed above on the right

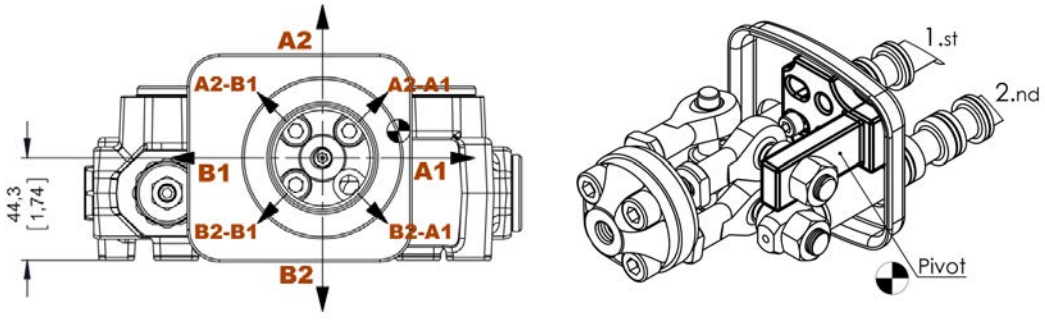

OUTLET PORT OPTIONS

Carry - Over Connection

Kit No: **CO**

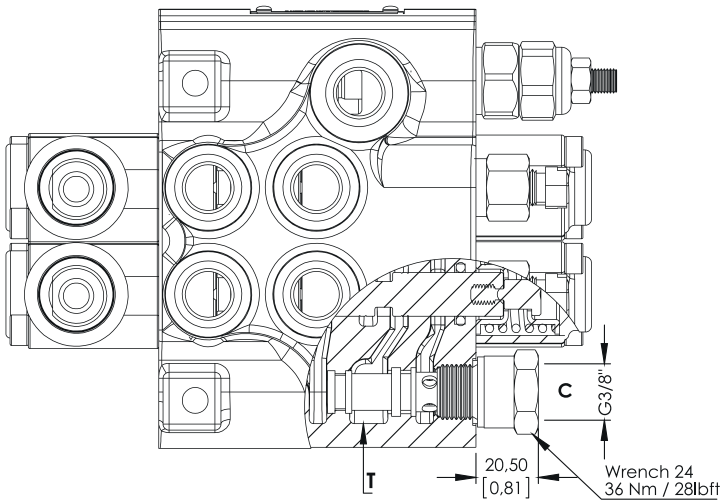

Sectional Appearance

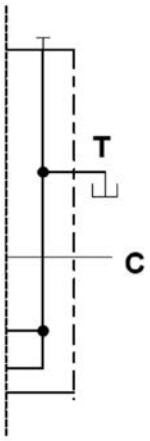

Hydraulic Circuit

Code: ORV TV50-2P / SMR2-120 / 1A-SR-STL/1A-SR-STL/CO-PA1/SGT

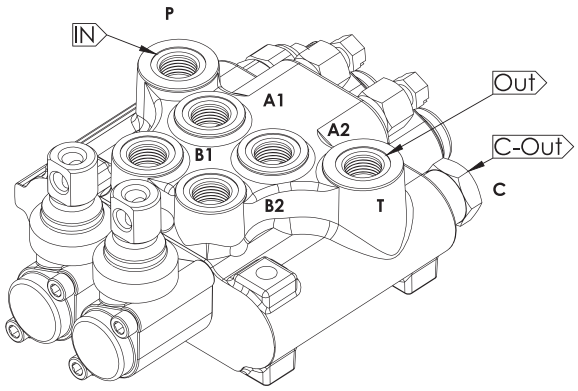

Direction of Port Connectted

SGT : See page 5 for Standard center

INSTALLATION AND MAINTENANCE

The ORV TV50 valve is assembled and tested as per the technical specification of this catalog. Before the final installation on your equipment, follow the below recommendation:

• The valve can be assembled in any position, in order to prevent body deformation and spool sticking mount the product on a flat surface;

• In order to prevent the possibility of water entering the lever box and spool control kit, do not use high pressure wash down directly on the valve;

• Before painting, ensure plastic port plugs are tightly in place.

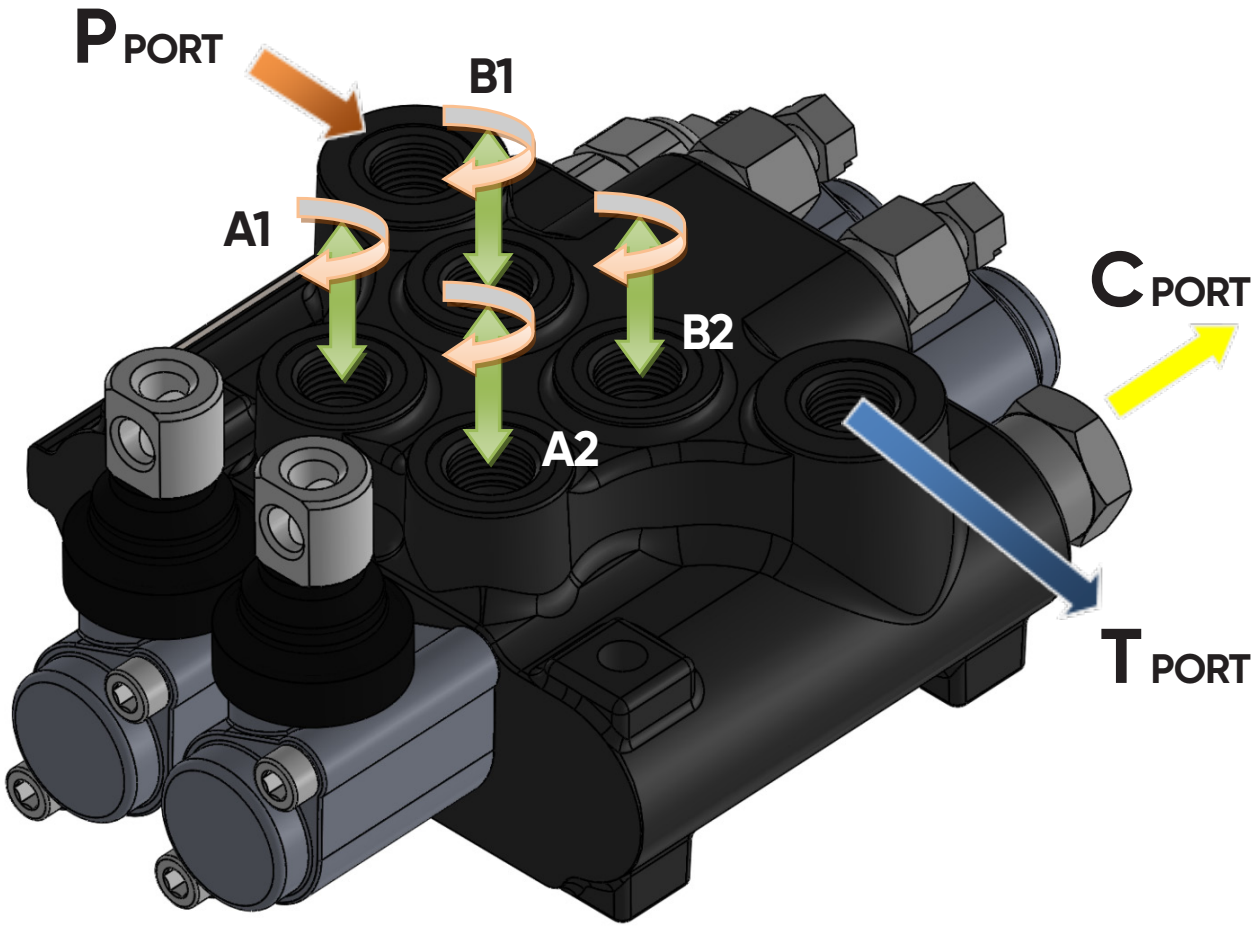

Threads Type (Nm / lbft)	P Port	A and B Port	T and C Port
BSP (ISO 228/1)	G 3/8	G 3/8	G 3/8
With O--Ring seal	35 / 25.8	35 / 25.8	35 / 25.8
With copper washer	40 / 29.5	40 / 29.5	40 / 29.5
With steel and rubber washer	30 / 22.1	30 / 22.1	30 / 22.1
UN--UNF (ISO 11926--1)	3/4--16 UNF--2B	9/16--18 UNF--2B	3/4--16 UNF--2B
With O--Ring seal	50 / 36.9	30 / 22.1	50 / 36.9
METRIC (ISO 262)	M18 x 1.5	M18 x 1.5	M18 x 1.5
With O--Ring seal	35 / 25.8	35 / 25.8	35 / 25.8
With copper washer	40 / 29.5	40 / 29.5	40 / 29.5
With steel and rubber washer	40 / 29.5	40 / 29.5	40 / 29.5

TECHNICAL DATA

Ports Dimensional Data

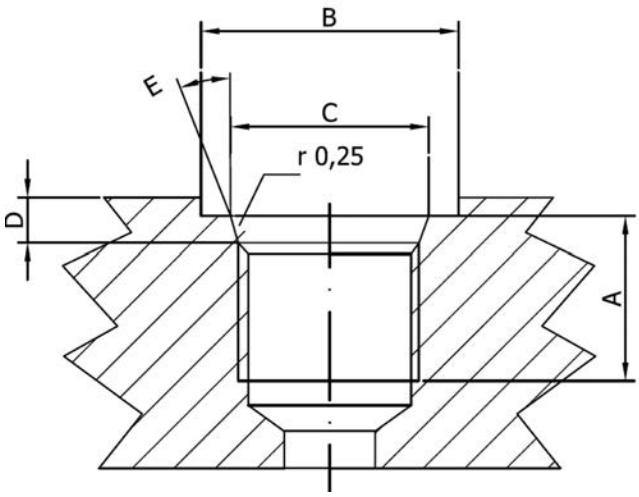

SAE UN-UNF (ISO 725)						
Dimensions		9/16-18 UNF SAE6		3/4-16 UNF SAE8		7/8-14 UNF SAE10
mm	in					
A		13	0,51	15	13	0,51	15
B		25	0,83	30	25	0,83	30
C		13,6	0,61	20,6	13,6	0,61	20,6
D		2,5	0,10	2,5	2,5	0,10	2,5
E		15°		15°		15°	

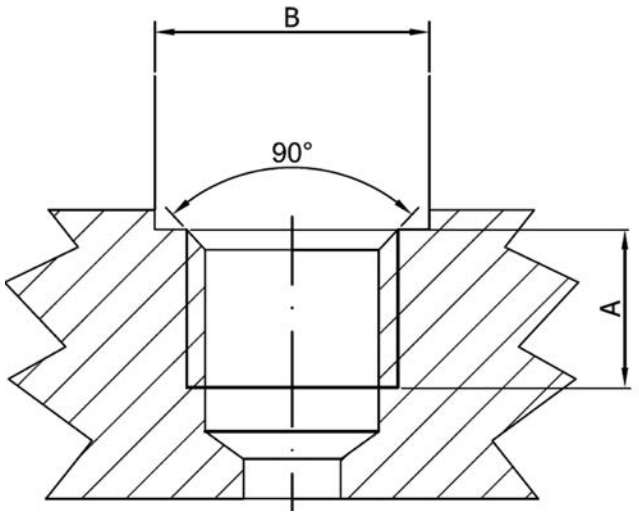

BSP (ISO 228)						
Dimensions		G 1/4		G 3/8		G1/2
mm	in					
A		14	0,55	14	14	0,55	14
B		19	0,75	23	19	0,75	23

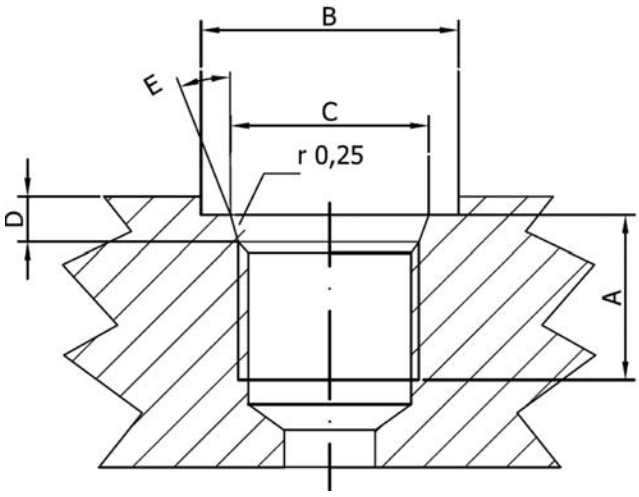

METRIC (ISO 262)					
Dimensions		M18x1,5 ISO 262		M22x1,5 ISO 262	
mm	in				
A		14	0,55	14	0,55
B		27,5	1,08	27,5	1,08

ORVAL HYDRAULIC

ORV TV50



ORVAL HYDRAULIC

SPECIAL TRACTOR VALVES
ORV-DMF

CE

TÜV International Certification
TÜV THÜRINGEN
CERT
AZAV
15 190 17185
TIC



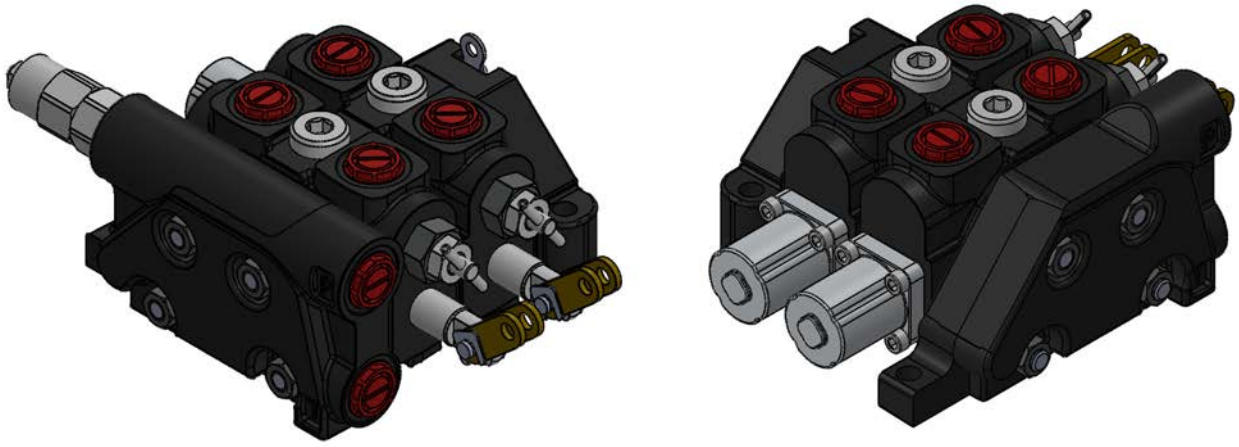

CONTENTS

Working Conditions	3
Dimensional Data	3
Hydraulic Circuit	3
Performance Data And Curve	3
Inlet Relief Options	3
Ordering Codes	3
Spool Options	3
Spool Positioners – Side of Return	3
Installation and Maintenance	3
Technical Data	3

Additional Informations

Note: This catalog shows the product in the most standard configurations. For Other Configurations, more detailed information or special request, Please contact Customer Service Dept.

Warning!: All specifications of this catalog refer to the standard product at this date (09/2018). ORVAL, oriented to a continuous improvement, reserves the right to discontinue, modify or revise the specifications, without notice.

ORVAL IS NOT RESPONSIBLE FOR ANY DAMAGE CAUSED BY
AN INCORRECT USE OF THE PRODUCT.

WORKING CONDITIONS

Nominal Flow Rating / Displacement	80 l/min	21 U.S.G.P.M
Maximum Working Pressure (Series Circuit)	210 Bar	3050 PSI
Maximum Working Pressure (Parallel Circuit)	315 Bar	4600 PSI
Max. Back Pressure	25 Bar	360 PSI
Oil Temperature with NBR Seals	-20 to 80 C°	-4 to 176 F °
with FPM (Viton) Seals	-20 to 100 C°	-4 to 212 F °
Oil Viscosity – Operating Range	From 10 to 75 mm2/s	From 10 to 75 cSt
Minumum / Maximum	10 / 400 mm2/s	10 / 400 cSt
Oil Filtration	≤30 µ	
Ambiant Temperature Range	-35 to 60 C°	-31 to 140 F °
Number Of Spools	1 to 12	
Internal Leakage (at 100 bar (1450 PSI), 40C° (110 F°), 46 cSt – A(B)–T)	3 cm3/min	0,18 in3/min
Max. Level Of Contamination	19/16 - ISO 4406	
Tie rod tightening torque	30 Nm	22 lbft

Not: This catalogue shows technical specifications measured with mineral oil of 46 mm2/s-46 cSt viscosity at 40 C° temparture.

Features

• Simple, compact and heavy duty designed sectional valves from 1 to 4 sections for open and closed center hydraulic systems.
• Fitted with a main pressure relief valve.
• Interchangeable spool diametre is 18 mm – 0,71 in.
• Available manual, pneumatic, hydraulic and electro-pneumatic spool control kits.

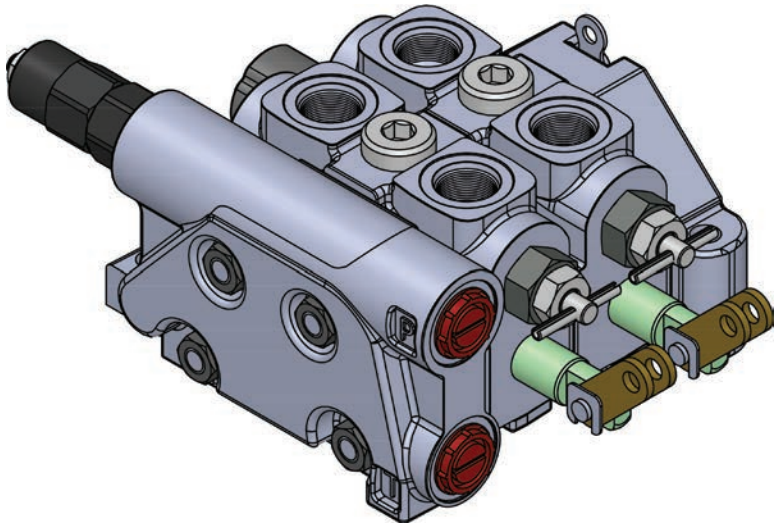

DIMENSIONAL DATA

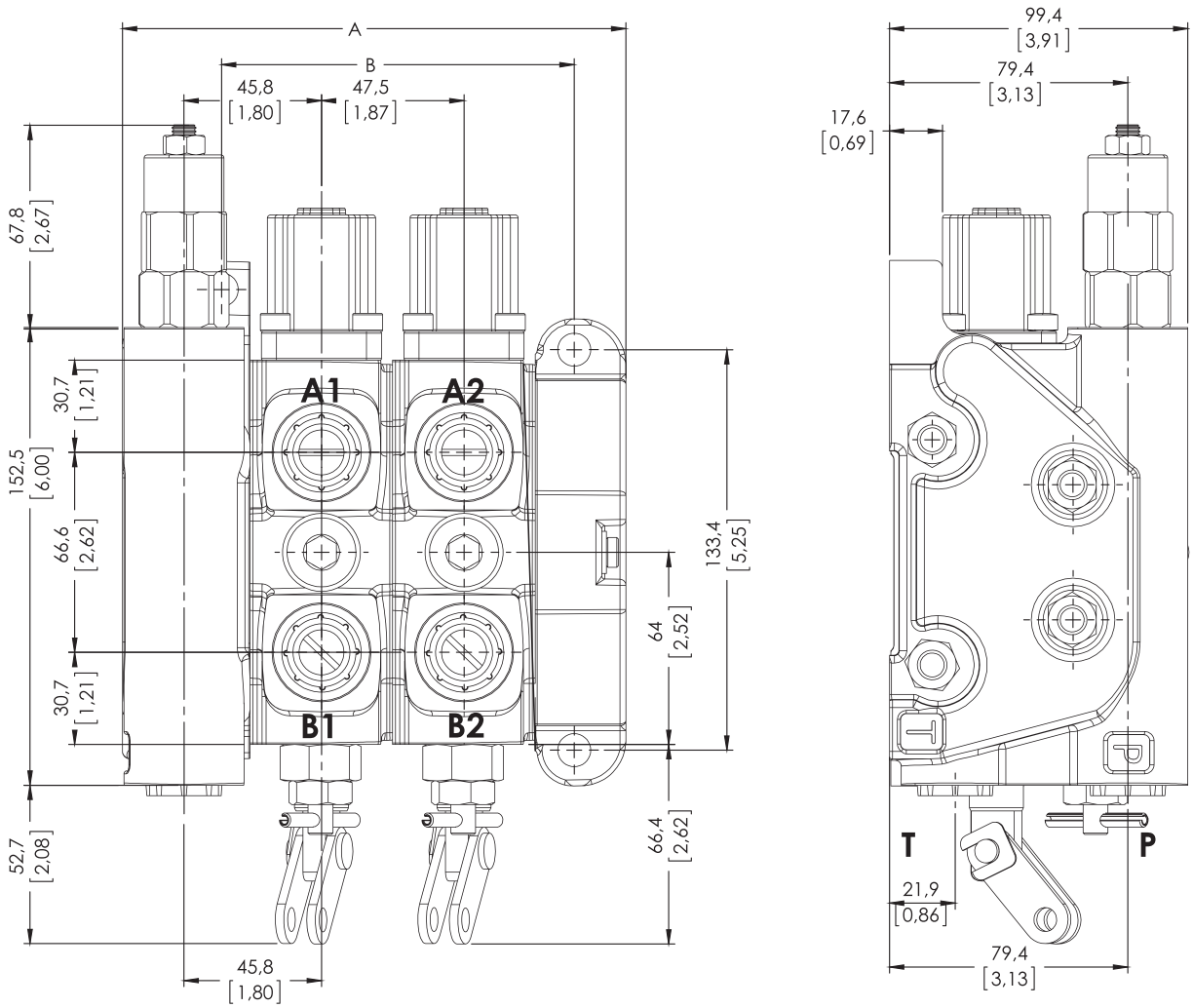

TYPE	A		B		Weight	
	mm	in	mm	in	Kg	lb
ORV- DMF-1P	119,2	4,69	69	2,71	7.58	16.71
ORV- DMF-2P	166,7	6,56	116,5	4,58	10.96	24.16
ORV- DMF-3P	214,2	8,43	164	6,45	14.34	31.61
ORV- DMF-4P	261,7	10,30	211,5	8,32	17.37	39.06

STANDARD THREADS

PORT	BSP (Iso 228) 1/2" Series	UN-UNF (Iso 11926-1)	Metric (Iso 262)
P Inlet	G 1/2	3/4 - 16 UNF	M22x1.5
A-B Ports	G 1/2	3/4 - 16 UNF	M22x1.5
T Outlet	G 1/2	3/4 - 16 UNF	M22x1.5

HYDRAULIC CIRCUIT

Parallel

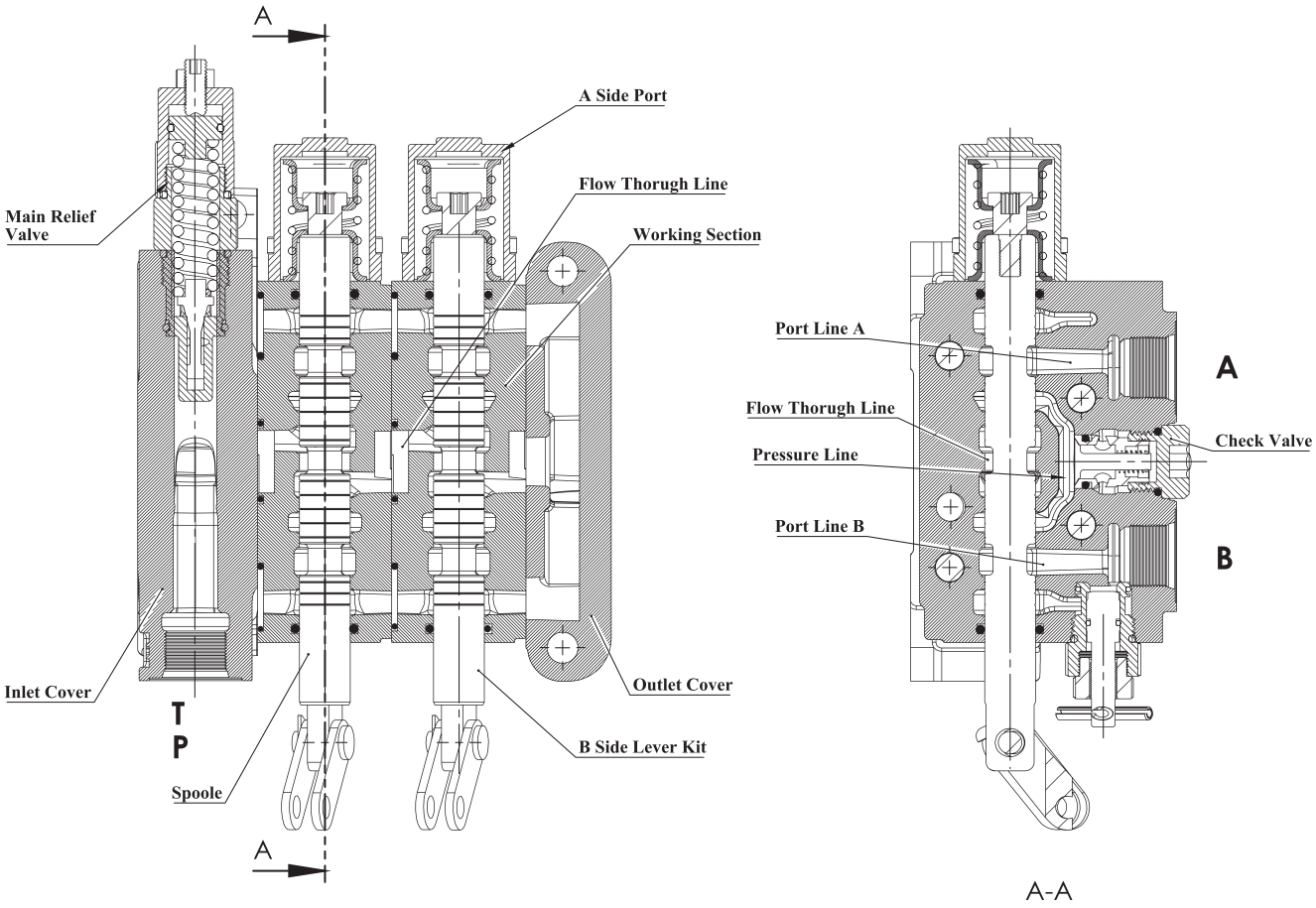

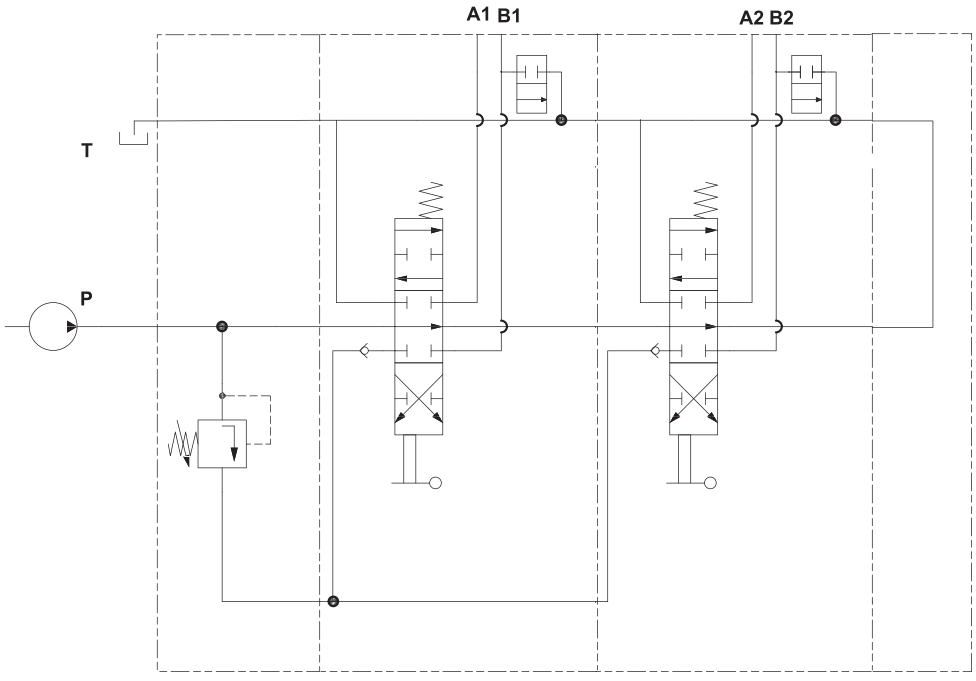

Code: ORV DMF-2P (SD(-SMR2-125)/P-1A -SR/ P-1A -SR

HYDRAULIC CIRCUIT

Inlet Cover – Pump Side

SD - Side inlet with direct pressure relief valve
SP - Side inlet with Non - relief valve

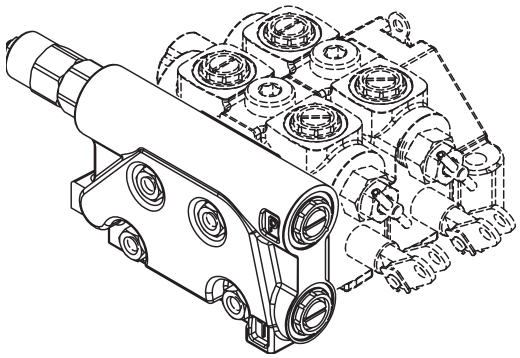

Type = SD

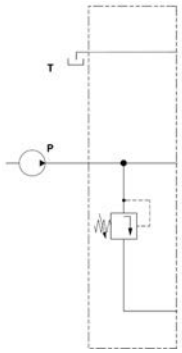

Type = SP

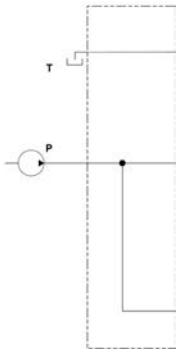

Working Sections

P – Parallel

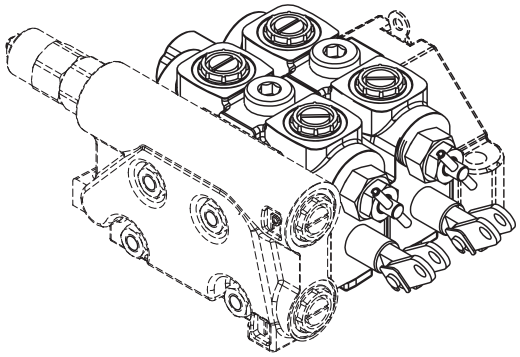

Type=P

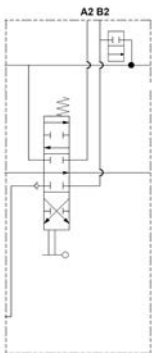

PERFORMANCE DATA AND CURVE

Open Center - Pressure Drop (P-T)

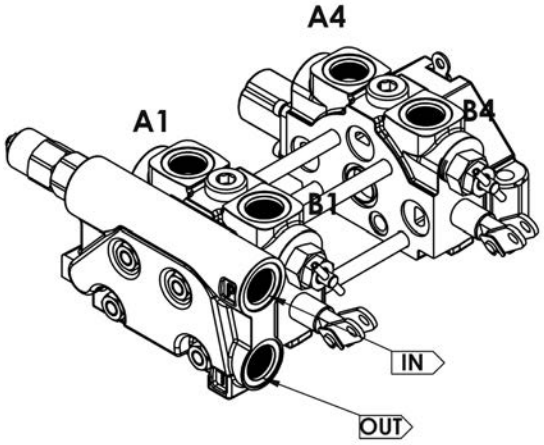

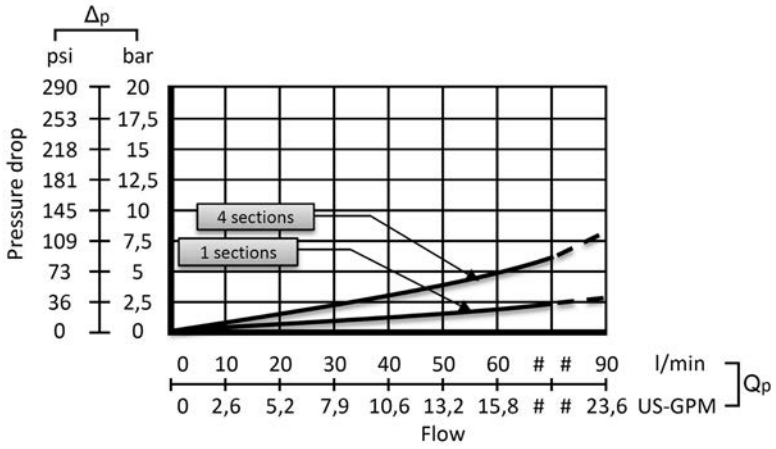

Inlet to Work Port - Pressure Drop (P-A/B)

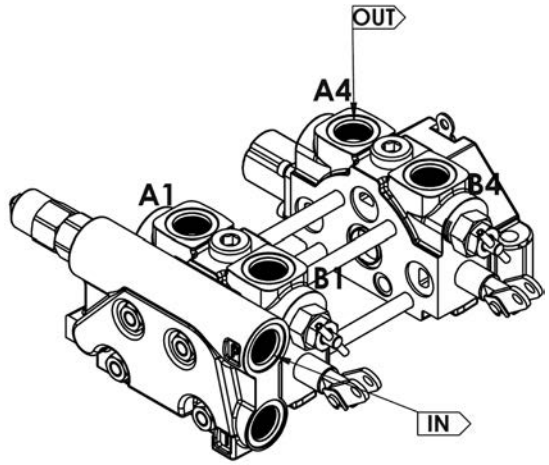

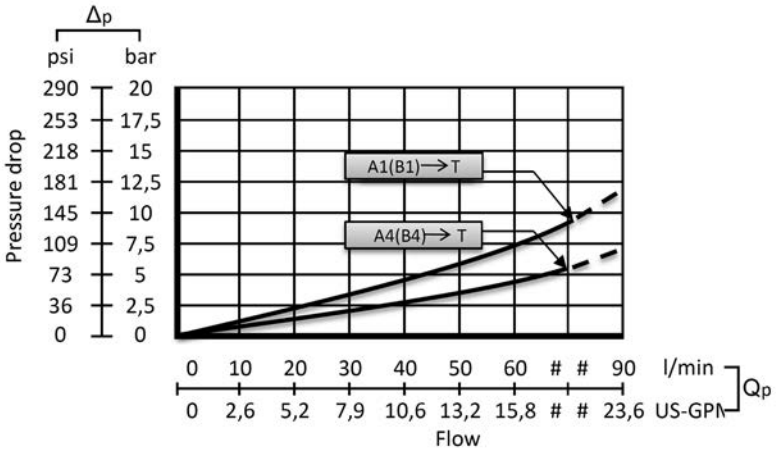

Work Port to Outlet - Pressure Drop (A/B-T)

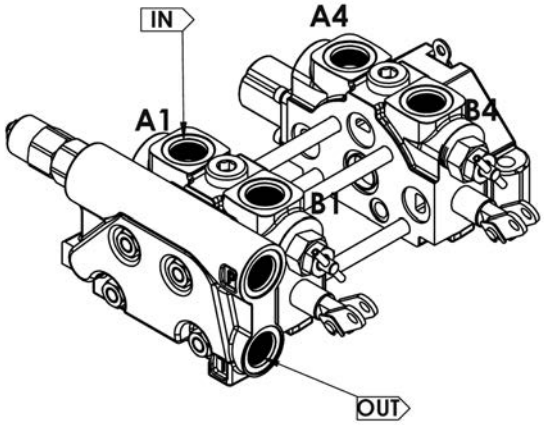

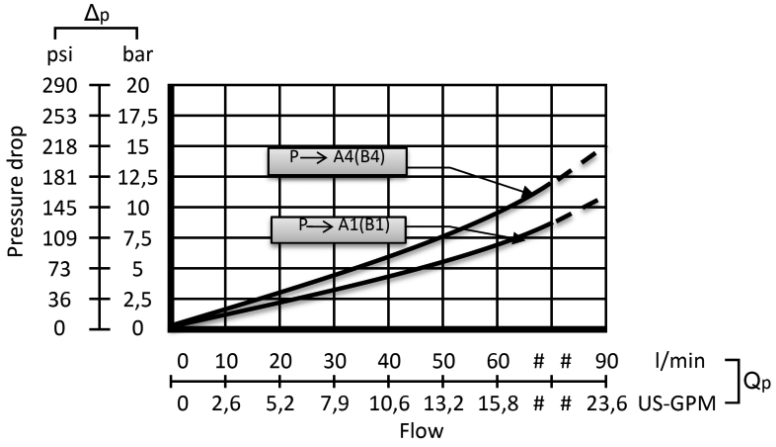

INLET RELIEF OPTIONS

Direct Pressure Relief Valve

Code:

SMR2 – 125

- **Pressure Setting Bar in (Standard 125 bar)**
- **Standard Main Relief Spring Type -2**

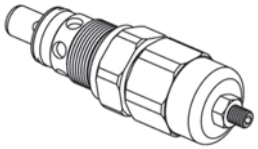

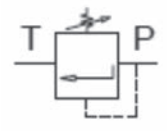

Performance Data

Spring Type Number: 1
Setting= 80 Bar -Range=63-125 Bar

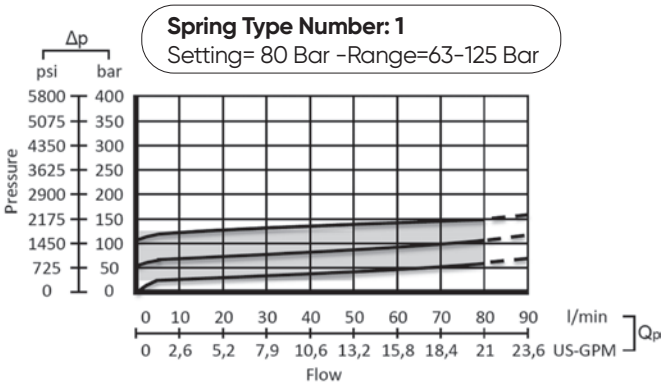

Spring Type Number: 2
Setting= 125 Bar -Range=100-165 Bar

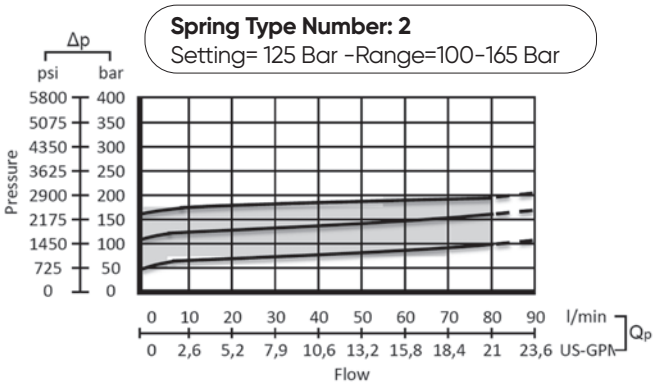

Spring Type Number: 3
Setting= 175 Bar -Range=125-250 Bar

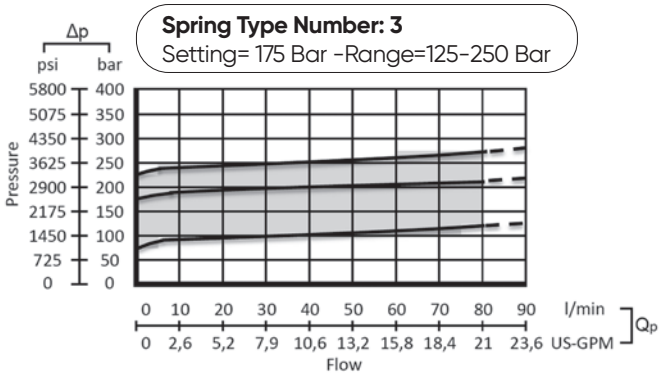

Spring Type Number: 4
Setting= 220 Bar -Range=200-315 Bar

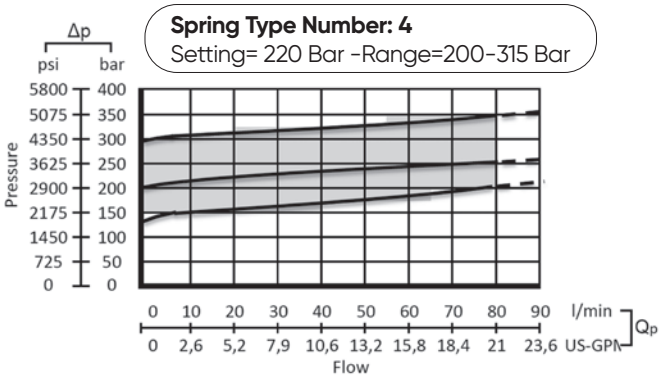

Adjustment Type on Valve

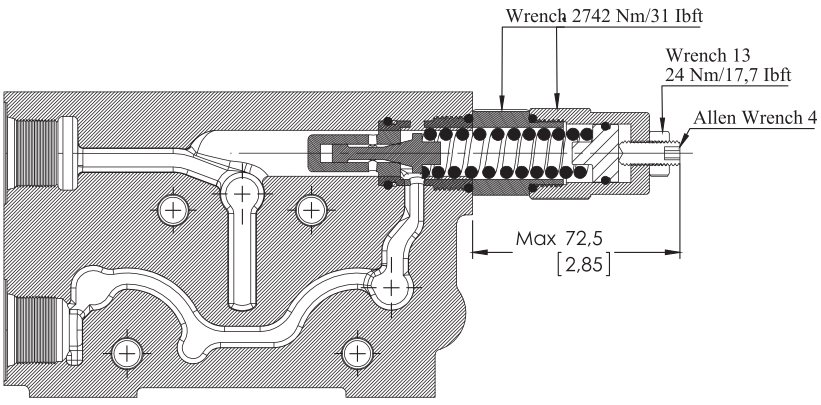

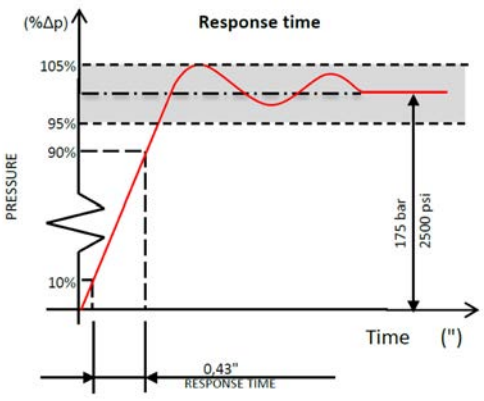

INLET RELIEF OPTIONS

Non Relief Blanking - SP

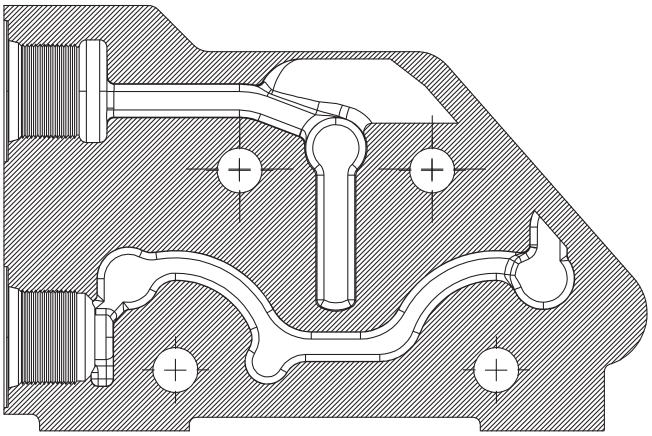

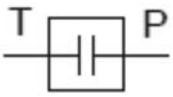

ORDERING CODES

Order Example

ORV DMF - 2P (SD - SMR2 - 125) / P - 1A - SR / P - 1A - 80P

Base Code "0"

1 1.2 2.1 2.2 2.3

1 st Section

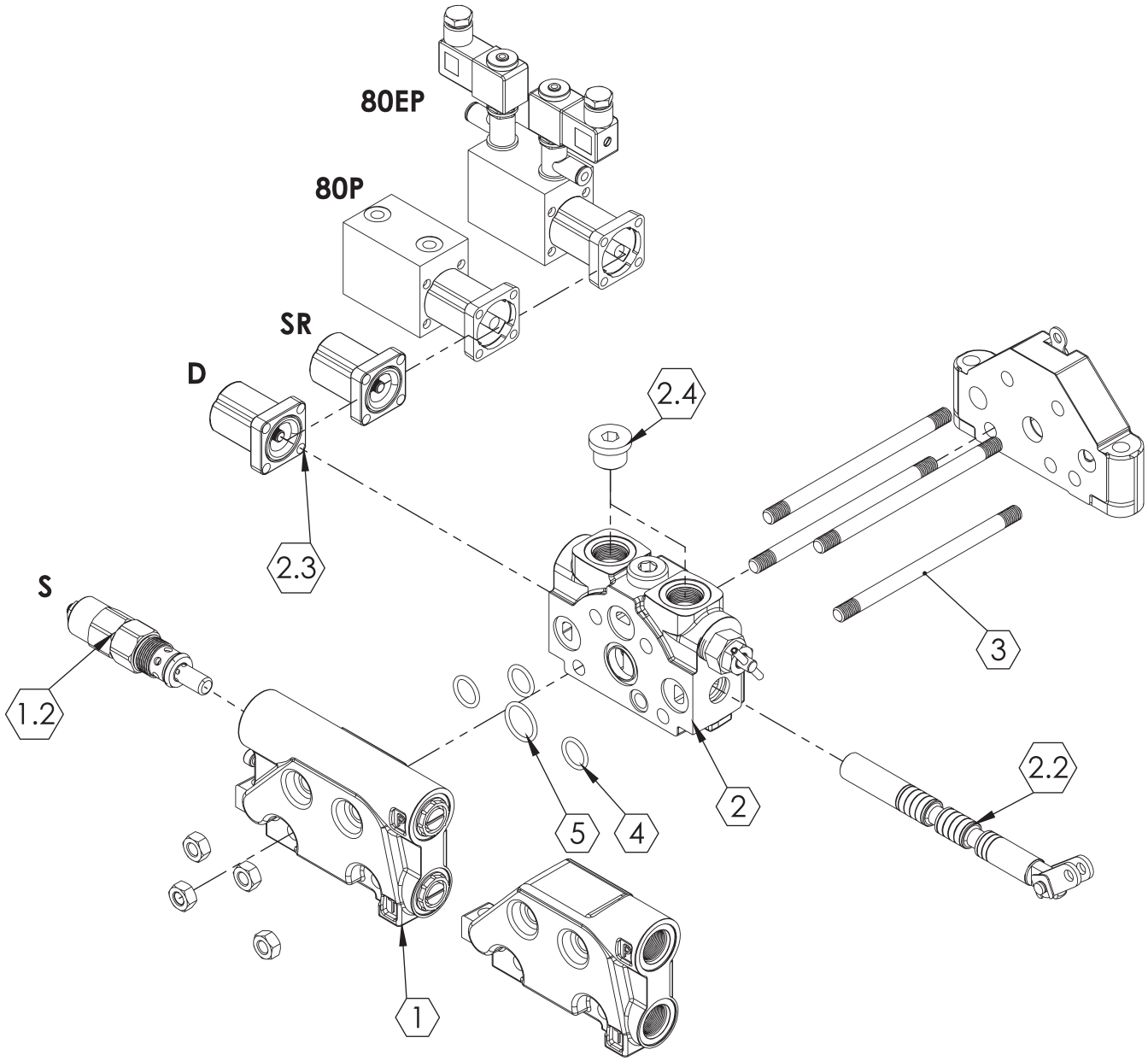

ORDERING CODES

1- Inlet Section

ORV DMF-2P DMF = Valve Type-(DMF)- Sectional
(80) - Max. Flow Rate
2P = Sections Quantity
SD = Side inlet with direct pressure relief valve (1DD80100)
SP = Non relief valve (1DP80100)

2- Working Section

P = Parallel (2D80100)

3- Assembling Kit

Tie rod kit for 1 section valve - (4TRK180100)
Tie rod kit for 2 section valve - (4TRK280100)
Tie rod kit for 3 section valve - (4TRK380100)
Tie rod kit for 4 section valve - (4TRK480100)

4-5-O_Ring Kit

5. -17.00x2.65 NBR 70 SH O-Ring seal (3 Qty.) (5MK80100)
6. -22.40x2.65 NBR 70 SH O-Ring seal (1 Qty.) (6MK80100)

1.*-Inlet Options

1.1 Inlet Cover
Body = Standard (11DP80100)
Non Relief Valve (11DS80100)
1.2 Inlet Relief
SMR1-080 – (12SMR180080)–Range 63-125 bar
Setting 80 bar
SMR2-125 – (12SMR280125)– Range 100-160 bar
Setting 125 bar
SMR3-175 – (12SMR380175)– Range 125-250 bar
Setting 175 bar
SMR4-220 – (12SMR480220)–Range 200-315 bar
Setting 220 bar

2.*- Working Options

2.1 Working Section
PA= Without ports valve prearrangement, with parallel circuit - Body (21DSPA80100)
2.2 Spool Options
1A -(22DS80110) – 3 Positions, Double acting
2A -(22DS80120) – 3 Positions, Double acting
A to tank B Blocked
3A -(22DS80130) – 3 Positions, Double acting
B to tank A blocked
4A -(22DS80140) – 3 Positions, Double acting
A and B tank
5A -(22DS80150) – 3 Positions, Single acting on
A (A to tank)
6A -(22DS80160) – 3 Positions, Single acting on
B (B to tank)
2.3 Spool Positioners
SR = Spring Return in neutral position – (26SR80100)
D = Detent in position 1, neutral and 2 -(26D80100)
80P = ON/OFF Pneumatic – (2645P150100)
80EP = 12 VDC ON/OFF electro-pneumatic (2680EP150112)
24 VDC ON/OFF electro-pneumatic – (2680EP150124)

SPOOL OPTIONS

Spool Type - 1A

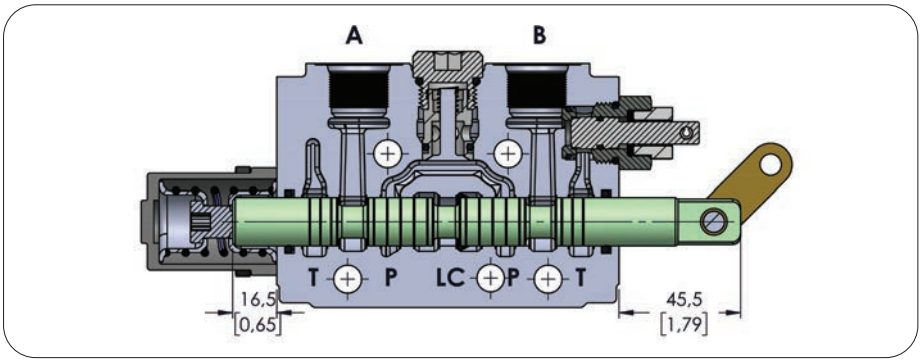

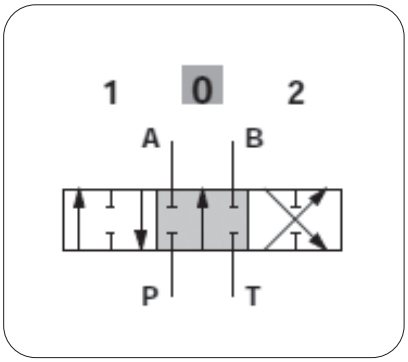

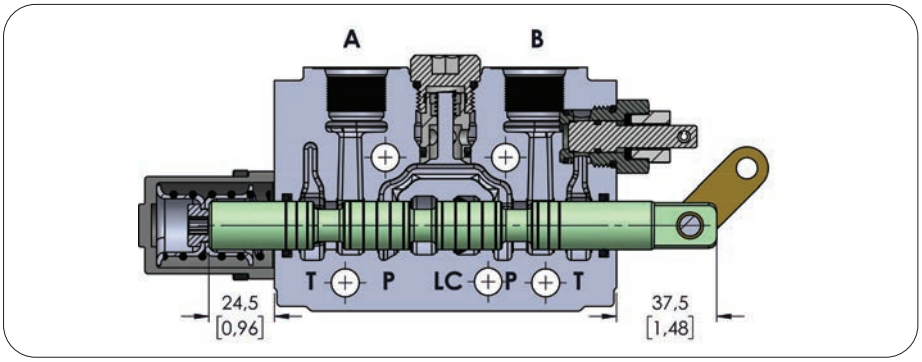

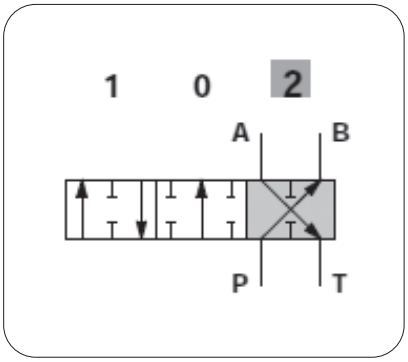

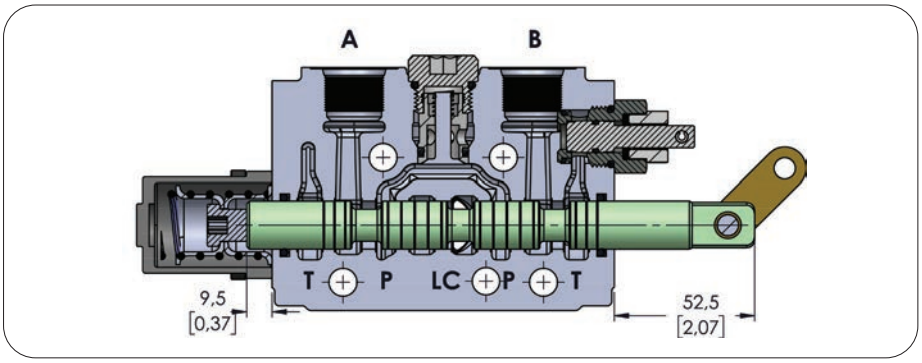

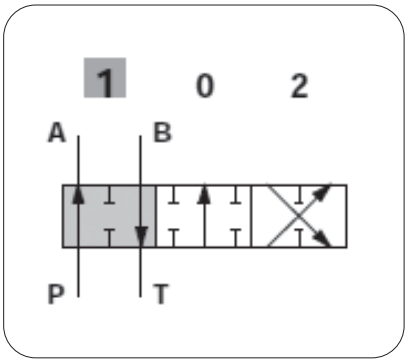

Performance Curve And Data

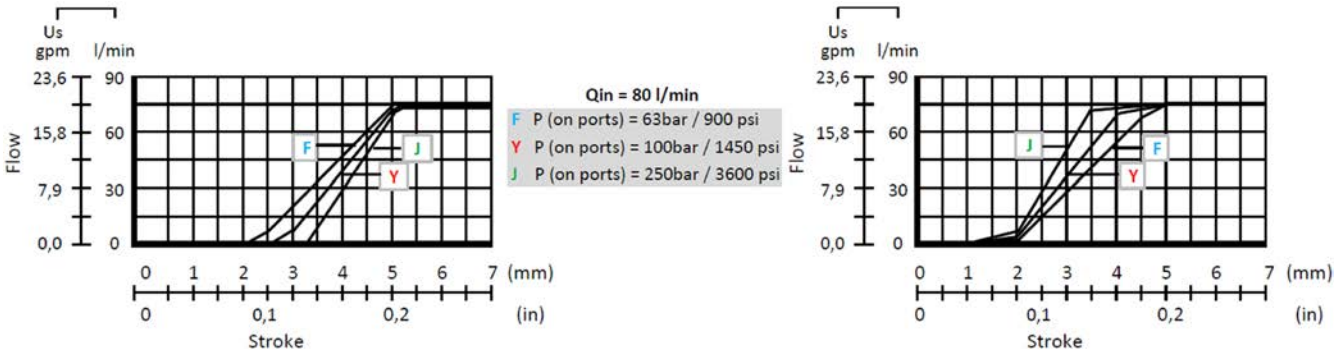

SPOOL OPTIONS

Spool Type - 2A

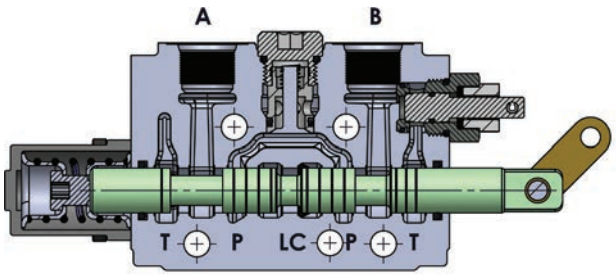

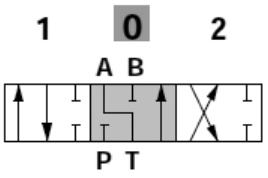

Spool Type - 3A

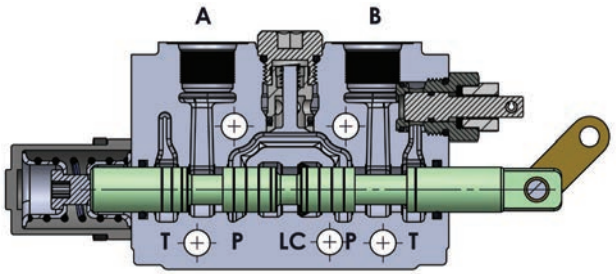

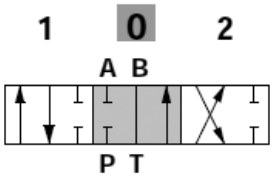

Spool Type - 4A

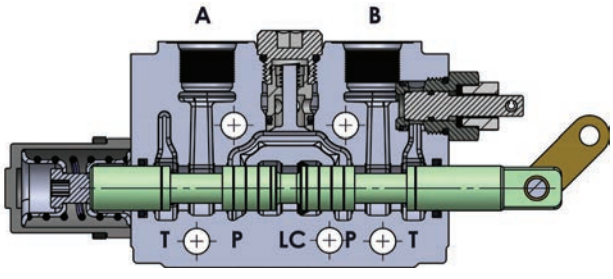

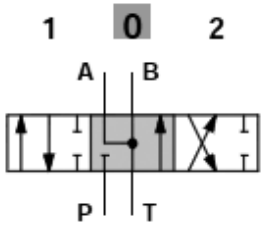

Spool Type - 5A

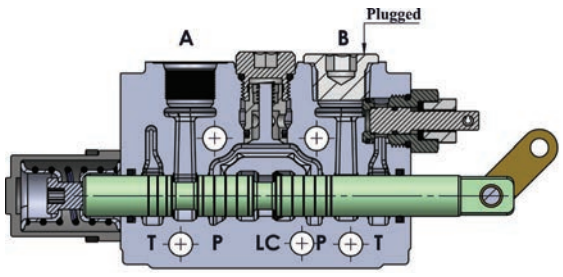

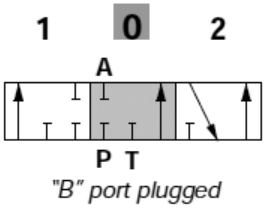

"B" port plugged

Spool Type - 6A

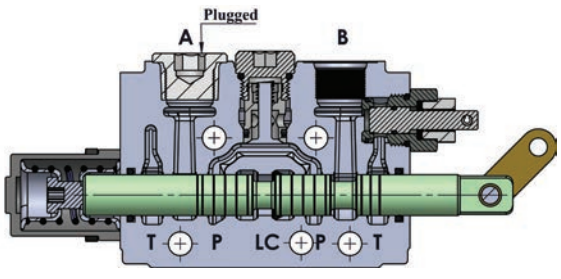

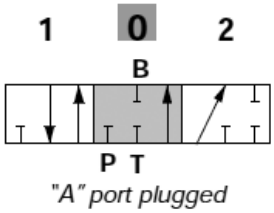

"A" port plugged

SPOOL POSITIONERS – SIDE OF RETURN

With Spring Return in Neutral Position

Kit No: **SR**

Sectional Appearance

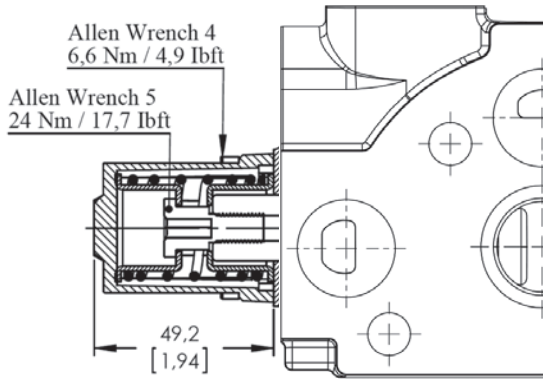

Diagram



With Detent

Kit No: **D**

Sectional Appearance

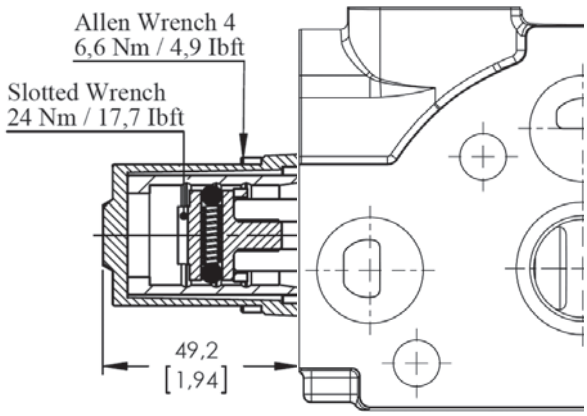

Diagram

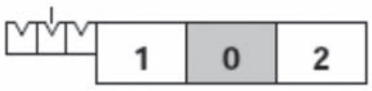

Force - stroke diagram

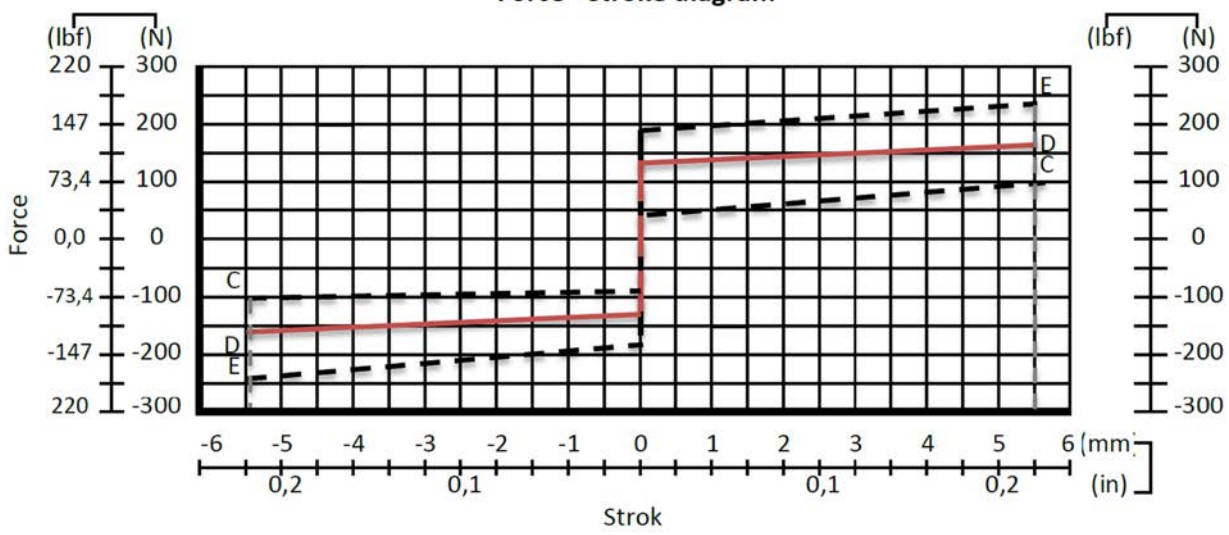

SPOOL POSITIONERS – SIDE OF RETURN

ON/OFF Pneumatic Control

Kit No: **80P**

Sectional Appearance

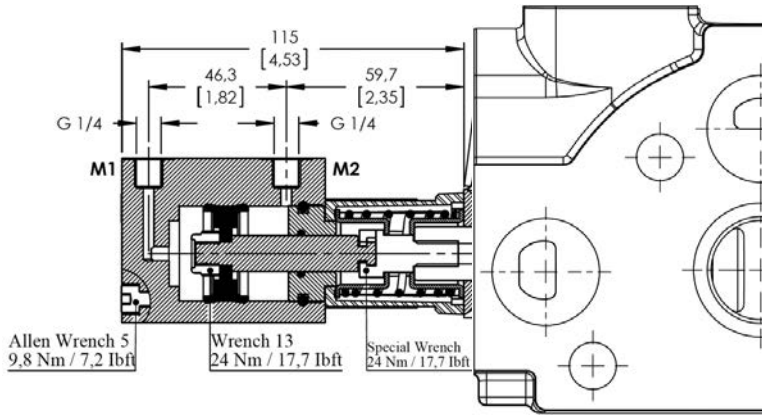

Diagram

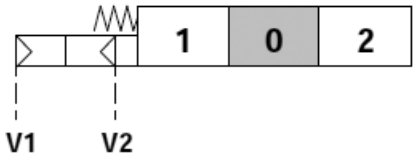

Operating Features
Pilot Pressure .....: 6 Bar (Max. 10) / 87 Psi (Max. 145)

ON/OFF Electro-Pneumatic Control

Kit No: **80EP**

Sectional Appearance

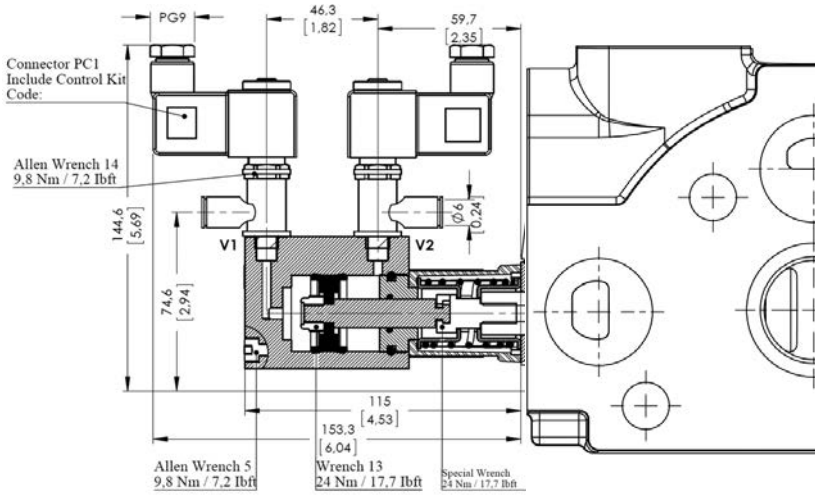

Diagram

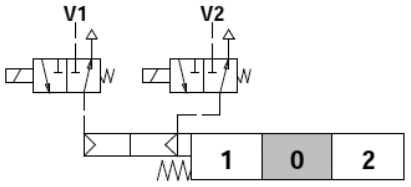

Operating Features
Pilot Pressure .....: 6 Bar (Max. 10) / 87 Psi (Max. 145)
Selenoid Operating Features
Nominal Voltage.....: 12VDC / 24 VDC
Power Rating.....: 6 W

INSTALLATION AND MAINTENANCE

The ORV-DMF valve is assembled and tested as per the technical specification of this catalog. Before the final installation on your equipment, follow the below recommendation:

• The valve can be assembled in any position, in order to prevent body deformation and spool sticking mount the product on a flat surface;

• In order to prevent the possibility of water entering the lever box and spool control kit, do not use high pressure wash down directly on the valve;

• Before painting, ensure plastic port plugs are tightly in place.

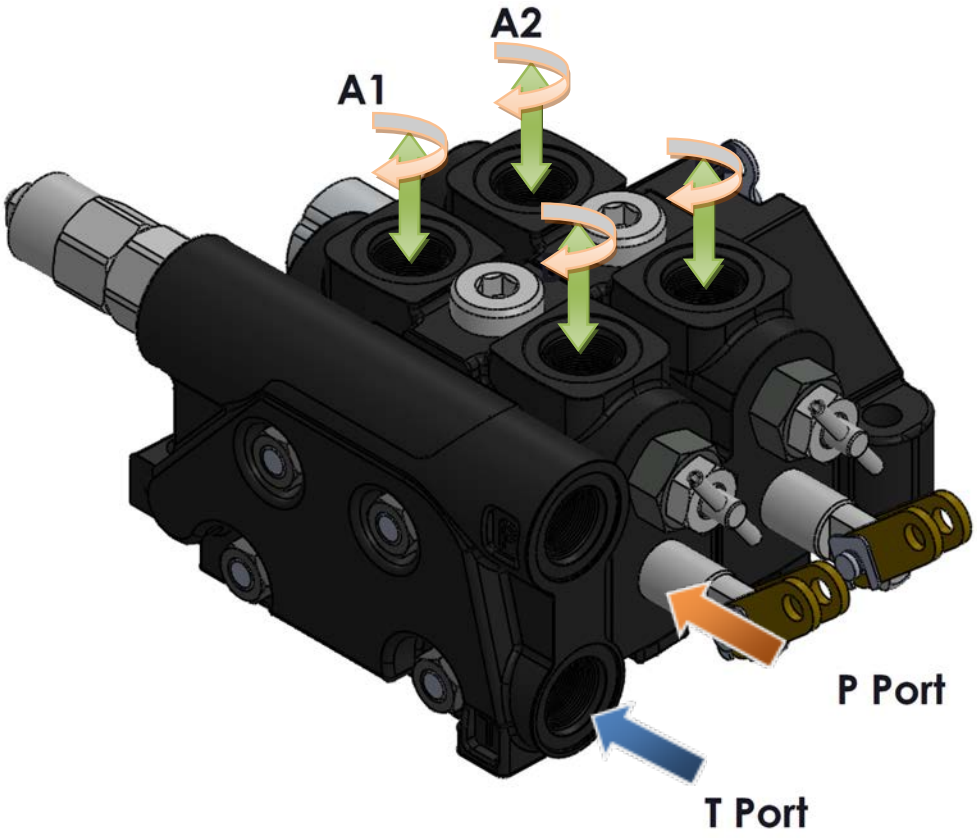

Threads Type (Nm / lbft)	P Port	A and B Port	T Port
BSP (ISO 228/1)	G 1/2	G 1/2	G 1/2
With O--Ring seal	50 / 36.9	50 / 36.9	50 / 36.9
With copper washer	60 / 44.3	60 / 44.3	60 / 44.3
With steel and rubber washer	60 / 44.3	60 / 44.3	60 / 44.3
BSP (ISO 228/1)	G 3/4	G 3/4	G 3/4
With O--Ring seal	70 / 51.6	70 / 51.6	70 / 51.6
With copper washer	70 / 51.6	70 / 51.6	70 / 51.6
With steel and rubber washer	70 / 51.6	70 / 51.6	70 / 51.6
UN--UNF (ISO 11926--1)	9/16--18 UNF--2B	9/16--18 UNF--2B	9/16--18 UNF--2B
With O--Ring seal	30 / 22.1	30 / 22.1	30 / 22.1
METRIC (ISO 262)	M22 x 1.5	M22 x 1.5	M22 x 1.5
With O--Ring seal	50 / 36.9	50 / 36.9	50 / 36.9
With copper washer	60 / 44.3	60 / 44.3	60 / 44.3
With steel and rubber washer	60 / 44.3	60 / 44.3	60 / 44.3

TECHNICAL DATA

Ports Dimensional Data

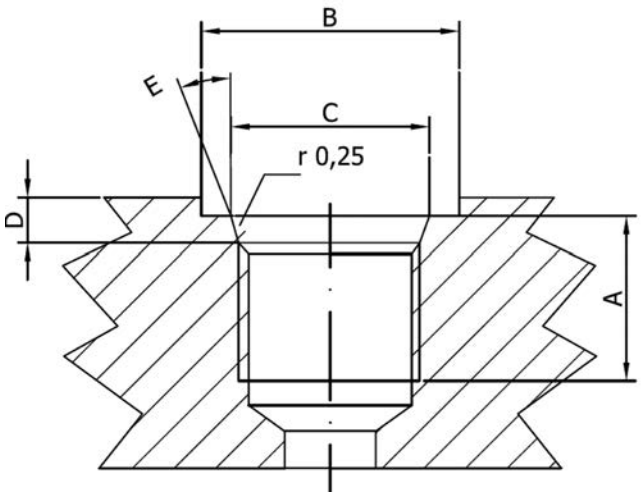

SAE UN-UNF (ISO 725)						
Dimensions		7/8-14 UNF SAE10		1"1/16-12 UN SAE12		1"5/16-12 UN SAE16	
mm	in						
A		17	0,67	20	0,79	20	0,79
B		34	1,34	41	1,61	49	1,92
C		23,9	0,94	29,2	1,15	35,5	1,40
D		2,5	0,10	3,3	0,13	3,3	0,13
E		15°		15°		15°	

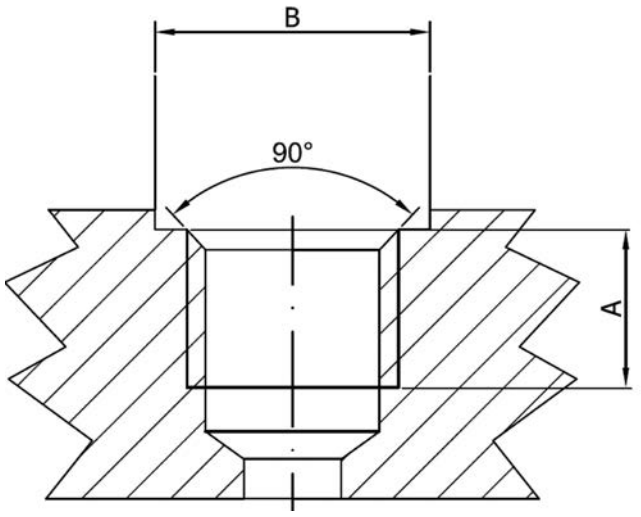

BSP (ISO 228)						
Dimensions		G 1/2"		G 3/4		G 1	
mm	in						
A		16	0,63	18	0,71	20	0,79
B		27	1,06	33	1,30	40	1,57

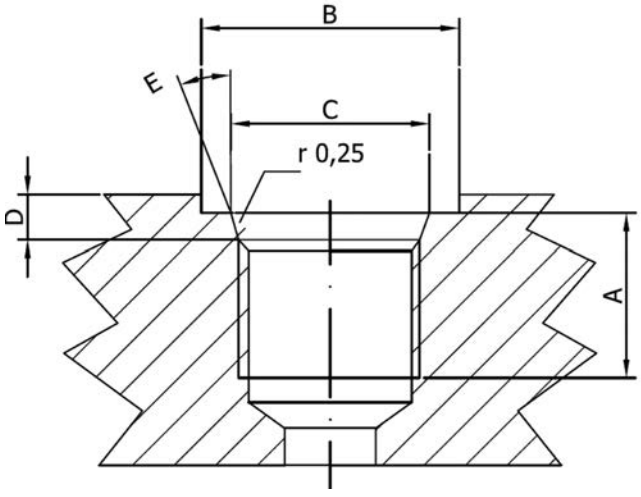

METRIC (ISO 262)					
Dimensions		M22x1,5 ISO 262		M27x2 ISO 262	
mm	in				
A		16	0,63	18	0,71
B		31,5	1,24	37,7	1,48

ORVAL HYDRAULIC

ORV DMF



ORVAL HYDRAULIC

SPECIAL TRACTOR VALVES

ORV-MF

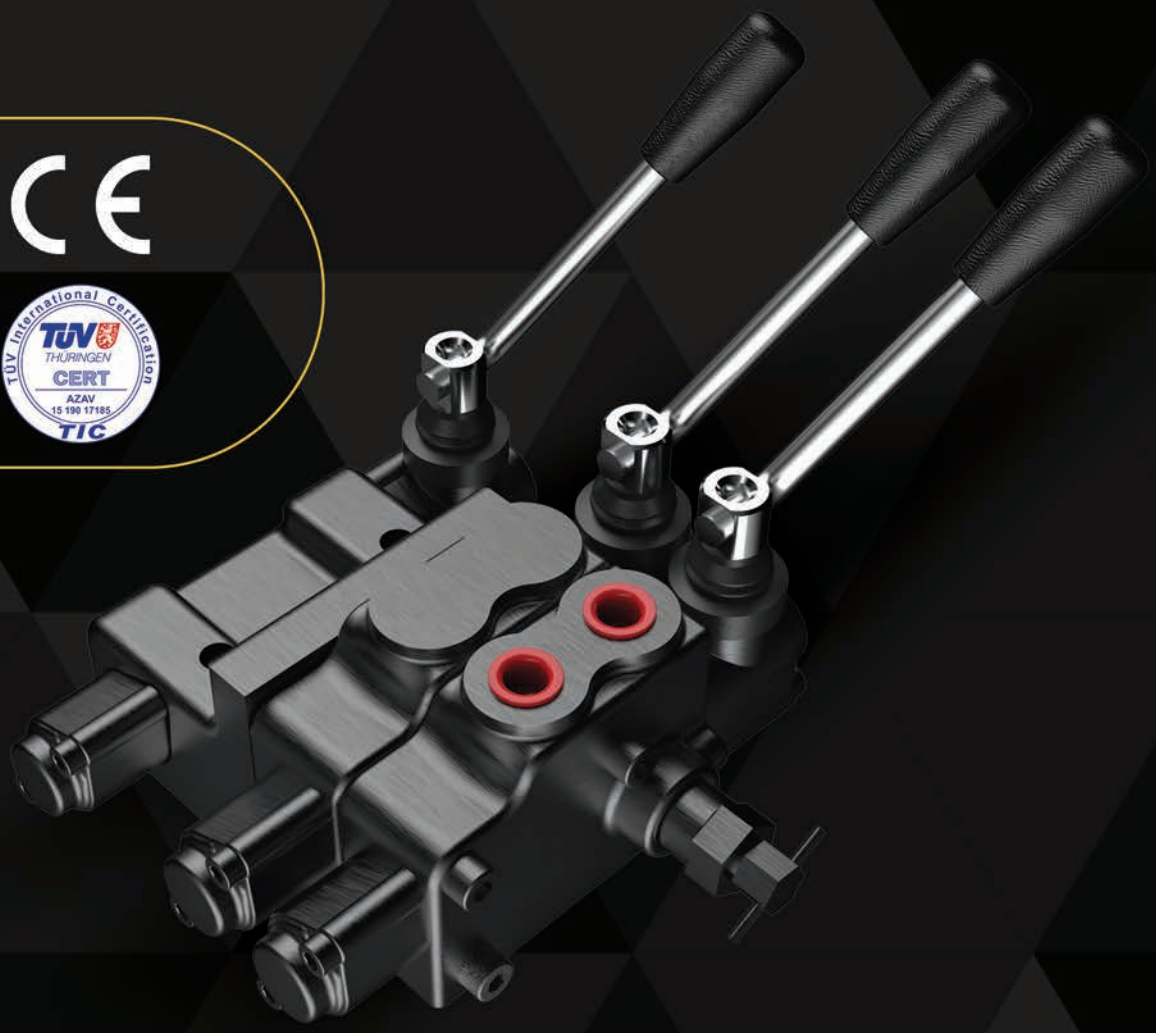

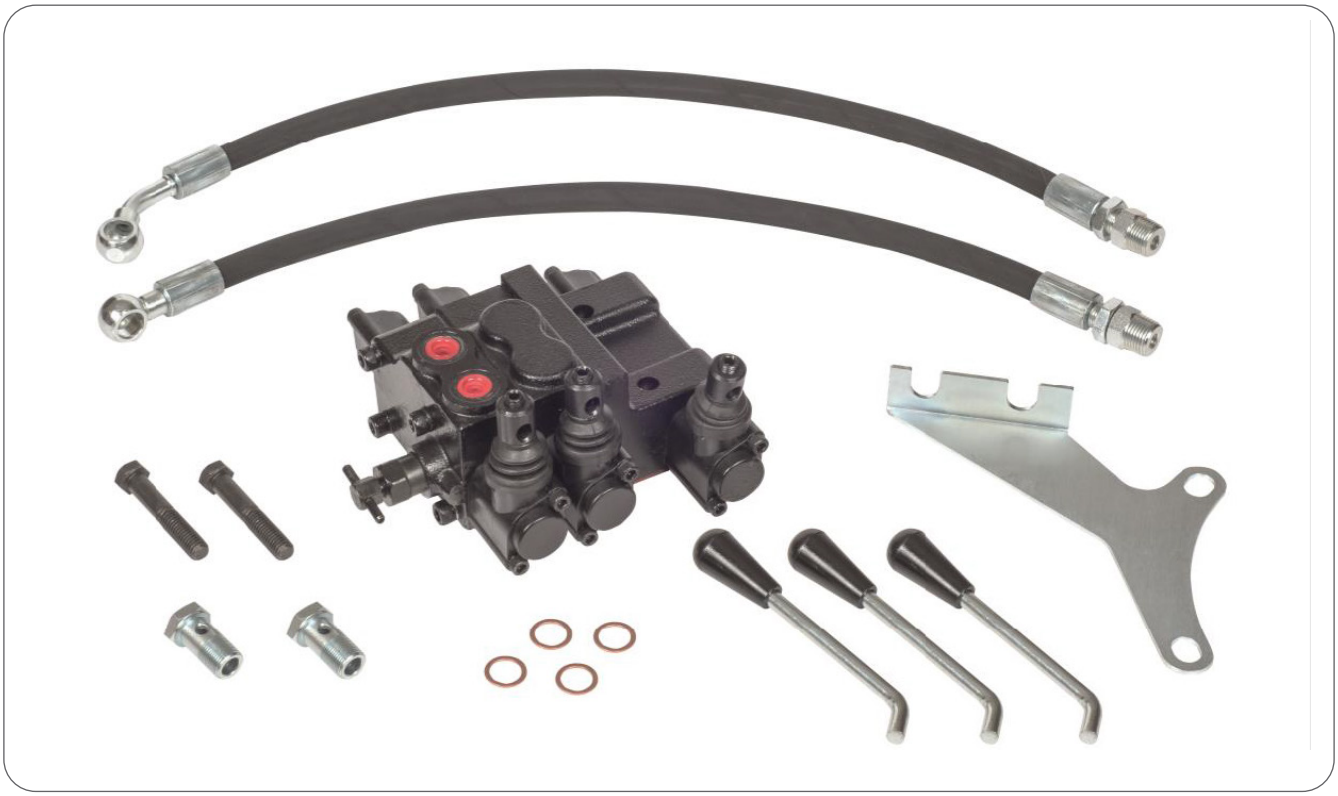

CONTENTS

Working Conditions	3
Dimensional Data	3
Hydraulic Circuit	3
Performance Data And Curve	3
Ports And Mounting Face	3
Ordering Codes And Installation	3

Additional Informations

Note: This catalog shows the product in the most standard configurations. For Other Configurations, more detailed information or special request, Please contact Customer Service Dpt.

Warning! :All specifications of this catalog refer to the standard product at this date (10/2019). ORVAL, oriented to a continuous improvement, reserves the right to discontinue, modify or revise the specifications, without notice.

ORVAL IS NOT RESPONSIBLE FOR ANY DAMAGE CAUSED BY
AN INCORRECT USE OF THE PRODUCT.

WORKING CONDITIONS

Nominal Flow Rating / Displacement	45 l/min	12 U.S.G.P.M
Maximum Working Pressure	315 Bar	4600 PSI
Max Back Pressure	25 Bar	360 PSI
Oil Temperture with NBR Seals	-20 to 80 C°	-4 to 176 F °
with FPM (Viton) Seals	-20 to 100 C°	-4 to 212 F °
Oil Viscosity – Operating Range	From 10 to 75 mm2/s	From 10 to 75 cSt
Minumum / Maximum	10 / 400 mm2/s	10 / 400 cSt
Oil Filtration	≤30 µ	
Ambiant Temperture Range	-35 to 60 C°	-31 to 140 F °
Number Of Spools	1 to 3	
İnternal Leakage (at 100 bar (1450 PSI), 40C° (110 F°), 46 cSt – A(B)—T)	3 cm3/min	0,18 in3/min
Max. Level Of Contamination	19/16 - ISO 4406	

Not: This catalogue shows technical specifications measured with mineral oil of 46 mm2/s-46 cSt viscosity at 40 C° temparture.

Features

• Simple, compact and heavy duty designed sectional truck mounted valves from 1 to 3 sections for open center hydraulic systems.
• Interchangeable spool diametre is 16 mm – 0,63 in.
• It can be work working section and truck lift for some time.
• It has low tank pressure for additional tank line.
• It can be use single and double acting for only last working section.



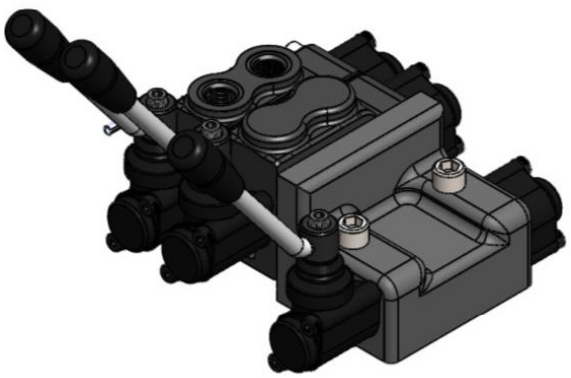

DIMENSIONAL DATA

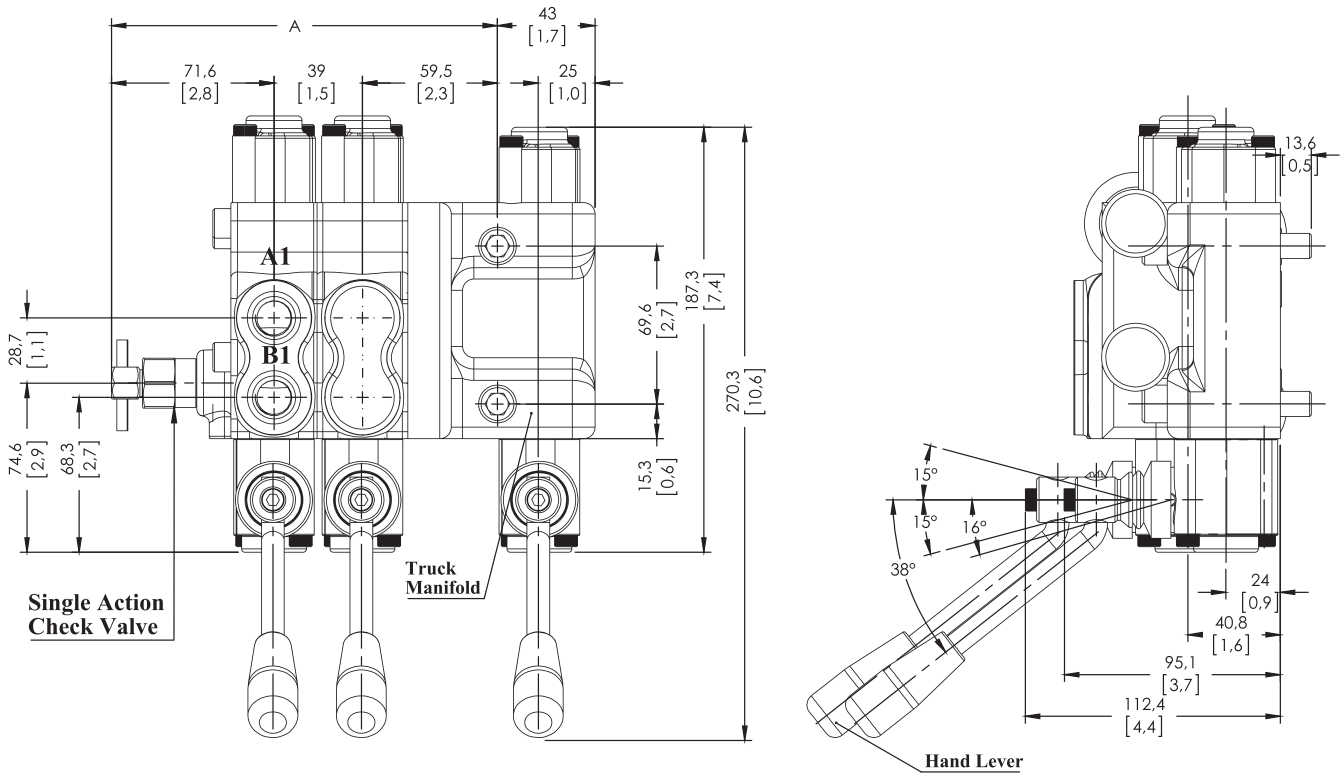

TYPE	A		WEIGHT	
	mm	in	Kg	lb
ORV-MF-2	131	5,16	7,53	16,6
ORV-MF-2+H	170	6,69	9,83	21,67
ORV-MF-4	170	6,69	11,24	24,78
ORV-MF-4+H	209	8,23	13,55	29,87
ORV-MF-6	209	8,23	14,95	32,96

STANDARD THREADS

PORT	BSP (Iso 228)		UN-UNF (Iso 11926-1)	Metric (Iso 262)
	3/8" Series	½"Series		
P Inlet			Plate Mounted	
A-B Ports	G 3/8	G 1/2	9/16-18 UNF	M18x1.5
T Outlet			Plate Mounted	

Compatible Models

Massey Ferguson (Old All Models) And
100 Series – 135, 148, 165, 175, 178, 185, 188
200 Series – 230, 240, 245, 250, 260, 265, 275, 290, 298
300 Series – 362, 365, 372, 375, 390, 398, 399
500 Series – 550, 560, 565, 590, 595

HYDRAULIC CIRCUIT

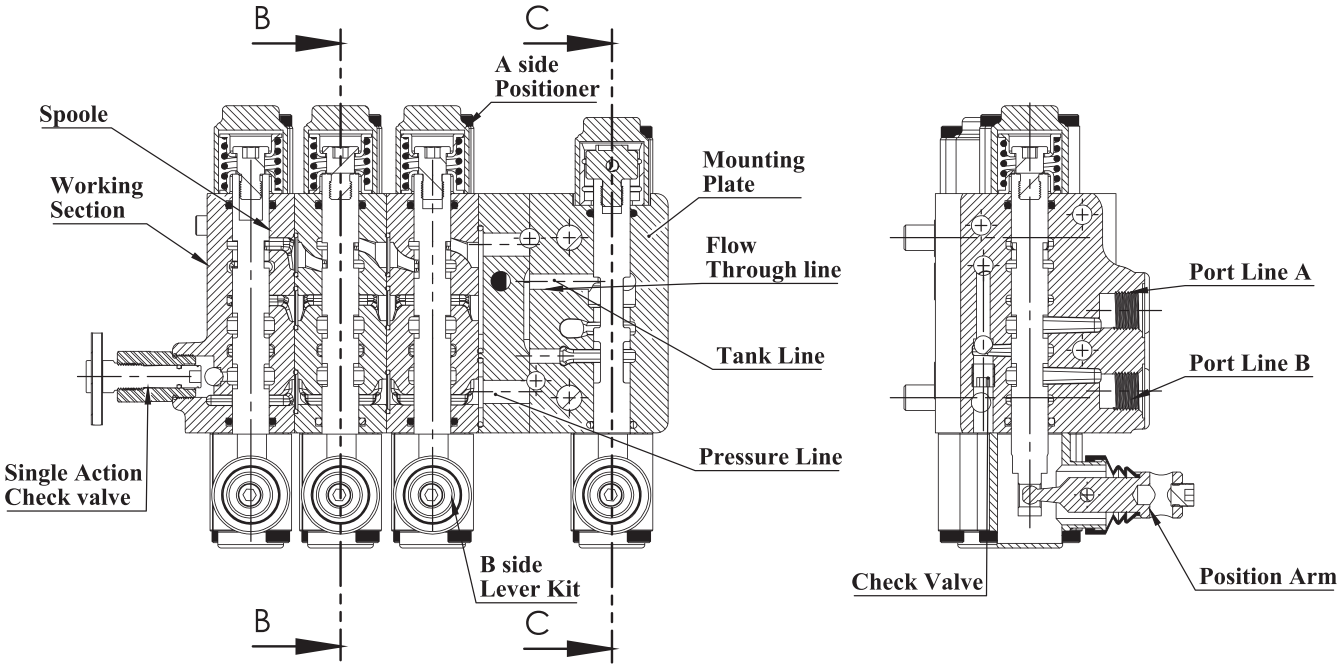

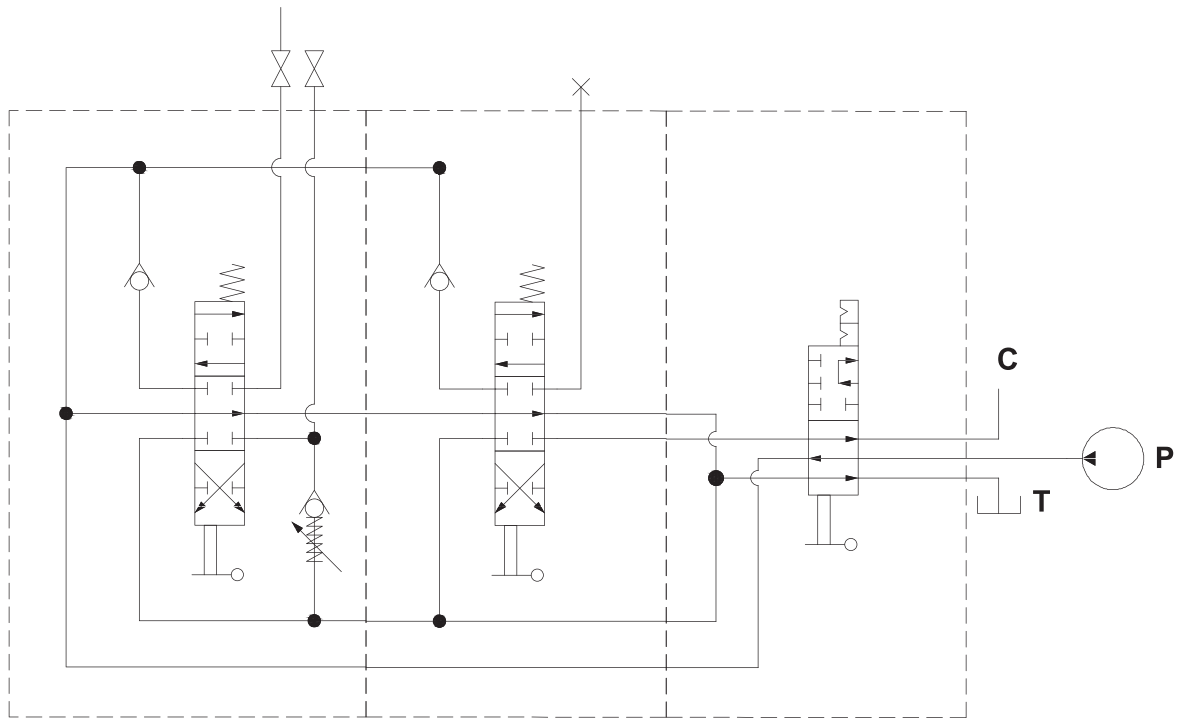

Order Code ORV – MF – 2+H

PERFORMANCE DATA AND CURVE

Open Center - Pressure Drop (P-T)

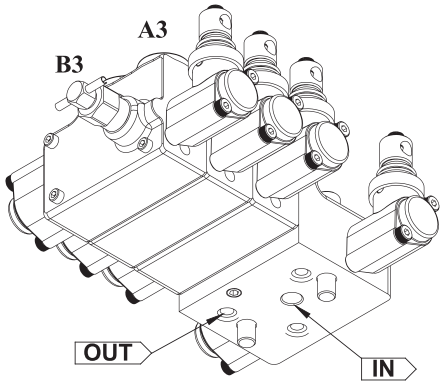

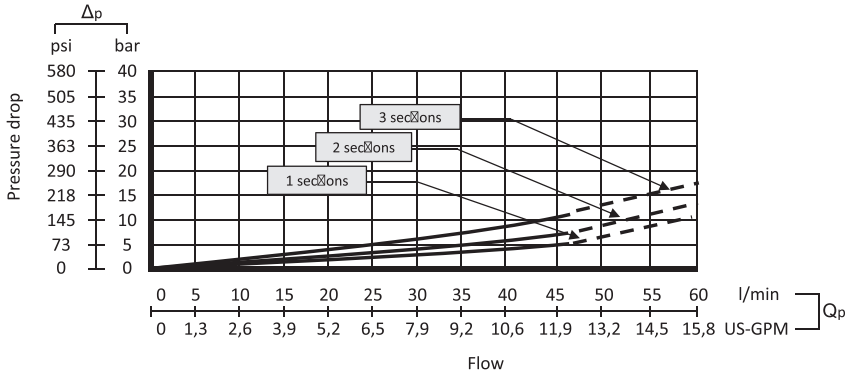

Inlet to Work Port - Pressure Drop (P-A/B)

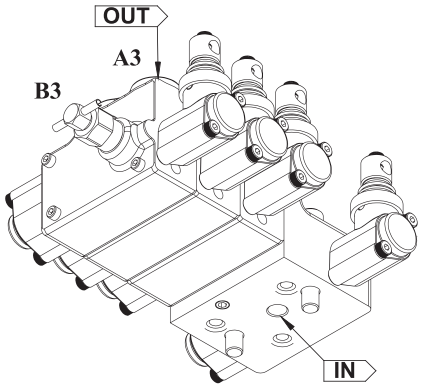

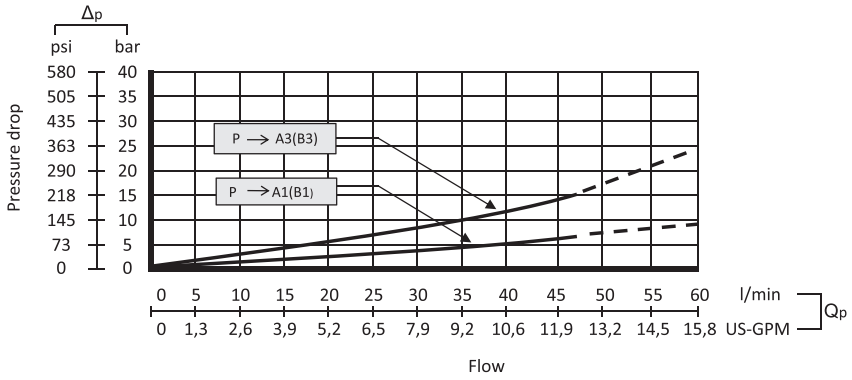

Work Port to Outlet - Pressure Drop (A/B-T)

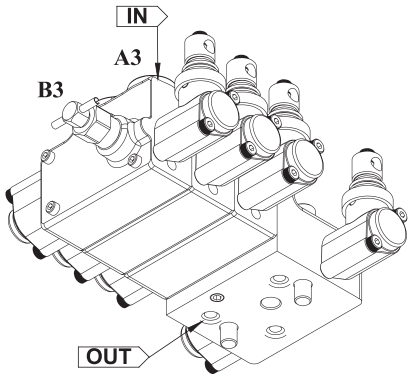

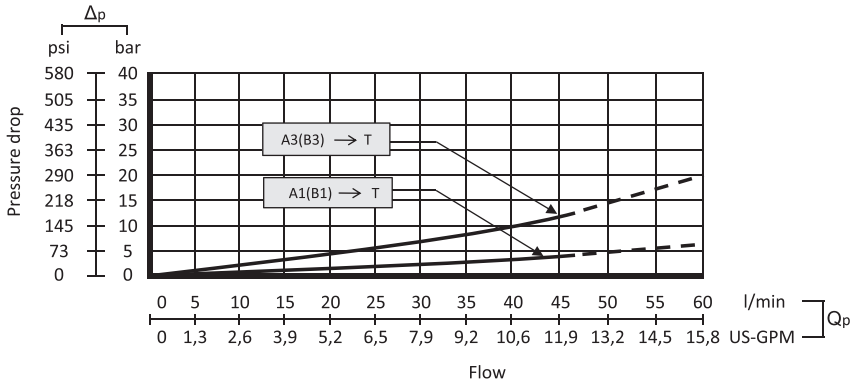

PORTS AND MOUNTING FACE

Port Directional And Type

Port Appearance

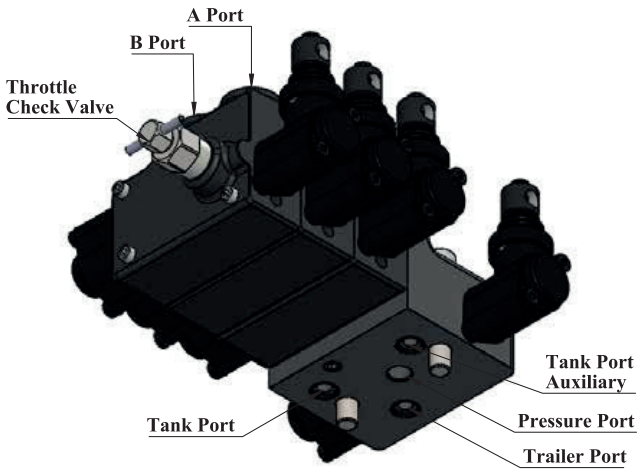

Diagram

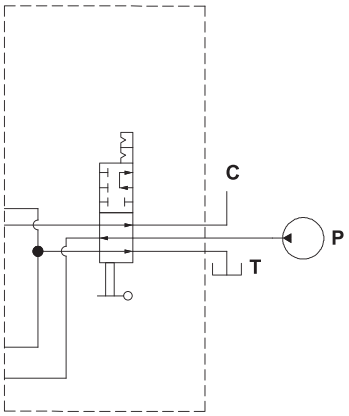

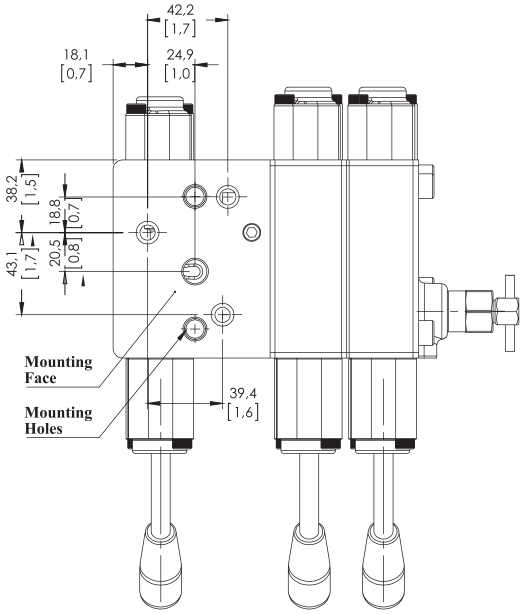

Mounting Face
Technical
Dimension

ORDERING CODES AND INSTALLATION

Order Code

ORV - MF - 2 + H

- Truck Hydraulic
- Output (2-4-6)
- Type (Massey Ferguson)
- Base Code "0"

MF-2 (1 section - 2 Output)
MF-2 +H (1 section - 2 Output And Truck Hydraulic)
MF-4 (2 section - 4 Output)
MF-4 +H (2 section - 4 Output And Truck Hydraulic)
MF-6 (3 section - 6 Output)
MF-6 +H (3 section - 6 Output And Truck Hydraulic)

Installation

The ORV MF valve is assembled and tested as per the technical specification of this catalog. Before the final installation on your equipment, follow the below recommendation:

• The valve can be assembled in any position, in order to prevent body deformation and spool sticking mount the product on a flat surface;

• In order to prevent the possibility of water entering the lever box and spool control kit, do not use high pressure wash down directly on the valve;

• Before painting, ensure plastic port plugs are tightly in place.

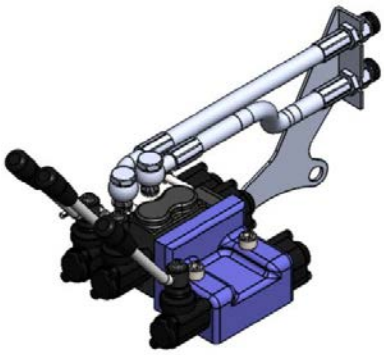

MODEL	HOSE	COUPLING HOLES 3/8"	COPPER WASHER	SHEET CONNECTION	CONNECTION BOLT	LEVER COUNT
ORV - MF-2	56 cm - 1 Pcs/ 56 cm - 1 Pcs	2 Pcs	4 Pcs		UNC -7/16-2 1/2" - 2 Pcs	2 pcs
ORV - MF-2+H	56 cm - 1 Pcs/ 56 cm - 1 Pcs	2 Pcs	4 Pcs		UNC -7/16-2 1/2" - 2 Pcs	3 pcs
ORV - MF-4	62 cm - 2 Pcs/ 62 cm - 2 Pcs	4 Pcs	8 Pcs		UNC -7/16-2 1/2" - 2 Pcs	3 pcs
ORV - MF-4+H	62 cm - 2 Pcs/ 62 cm - 2 Pcs	4 Pcs	8 Pcs		UNC -7/16-2 1/2" - 2 Pcs	4 pcs
ORV - MF-6	62 cm - 3 Pcs/ 62 cm - 3 Pcs	6 Pcs	12 Pcs		UNC -7/16-2 1/2" - 2 Pcs	4 pcs

ORVAL HYDRAULIC

SPECIAL TRACTOR VALVES

ORV-STEYR

CE

TÜV International Certification
TÜV THÜRINGEN
CERT
AZAV
15 190 17185
TIC

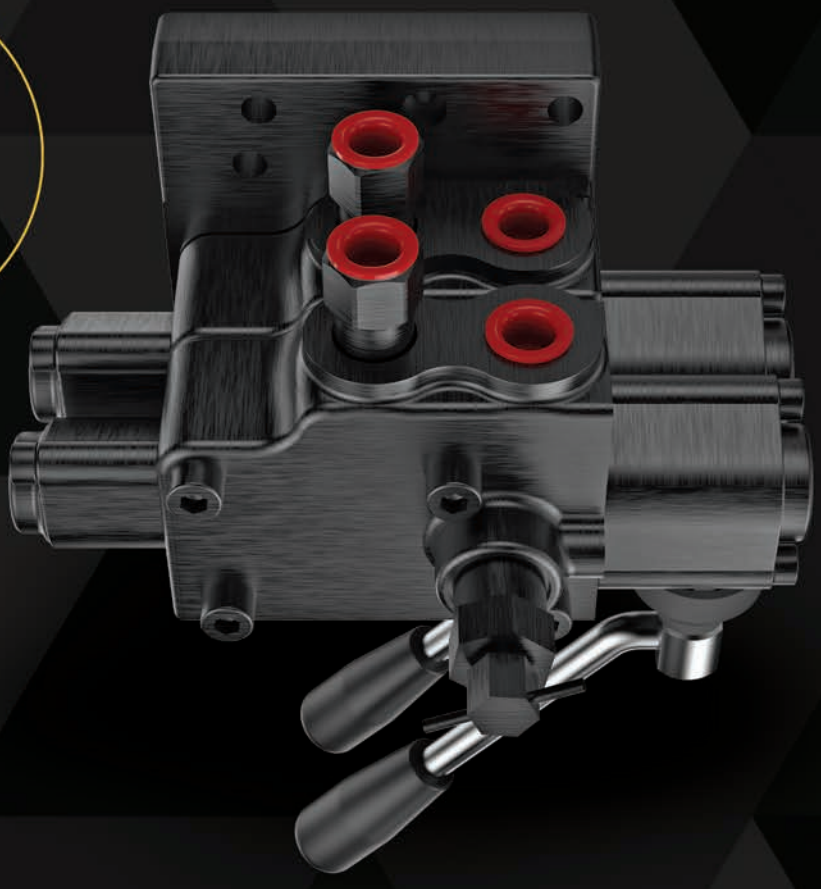

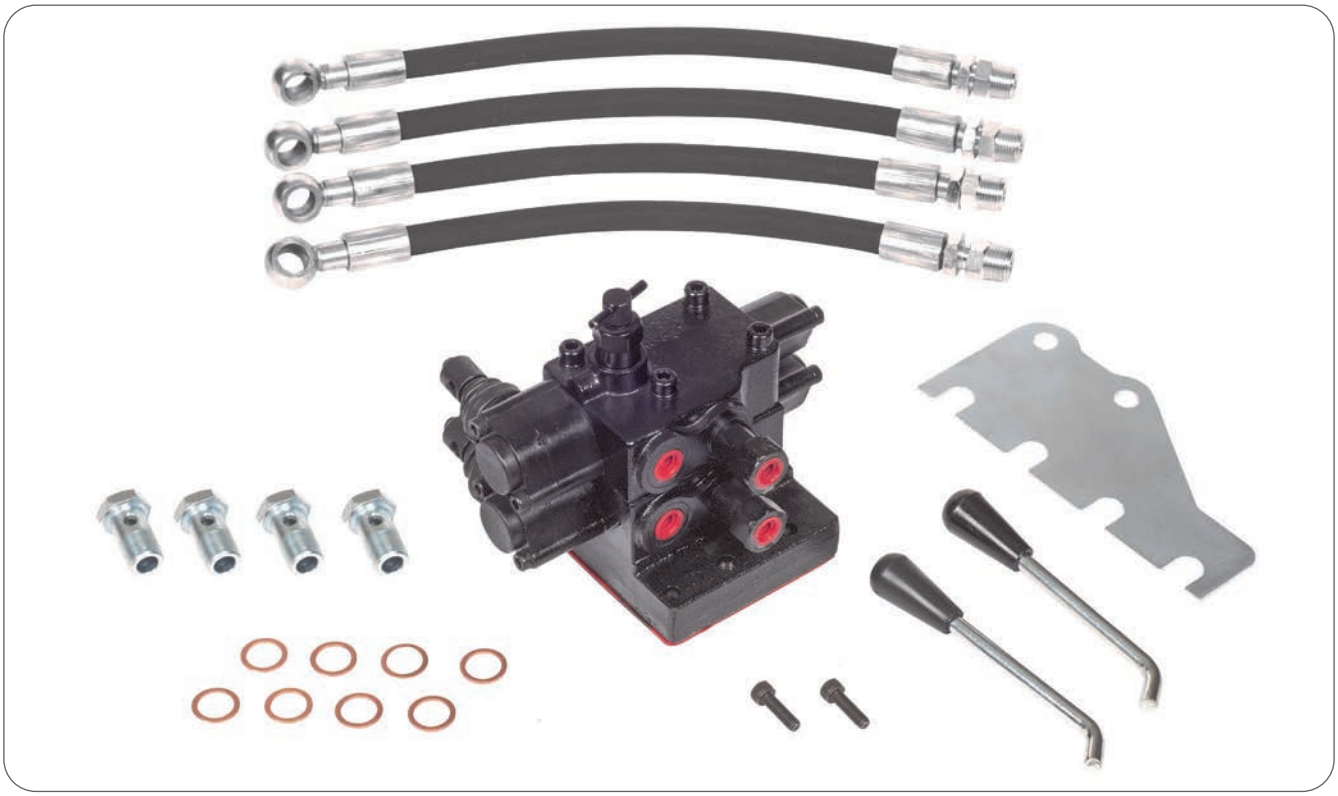

CONTENTS

Working Conditions	3
Dimensional Data	3
Hydraulic Circuit	3
Performance Data And Curve	3
Ports And Mounting Face	3
Ordering Codes And Installation	3

Additional Informations

Note: This catalog shows the product in the most standard configurations. For Other Configurations, more detailed information or special request, Please contact Customer Service Dpt.

Warning! :All specifications of this catalog refer to the standard product at this date (10/2019). ORVAL, oriented to a continuous improvement, reserves the right to discontinue, modify or revise the specifications, without notice.

ORVAL IS NOT RESPONSIBLE FOR ANY DAMAGE CAUSED BY
AN INCORRECT USE OF THE PRODUCT.

WORKING CONDITIONS

Nominal Flow Rating / Displacement	45 l/min	12 U.S.G.P.M
Maximum Working Pressure	315 Bar	4600 PSI
Max Back Pressure	25 Bar	360 PSI
Oil Temperture with NBR Seals	-20 to 80 C°	-4 to 176 F °
with FPM (Viton) Seals	-20 to 100 C°	-4 to 212 F °
Oil Viscosity – Operating Range	From 10 to 75 mm2/s	From 10 to 75 cSt
Minumum / Maximum	10 / 400 mm2/s	10 / 400 cSt
Oil Filtration	≤30 µ	
Ambiant Temperture Range	-35 to 60 C°	-31 to 140 F °
Number Of Spools	1 to 3	
İnternal Leakage (at 100 bar (1450 PSI), 40C° (110 F°), 46 cSt – A(B)–T)	3 cm3/min	0,18 in3/min
Max. Level Of Contamination	19/16 - ISO 4406	

Not: This catalogue shows technical specifications measured with mineral oil of 46 mm2/s-46 cSt viscosity at 40 C° temparture.

Features

• Simple, compact and heavy duty designed sectional truck mounted valves from 1 to 3 sections for open center hydraulic systems.
• Interchangeable spool diametre is 16 mm – 0,63 in.
• It can be work working section and truck lift for some time.
• It has low tank pressure for additional tank line.
• It can be use single and double acting for only last working section.

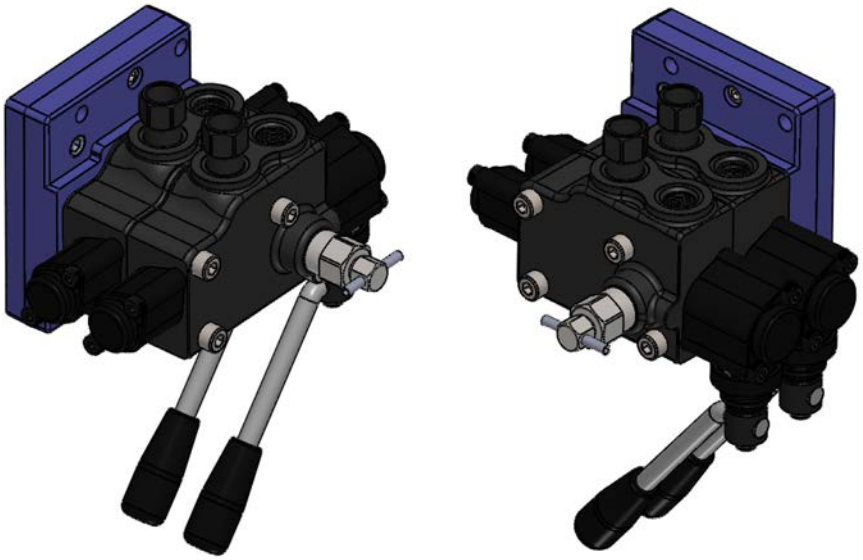

DIMENSIONAL DATA

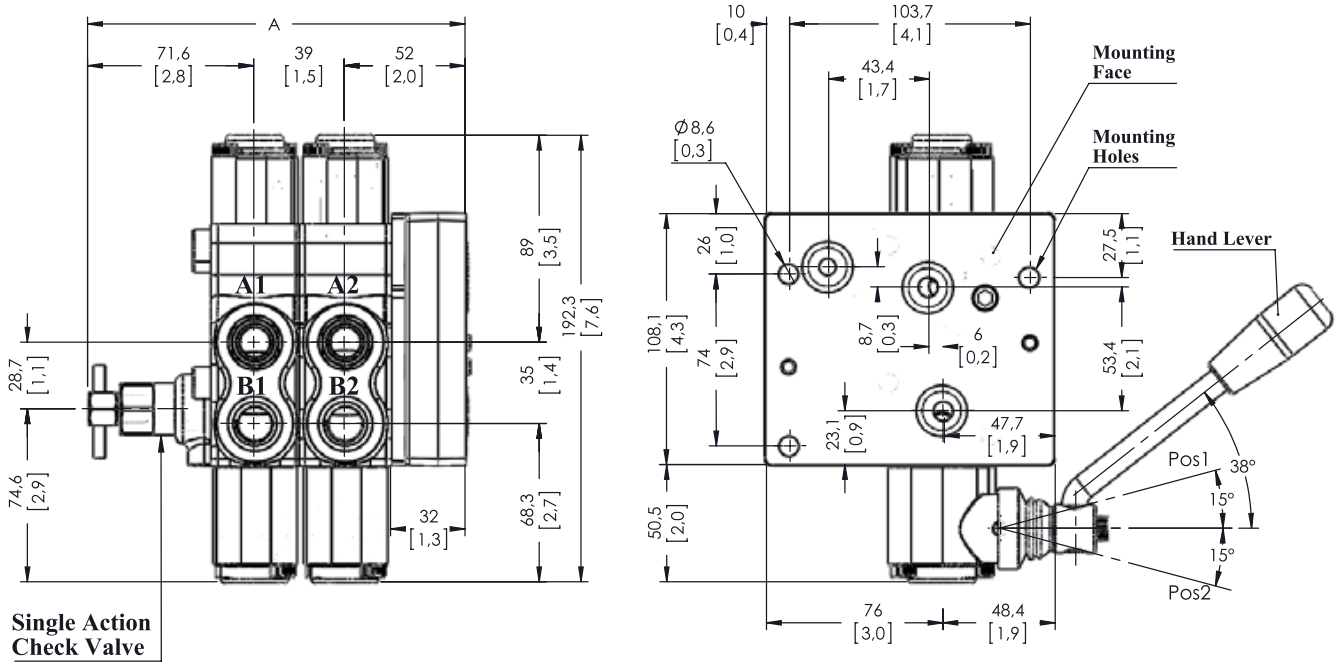

TYPE	A		WEIGHT	
	mm	in	Kg	lb
ORV-STR - 2	123,5	4,86	6,50	13,33
ORV-STR - 4	162,5	6,40	10,00	22,05
ORV-STR - 6	201,5	7,93	13,50	29,76

STANDARD THREADS

PORT	BSP (Iso 228)		UN-UNF (Iso 11926-1)	Metric (Iso 262)
	3/8" Series	½"Series		
P Inlet	G 3/8	G 1/2	Plate Mounted	M18x1.5
A-B Ports	G 3/8	G 1/2	9/16-18 UNF	M18x1.5
T Outlet	G 3/8	G 1/2	Plate Mounted	M18x1.5

Compatible Models

Steyr All Models

HYDRAULIC CIRCUIT

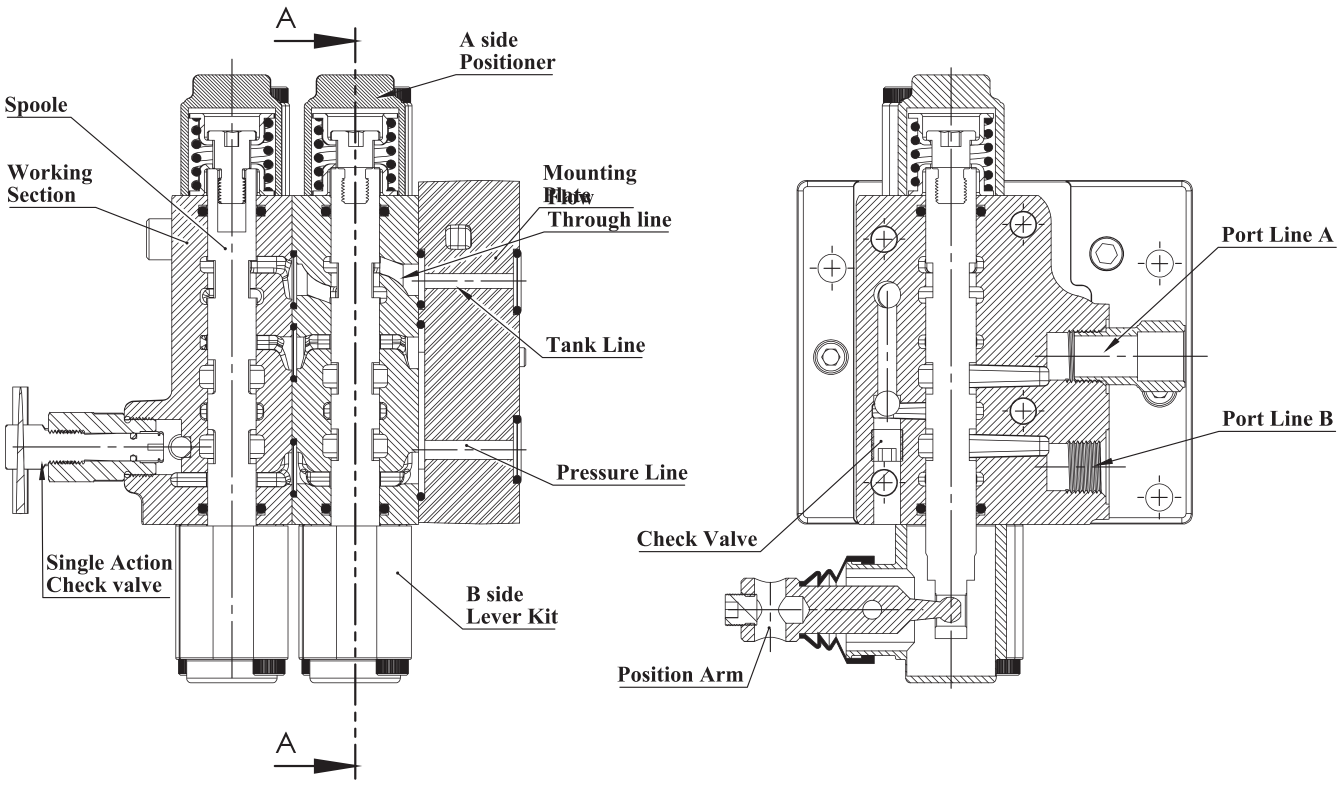

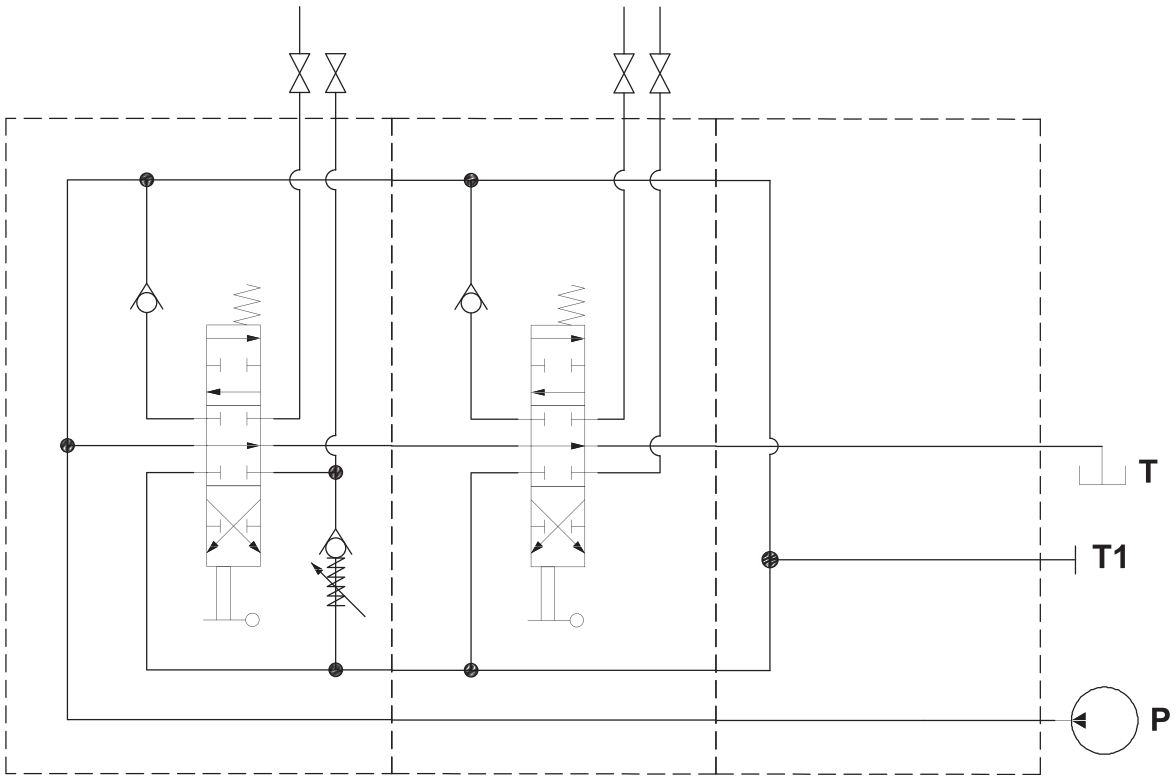

Order Code ORV – STR – 4

PERFORMANCE DATA AND CURVE

Open Center - Pressure Drop (P-T)

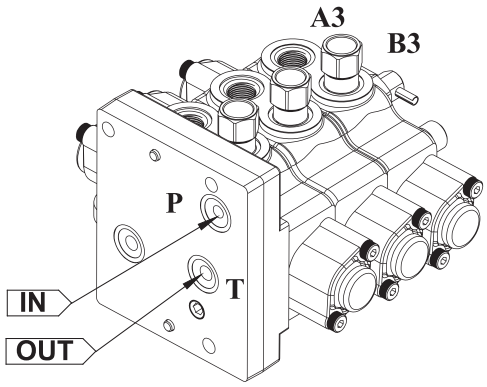

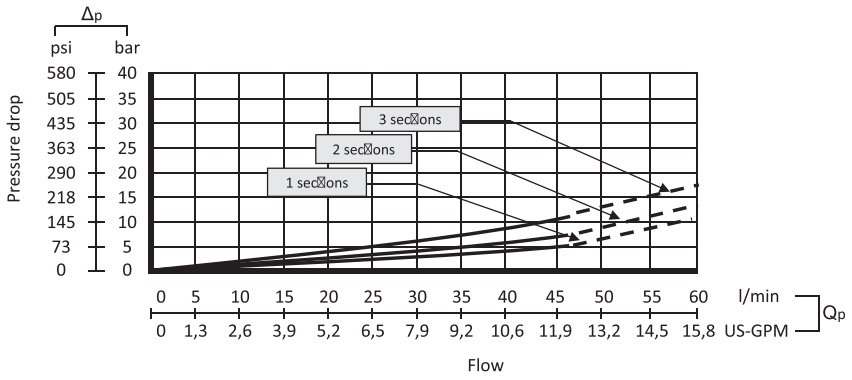

Inlet to Work Port - Pressure Drop (P-A/B)

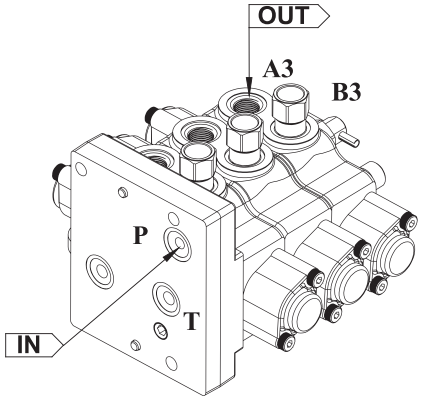

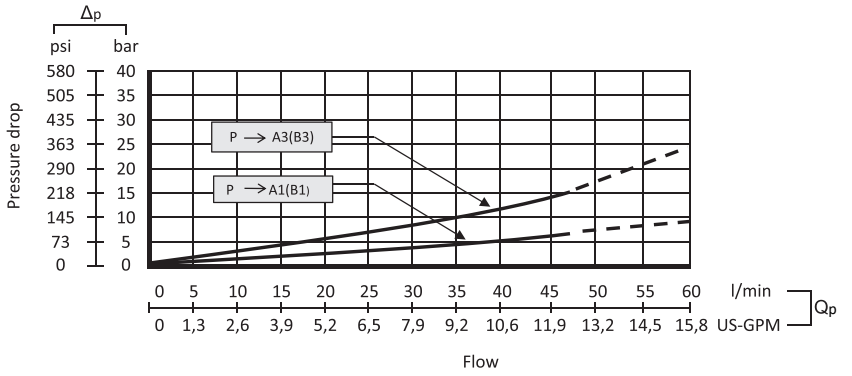

Work Port to Outlet - Pressure Drop (A/B-T)

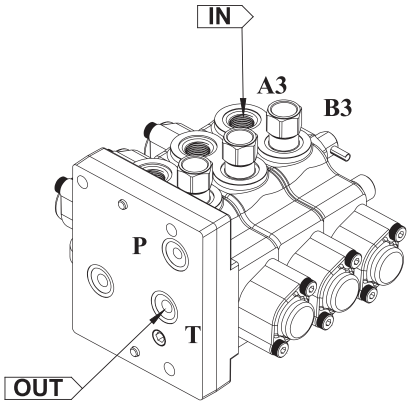

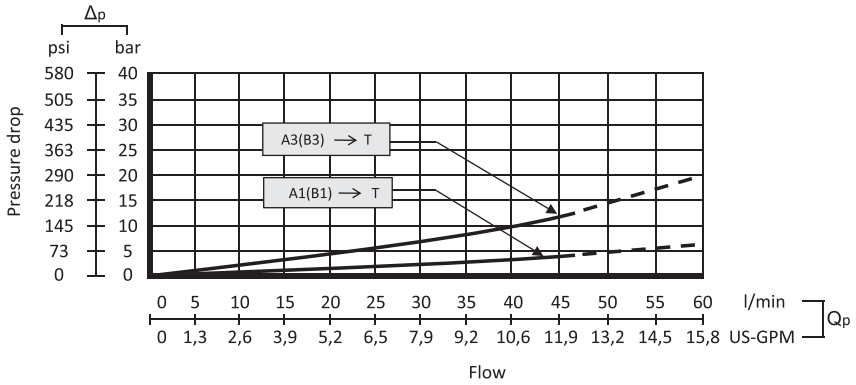

PORTS AND MOUNTING FACE

Port Directional And Type

Port Appearance

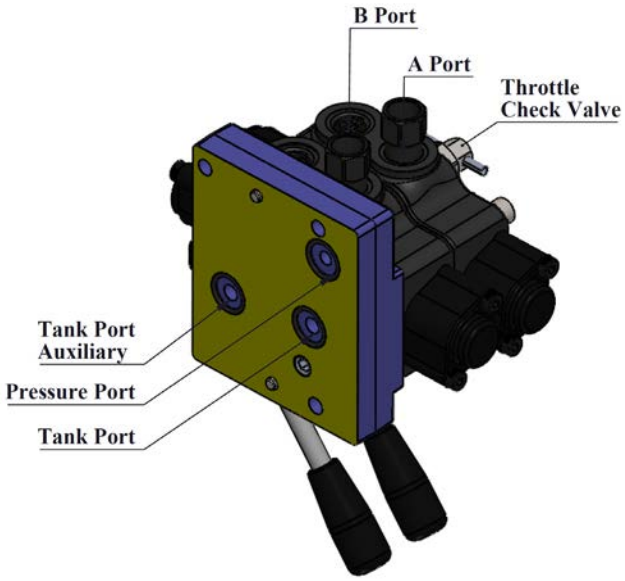

Diagram

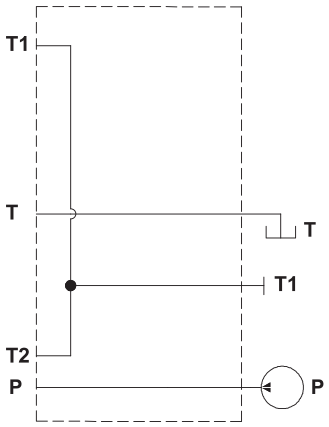

ORDERING CODES AND INSTALLATION

Order Code

ORV – STR - 4

- Output (2-4-6)
- Type (Steyr)
- Base Code "0"

STR-2 (1 section - 2 Output)
STR-4 (2 section - 4 Output)
STR-6 (3 section - 6 Output)

Installation

The ORV STR valve is assembled and tested as per the technical specification of this catalog. Before the final installation on your equipment, follow the below recommendation:

• The valve can be assembled in any position, in order to prevent body deformation and spool sticking mount the product on a flat surface;

• In order to prevent the possibility of water entering the lever box and spool control kit, do not use high pressure wash down directly on the valve;

• Before painting, ensure plastic port plugs are tightly in place.

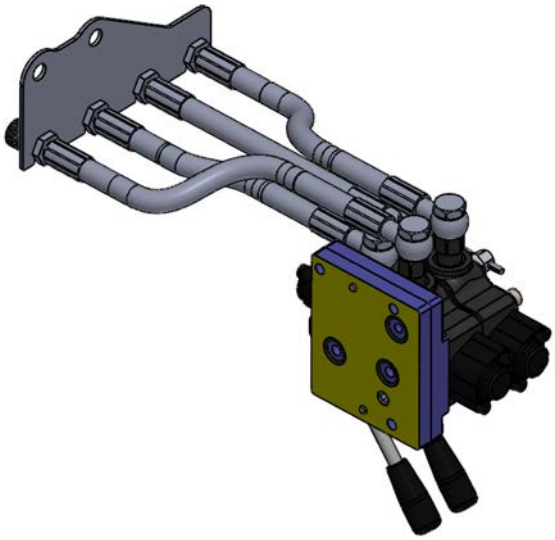

MODEL	HOSE	COUPLING HOLES 3/8"	COPPER WASHER	SHEET CONNECTION	CONNECTION BOLT	LEVER COUNT
ORV - STR-2	36 cm - 1 Pcs/ 33 cm - 1 Pcs	2 Pcs	4 Pcs		DIN 912 M6x20 - 2 Pcs	1 pcs
ORV - STR-4	36 cm - 2 Pcs/ 33 cm - 2 Pcs	4 Pcs	8 Pcs		DIN 912 M6x20 - 2 Pcs	2 pcs
ORV - STR-6	36 cm - 3 Pcs/ 33 cm - 3 Pcs	6 Pcs	12 Pcs		DIN 912 M6x20 - 2 Pcs	3 pcs

ORVAL HYDRAULIC

SPECIAL TRACTOR
VALVES

ORV-FRD3

CE

TÜV International Certification
TÜV THÜRINGEN
CERT
AZAV
15 190 17185
TIC



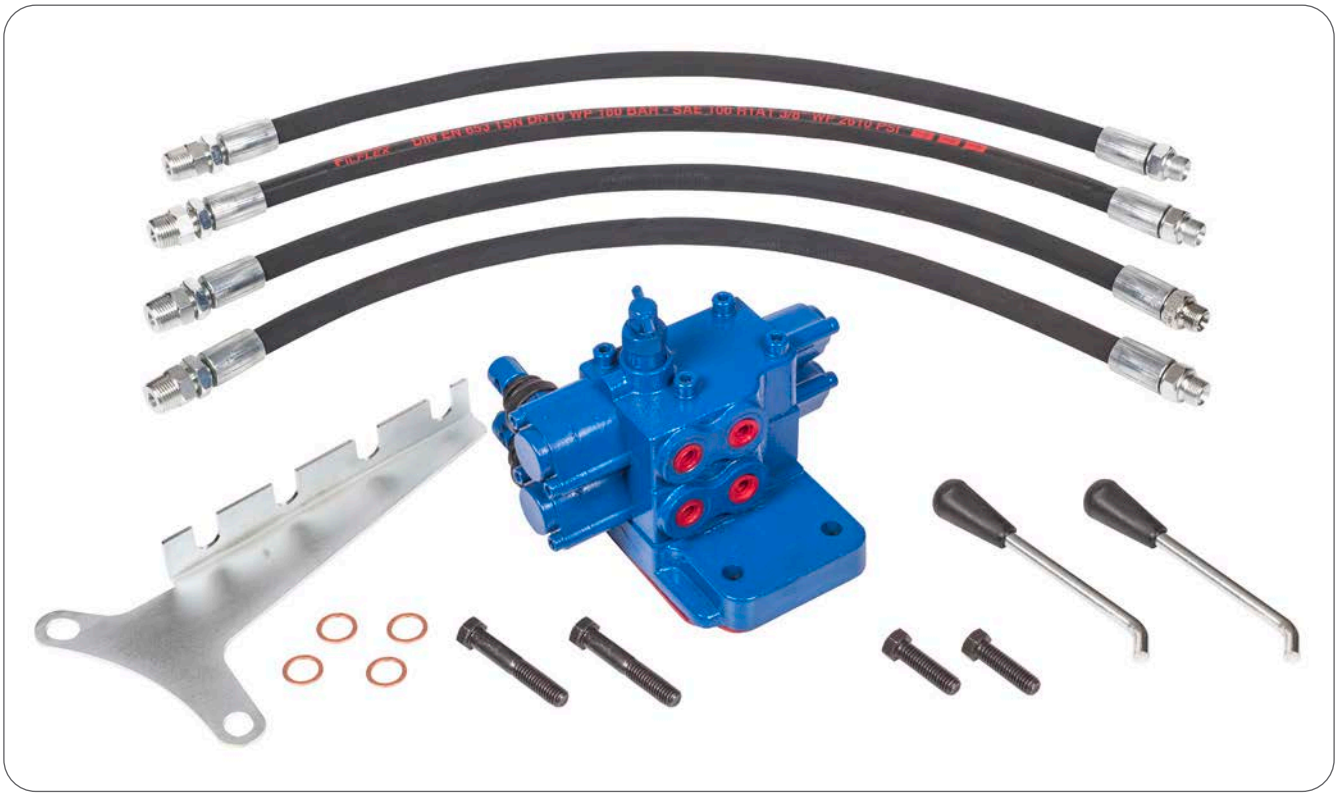

CONTENTS

Working Conditions	3
Dimensional Data	3
Hydraulic Circuit	3
Performance Data And Curve	3
Ports And Mounting Face	3
Ordering Codes And Installation	3

Additional Informations

Note: This catalog shows the product in the most standard configurations. For Other Configurations, more detailed information or special request, Please contact Customer Service Dpt.

Warning! :All specifications of this catalog refer to the standard product at this date (10/2019) . ORVAL, oriented to a continuous improvement, reserves the right to discontinue, modify or revise the specifications, without notice.

ORVAL IS NOT RESPONSIBLE FOR ANY DAMAGE CAUSED BY
AN INCORRECT USE OF THE PRODUCT.

WORKING CONDITIONS

Nominal Flow Rating / Displacement	45 l/min	12 U.S.G.P.M
Maximum Working Pressure	315 Bar	4600 PSI
Max Back Pressure	25 Bar	360 PSI
Oil Temperture with NBR Seals	-20 to 80 C°	-4 to 176 F °
with FPM (Viton) Seals	-20 to 100 C°	-4 to 212 F °
Oil Viscosity – Operating Range	From 10 to 75 mm2/s	From 10 to 75 cSt
Minumum / Maximum	10 / 400 mm2/s	10 / 400 cSt
Oil Filtration	≤30 µ	
Ambiant Temperture Range	-35 to 60 C°	-31 to 140 F °
Number Of Spools	1 to 3	
İnternal Leakage (at 100 bar (1450 PSI), 40C° (110 F°), 46 cSt – A(B)–T)	3 cm3/min	0,18 in3/min
Max. Level Of Contamination	19/16 - ISO 4406	

Not: This catalogue shows technical specifications measured with mineral oil of 46 mm2/s-46 cSt viscosity at 40 C° temparture.

Features

• Simple, compact and heavy duty designed sectional truck mounted valves from 1 to 3 sections for open center hydraulic systems.
• Interchangeable spool diametre is 16 mm – 0,63 in.
• It can be work working section and truck lift for some time.
• It has low tank pressure for additional tank line.
• It can be use single and double acting for only last working section.



DIMENSIONAL DATA

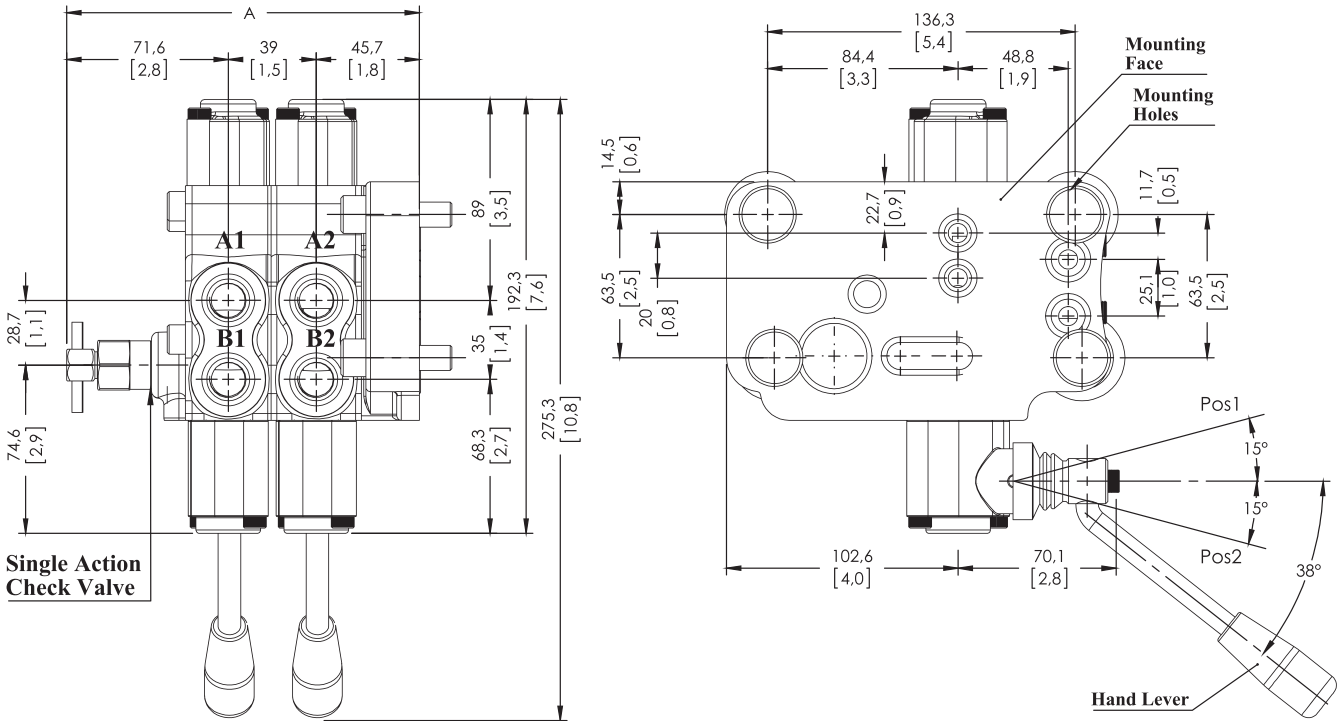

TYPE	A		WEIGHT	
	mm	in	Kg	lb
ORV-FRD 3-2	117,0	4,61	6,90	15,21
ORV-FRD 3-4	156,0	6,14	10,61	23,39
ORV-FRD 3-6	195,0	7,68	14,32	31,57

STANDARD THREADS

PORT	BSP (Iso 228)		UN-UNF (Iso 11926-1)	Metric (Iso 262)
	3/8" Series	½"Series		
P Inlet			Plate Mounted	
A-B Ports	G 3/8	G 1/2	9/16-18 UNF	M18x1.5
T Outlet			Plate Mounted	

Compatible Models

Ford All Old Models
3000 Series – 2000, 2600, 3000, 3600, 4000, 4600

HYDRAULIC CIRCUIT

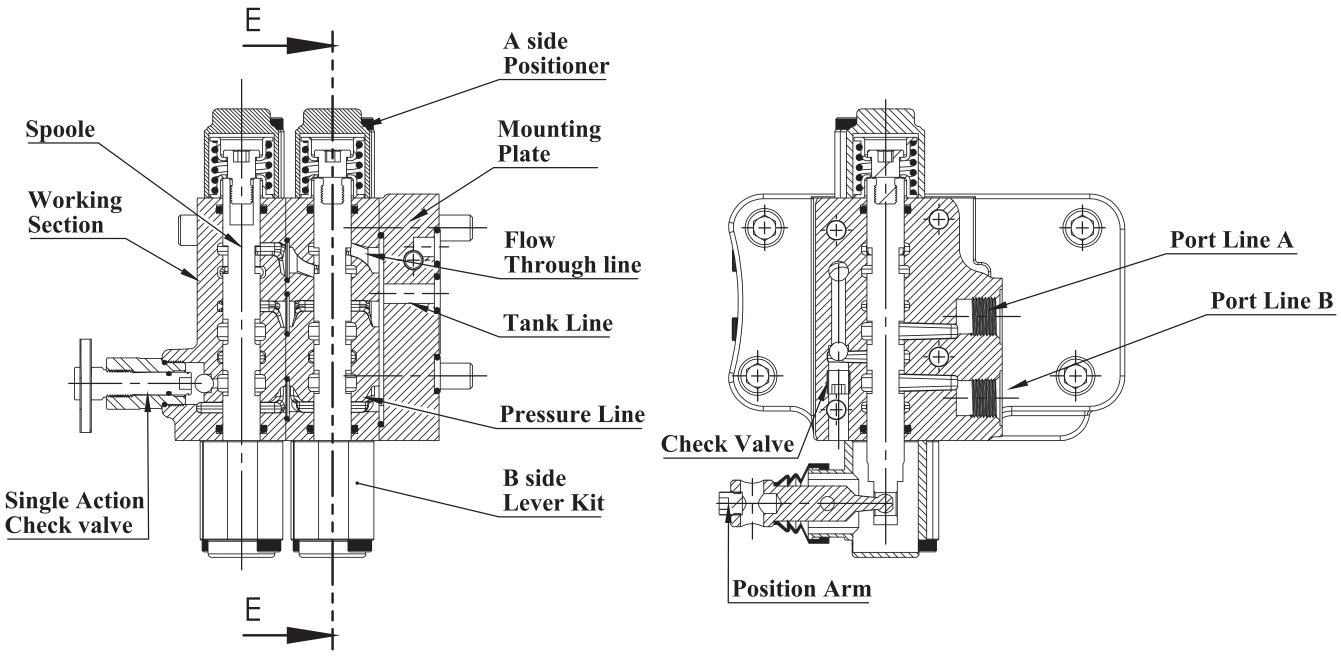

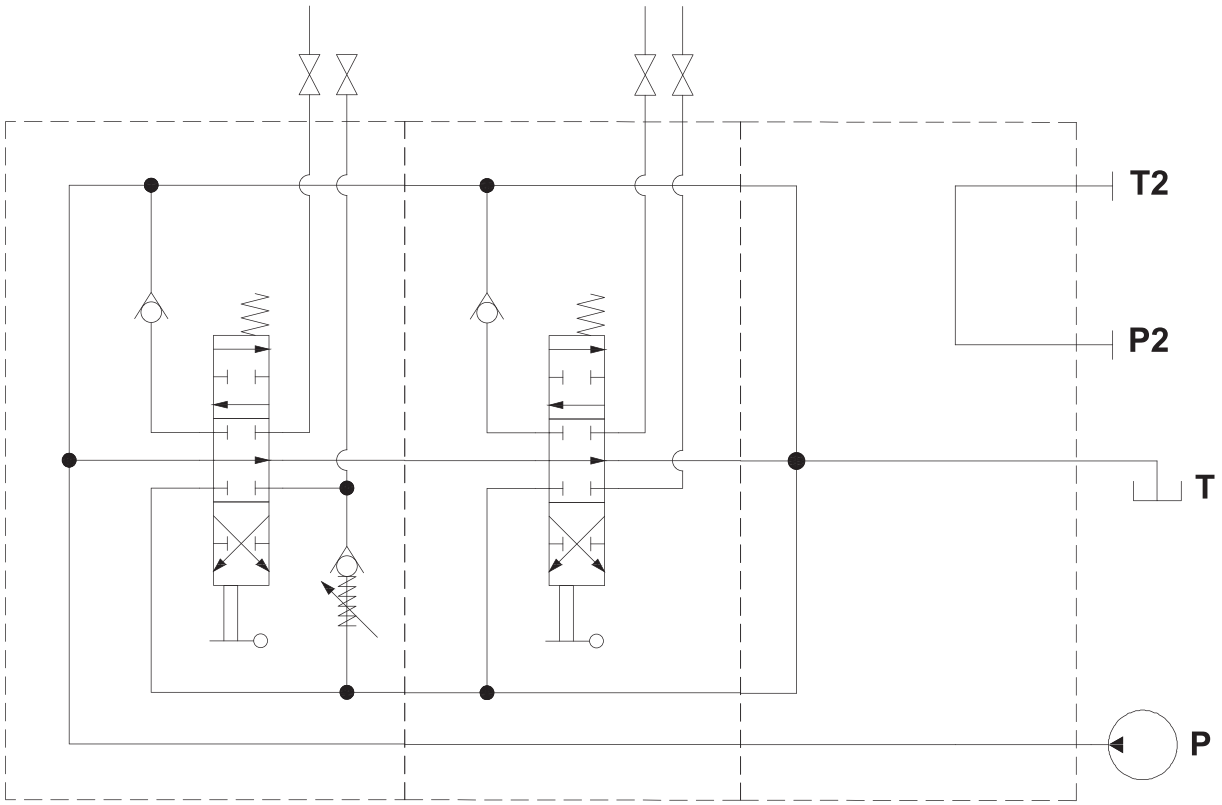

Order Code ORV – FRD 5 – 4

PERFORMANCE DATA AND CURVE

Open Center - Pressure Drop (P-T)

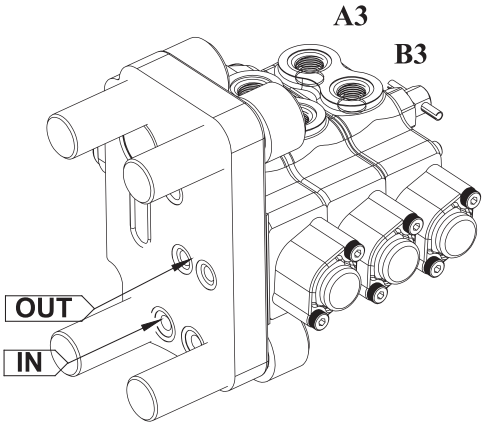

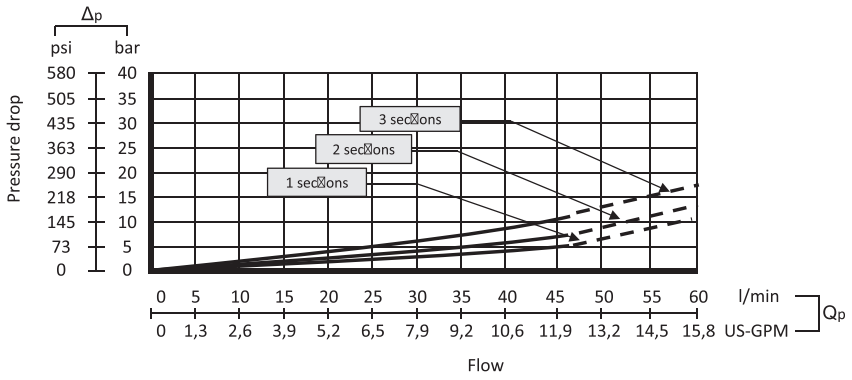

Inlet to Work Port - Pressure Drop (P-A/B)

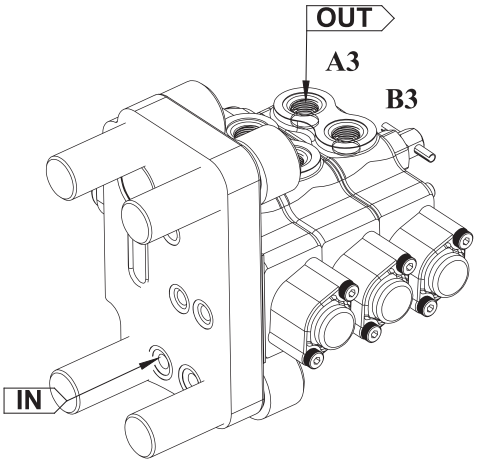

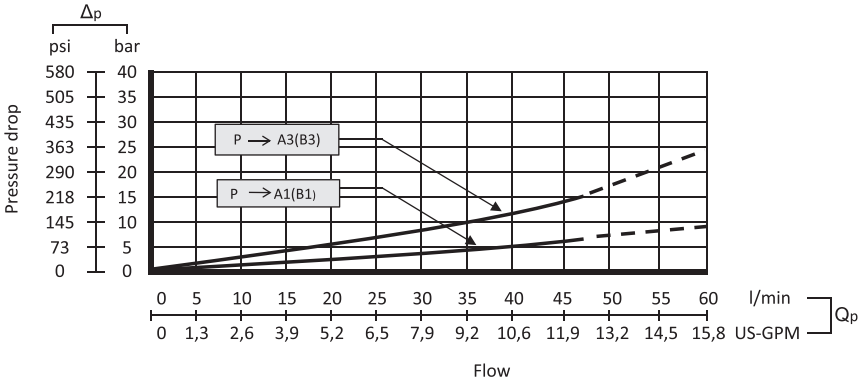

Work Port to Outlet - Pressure Drop (A/B-T)

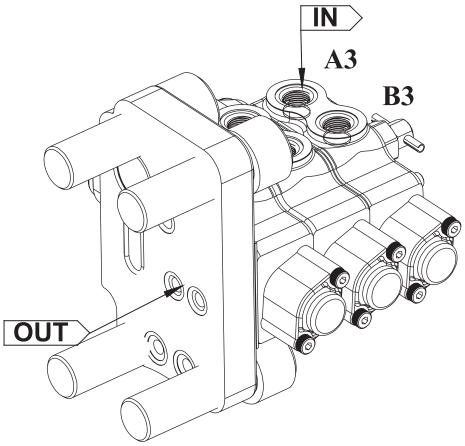

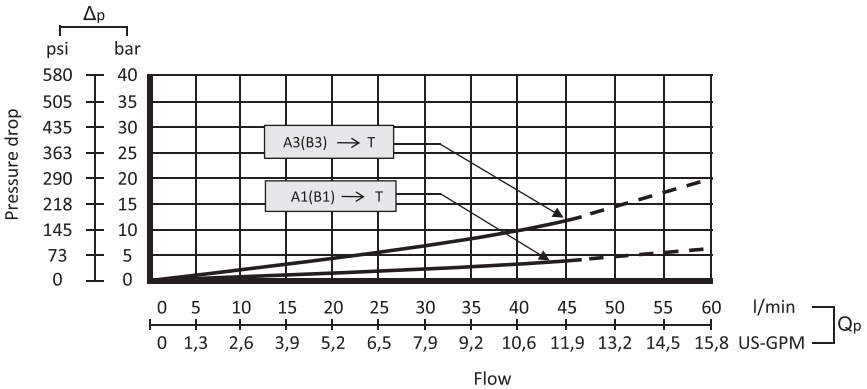

PORTS AND MOUNTING FACE

Port Directional And Type

Port Appearance

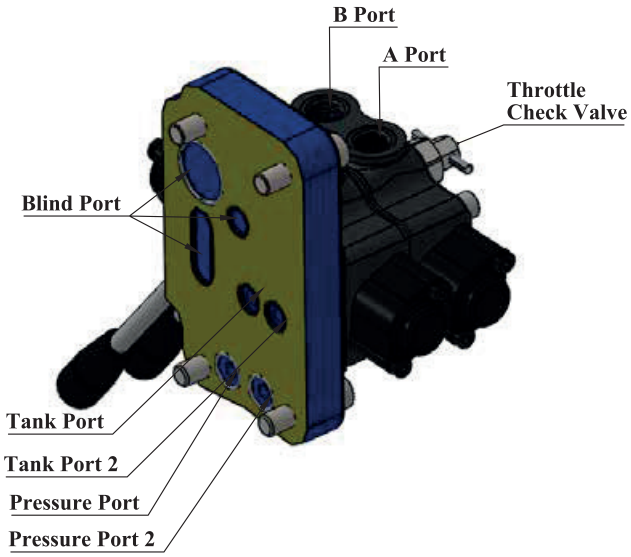

Diagram

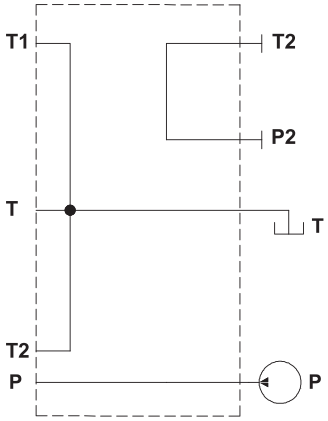

ORDERING CODES AND INSTALLATION

Order Code

ORV – FRD 3 - 4

- Output (2-4-6)
- Type (Ford 3000)
- Base Code "0"

FRD 3 - 2 (1 section - 2 Output)
FRD 3 - 4 (2 section - 4 Output)
FRD 3 - 6 (3 section - 6 Output)

Installation

The ORV FRD 3 valve is assembled and tested as per the technical specification of this catalog. Before the final installation on your equipment, follow the below recommendation:

• The valve can be assembled in any position, in order to prevent body deformation and spool sticking mount the product on a flat surface;

• In order to prevent the possibility of water entering the lever box and spool control kit, do not use high pressure wash down directly on the valve;

• Before painting, ensure plastic port plugs are tightly in place.

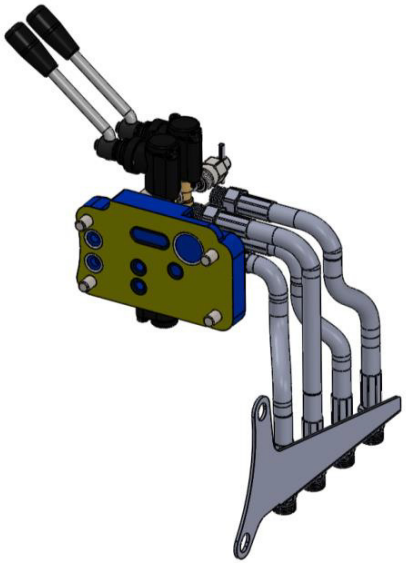

MODEL	HOSE	COPPER WASHER 3/8"	SHEET CONNECTION	CONNECTION BOLT	LEVER COUNT
ORV - FRD 3-2	63 cm - 2 Pcs	2 pcs		UNC-7/16-1 1/2"-2 Pcs UNC 7/16-2 1/2"-2 Pcs	1 pcs
ORV - FRD 3-4	63 cm - 4 Pcs	4 pcs		UNC-7/16-1 1/2"-2 Pcs UNC 7/16-2 1/2"-2 Pcs	2 pcs
ORV - FRD 3-6	63 cm - 6 Pcs	6 pcs		UNC-7/16-1 1/2"-2 Pcs UNC 7/16-2 1/2"-2 Pcs	3 pcs

ORVAL HYDRAULIC

SPECIAL TRACTOR VALVES

ORV-FRD5

CE

TÜV International Certification
TÜV THÜRINGEN
CERT
AZAV
15 190 17185
TIC

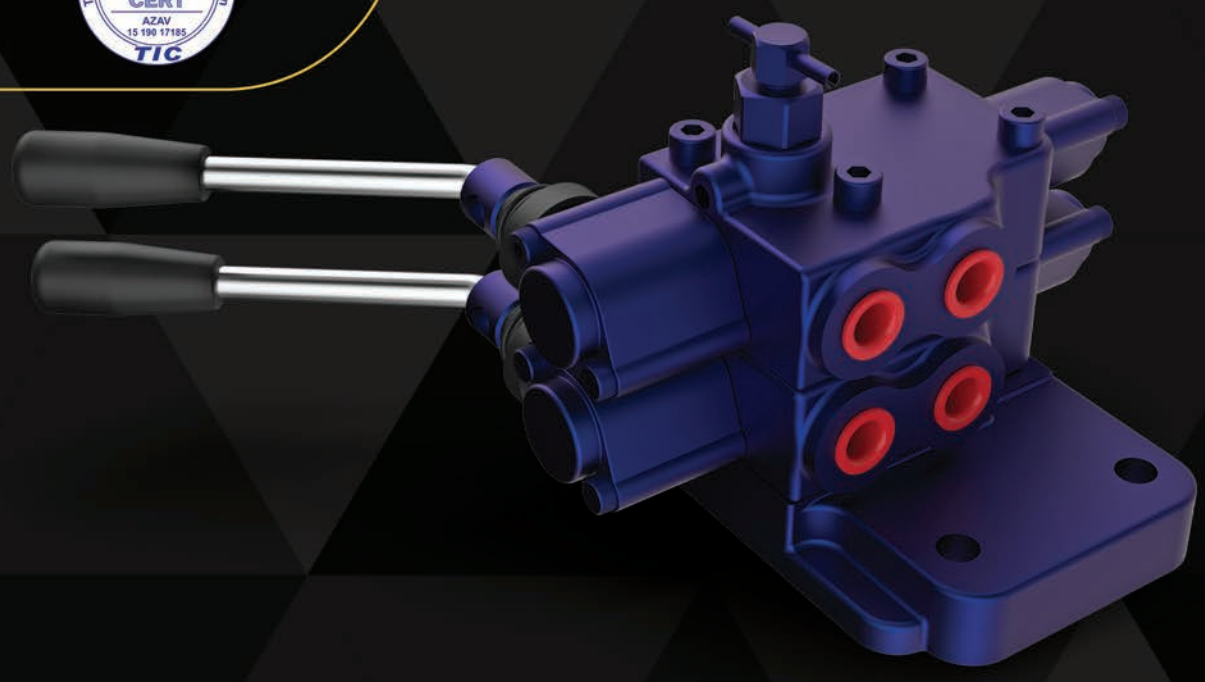

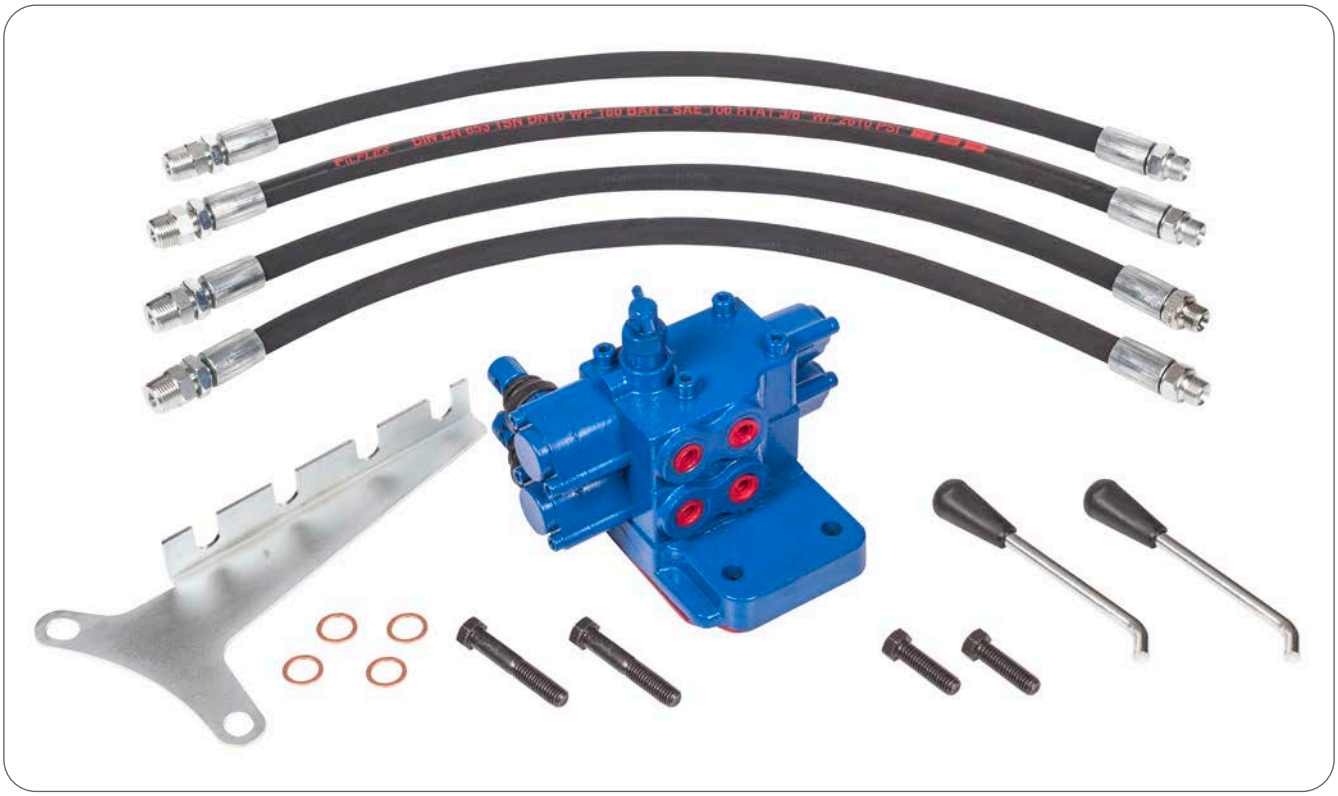

CONTENTS

Working Conditions	3
Dimensional Data	3
Hydraulic Circuit	3
Performance Data And Curve	3
Ports And Mounting Face	3
Ordering Codes And Installation	3

Additional Informations

Note: This catalog shows the product in the most standard configurations. For Other Configurations, more detailed information or special request, Please contact Customer Service Dpt.

Warning! :All specifications of this catalog refer to the standard product at this date (10/2019). ORVAL, oriented to a continuous improvement, reserves the right to discontinue, modify or revise the specifications, without notice.

ORVAL IS NOT RESPONSIBLE FOR ANY DAMAGE CAUSED BY
AN INCORRECT USE OF THE PRODUCT.

WORKING CONDITIONS

Nominal Flow Rating / Displacement	45 l/min	12 U.S.G.P.M
Maximum Working Pressure	315 Bar	4600 PSI
Max Back Pressure	25 Bar	360 PSI
Oil Temperture with NBR Seals	-20 to 80 C°	-4 to 176 F °
with FPM (Viton) Seals	-20 to 100 C°	-4 to 212 F °
Oil Viscosity – Operating Range	From 10 to 75 mm2/s	From 10 to 75 cSt
Minumum / Maximum	10 / 400 mm2/s	10 / 400 cSt
Oil Filtration	≤30 µ	
Ambiant Temperture Range	-35 to 60 C°	-31 to 140 F °
Number Of Spools	1 to 3	
İnternal Leakage (at 100 bar (1450 PSI), 40C° (110 F°), 46 cSt – A(B)–T)	3 cm3/min	0,18 in3/min
Max. Level Of Contamination	19/16 - ISO 4406	

Not: This catalogue shows technical specifications measured with mineral oil of 46 mm2/s-46 cSt viscosity at 40 C° temparture.

Features

• Simple, compact and heavy duty designed sectional truck mounted valves from 1 to 3 sections for open center hydraulic systems.
• Interchangeable spool diametre is 16 mm – 0,63 in.
• It can be work working section and truck lift for some time.
• It has low tank pressure for additional tank line.
• It can be use single and double acting for only last working section.

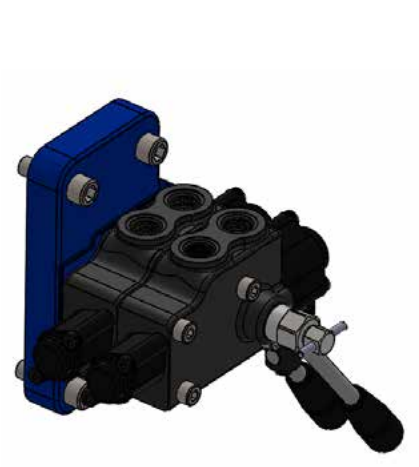



DIMENSIONAL DATA

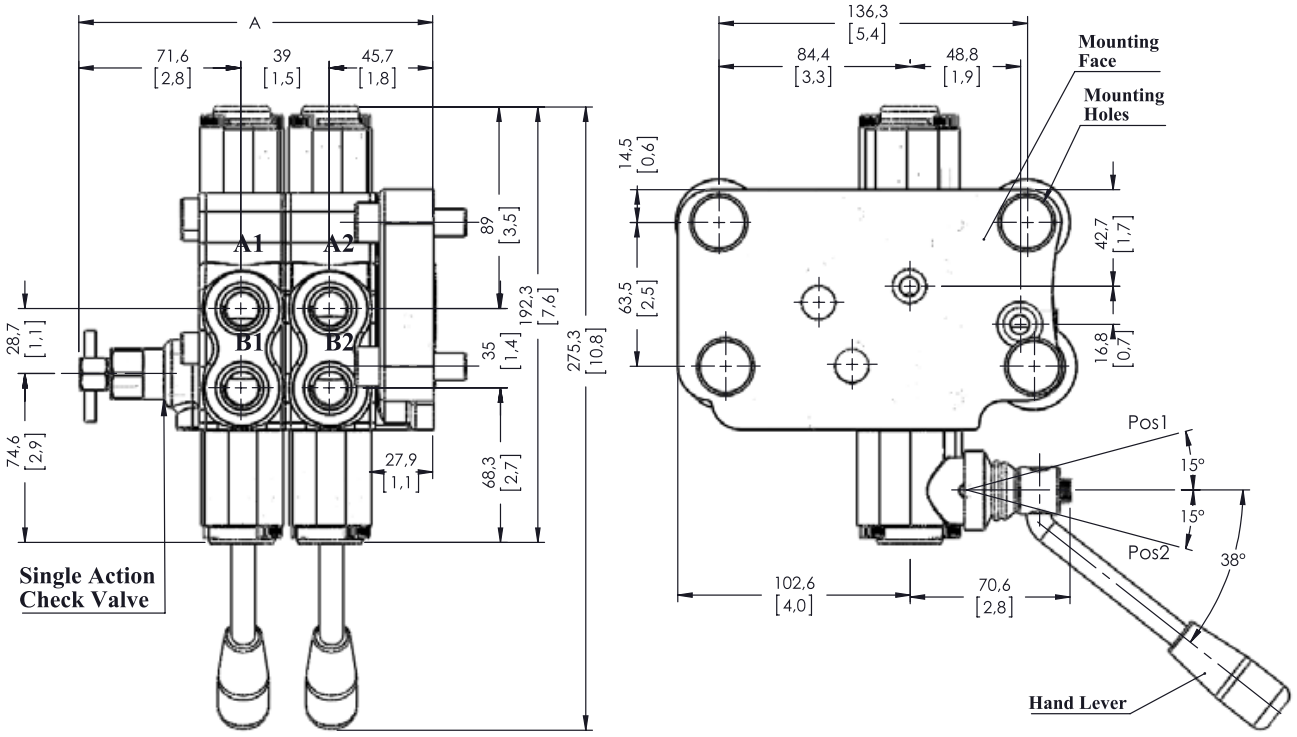

TYPE	A		WEIGHT	
	mm	in	Kg	lb
ORV-FRD 5-2	117,0	4,61	7,18	15,83
ORV-FRD 5-4	156,0	6,14	10,74	23,68
ORV-FRD 5-6	195,0	7,68	14,45	31,83

STANDARD THREADS

PORT	BSP (Iso 228)		UN-UNF (Iso 11926-1)	Metric (Iso 262)
	3/8" Series	½"Series		
P Inlet			Plate Mounted	
A-B Ports	G 3/8	G 1/2	9/16-18 UNF	M18x1.5
T Outlet			Plate Mounted	

Compatible Models

Ford (All Old Models)
5000 Series – 5000, 5600
6000 Series – 6000, 6600

HYDRAULIC CIRCUIT

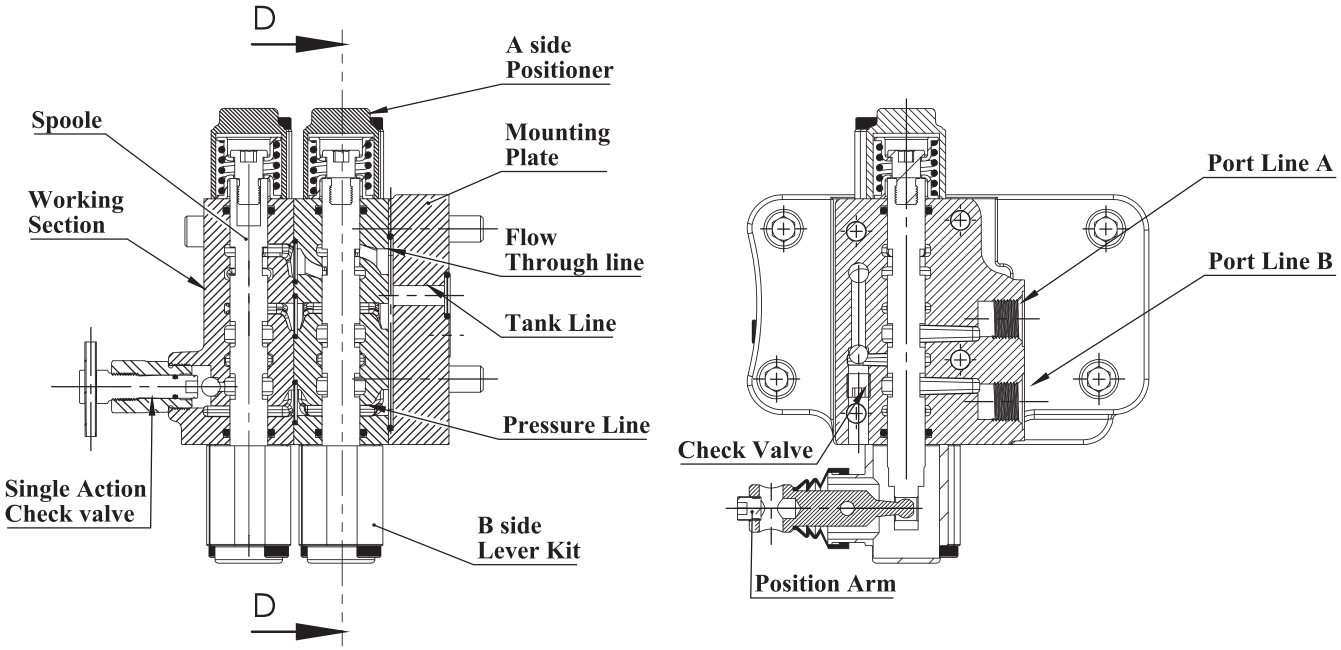

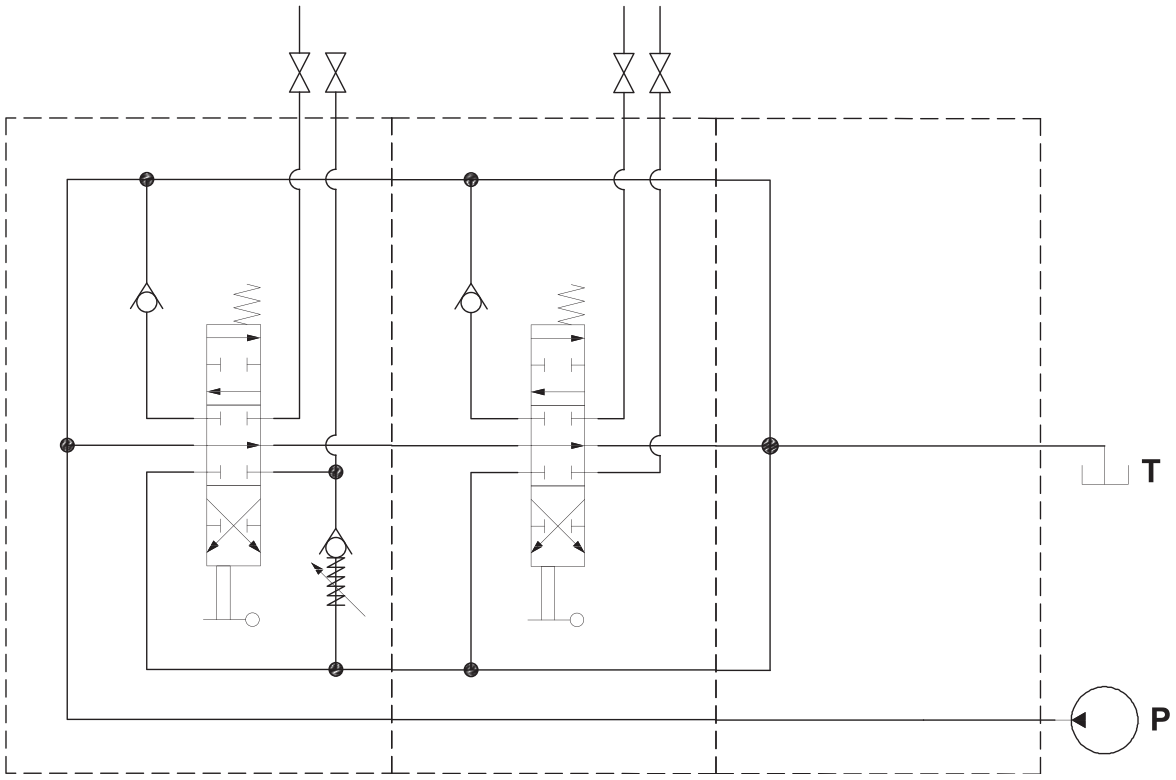

Order Code ORV – FRD 5 – 4

PERFORMANCE DATA AND CURVE

Open Center - Pressure Drop (P-T)

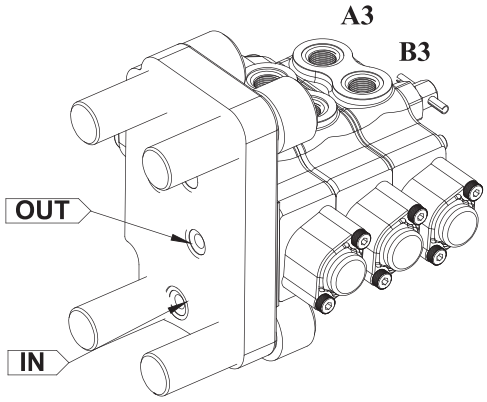

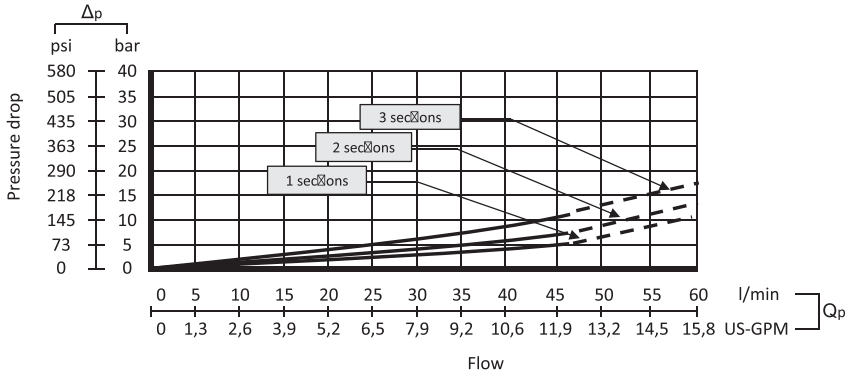

Inlet to Work Port - Pressure Drop (P-A/B)

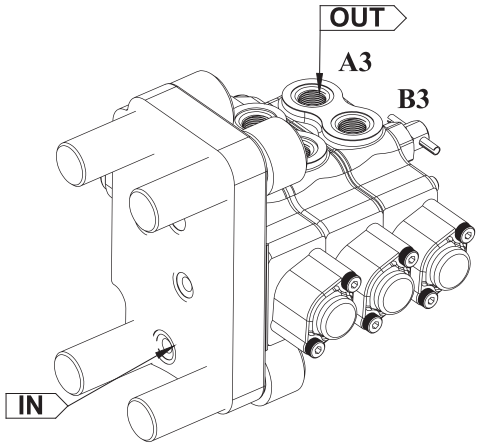

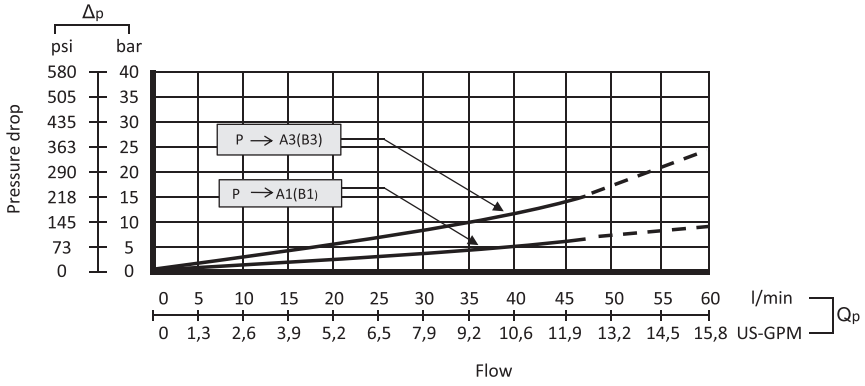

Work Port to Outlet - Pressure Drop (A/B-T)

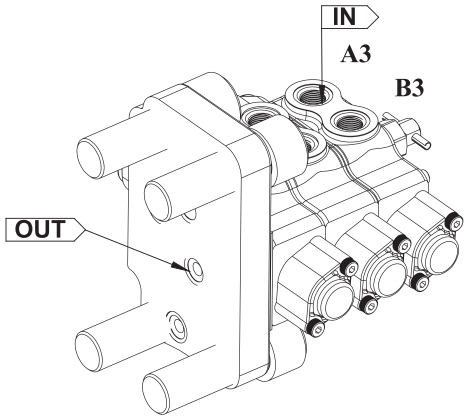

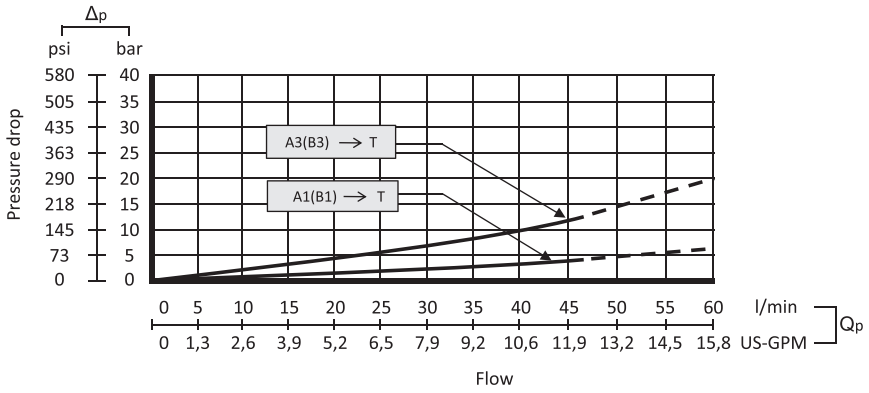

PORTS AND MOUNTING FACE

Port Directional And Type

Port Appearance

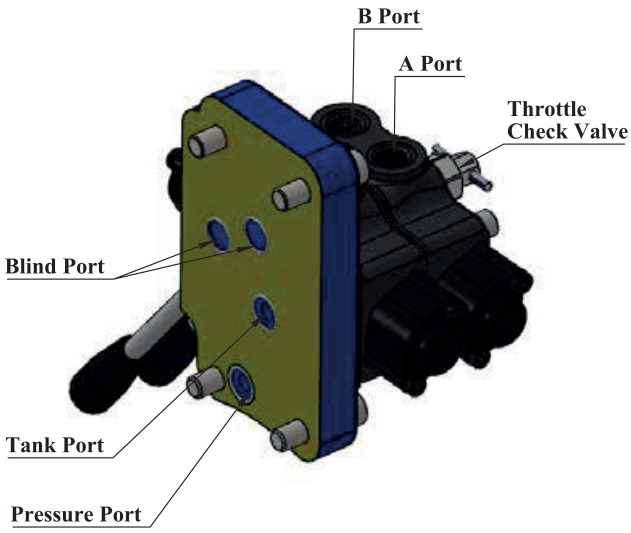

Diagram

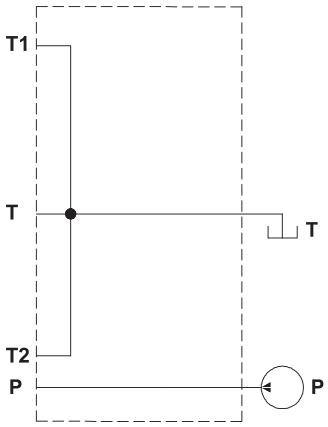

ORDERING CODES AND INSTALLATION

Order Code

ORV – FRD 5 - 4

- Output (2-4-6)
- Type (Ford 5000)
- Base Code "0"

FRD 5 - 2 (1 section - 2 Output)
FRD 5 - 4 (2 section - 4 Output)
FRD 5 - 6 (3 section - 6 Output)

Installation

The ORV FRD 5 valve is assembled and tested as per the technical specification of this catalog. Before the final installation on your equipment, follow the below recommendation:

• The valve can be assembled in any position, in order to prevent body deformation and spool sticking mount the product on a flat surface;

• In order to prevent the possibility of water entering the lever box and spool control kit, do not use high pressure wash down directly on the valve;

• Before painting, ensure plastic port plugs are tightly in place.

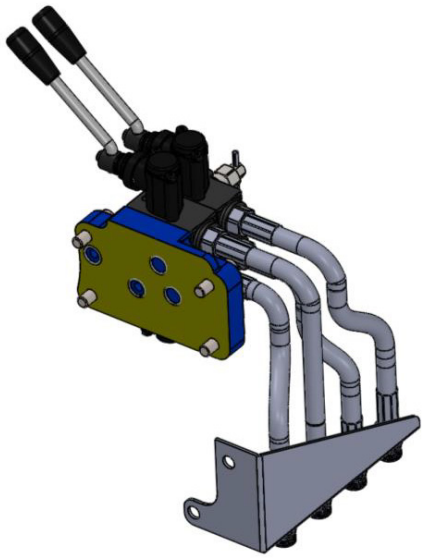

MODEL	HOSE	COPPER WASHER	SHEET CONNECTION	CONNECTION BOLT	LEVER COUNT
ORV - FRD 5-2	63 cm - 2 Pcs	2 pcs		UNC-7/16-1 1/2"-4 Pcs	1 pcs
ORV - FRD 5-4	63 cm - 4 Pcs	4 pcs		UNC-7/16-1 1/2"-4 Pcs	2 pcs
ORV - FRD 5-6	63 cm - 6 Pcs	6 pcs		UNC-7/16-1 1/2"-4 Pcs	3 pcs

ORVAL HYDRAULIC

SPECIAL TRACTOR
VALVES

ORV-FIAT

CE

TÜV International Certification
TÜV THÜRINGEN
CERT
AZAV
15 190 17185
TIC



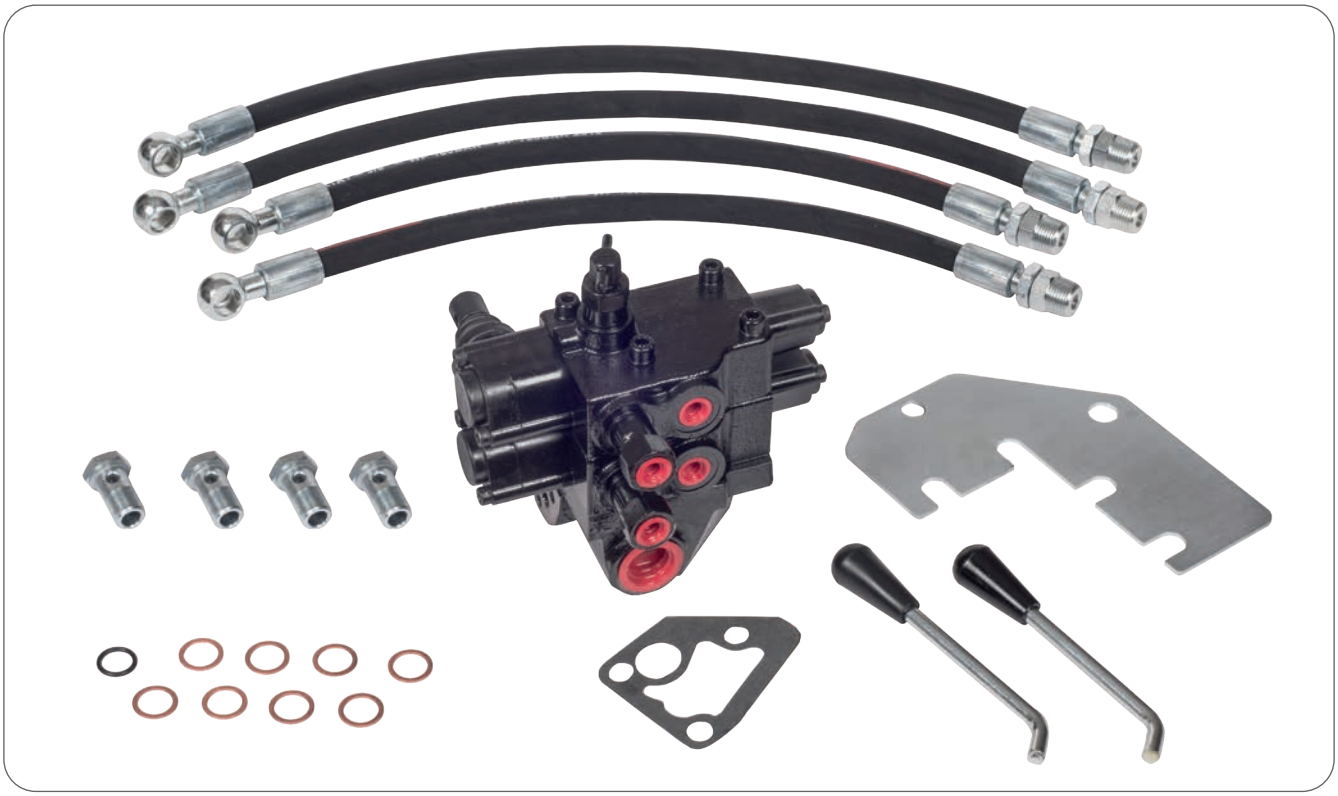

CONTENTS

Working Conditions	3
Dimensional Data	3
Hydraulic Circuit	3
Performance Data And Curve	3
Ports And Mounting Face	3
Ordering Codes And Installation	3

Additional Informations

Note: This catalog shows the product in the most standard configurations. For Other Configurations, more detailed information or special request, Please contact Customer Service Dpt.

Warning! :All specifications of this catalog refer to the standard product at this date (10/2019). ORVAL, oriented to a continuous improvement, reserves the right to discontinue, modify or revise the specifications, without notice.

ORVAL IS NOT RESPONSIBLE FOR ANY DAMAGE CAUSED BY
AN INCORRECT USE OF THE PRODUCT.

WORKING CONDITIONS

Nominal Flow Rating / Displacement	45 l/min	12 U.S.G.P.M
Maximum Working Pressure	315 Bar	4600 PSI
Max Back Pressure	25 Bar	360 PSI
Oil Temperture with NBR Seals	-20 to 80 C°	-4 to 176 F °
with FPM (Viton) Seals	-20 to 100 C°	-4 to 212 F °
Oil Viscosity – Operating Range	From 10 to 75 mm2/s	From 10 to 75 cSt
Minumum / Maximum	10 / 400 mm2/s	10 / 400 cSt
Oil Filtration	≤30 µ	
Ambiant Temperture Range	-35 to 60 C°	-31 to 140 F °
Number Of Spools	1 to 3	
İnternal Leakage (at 100 bar (1450 PSI), 40C° (110 F°), 46 cSt – A(B)—T)	3 cm3/min	0,18 in3/min
Max. Level Of Contamination	19/16 - ISO 4406	

Not: This catalogue shows technical specifications measured with mineral oil of 46 mm2/s-46 cSt viscosity at 40 C° temparture.

Features

• Simple, compact and heavy duty designed sectional truck mounted valves from 1 to 3 sections for open center hydraulic systems.
• Interchangeable spool diametre is 16 mm – 0,63 in.
• It can be work working section and truck lift for some time.
• It has low tank pressure for additional tank line.
• It can be use single and double acting for only last working section.

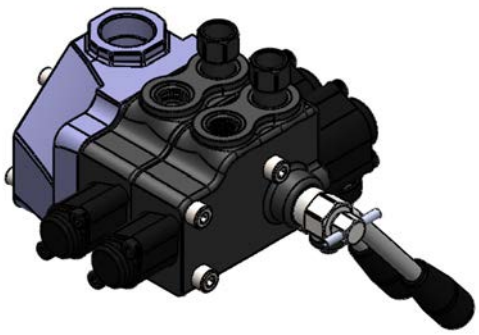

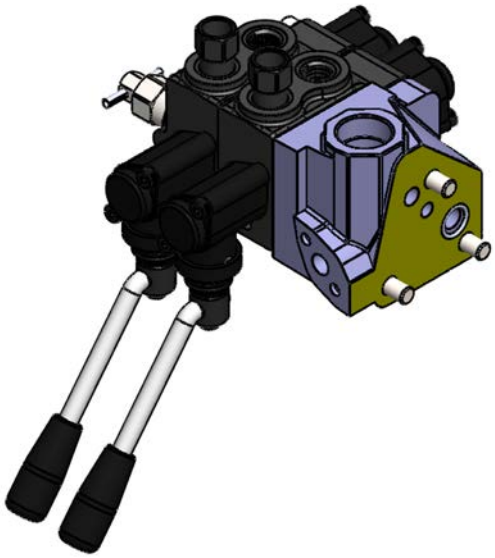

DIMENSIONAL DATA

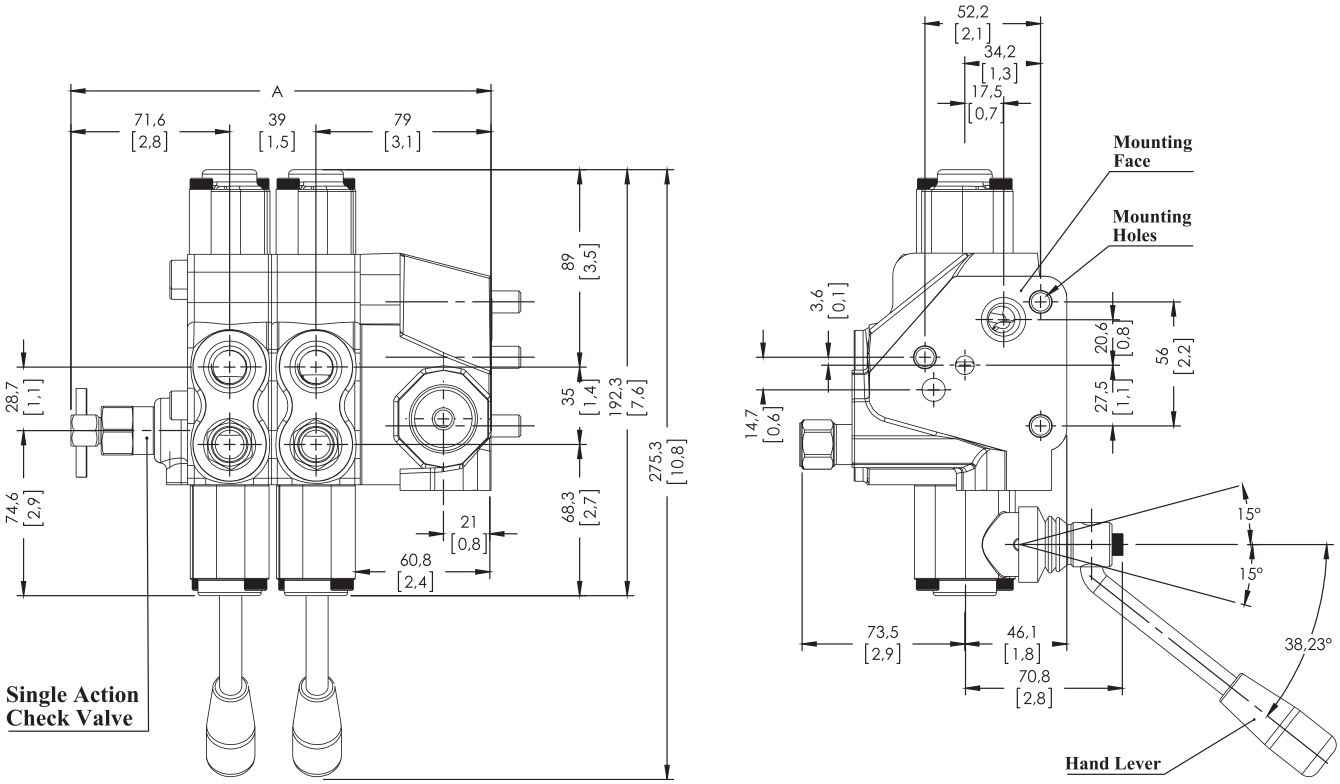

TYPE	A		WEIGHT	
	mm	in	Kg	lb
ORV-FT - 2	150,5	5,93	6,75	14,88
ORV-FT - 4	189,5	7,46	10,13	22,33
ORV-FT - 6	228,5	9,00	13,51	29,78

STANDARD THREADS

PORT	BSP (Iso 228)		UN-UNF (Iso 11926-1)	Metric (Iso 262)
	3/8" Series	½"Series		
P Inlet			Plate Mounted	
A-B Ports	G 3/8	G 1/2	9/16-18 UNF	M18x1.5
T Outlet			Plate Mounted	

Compatible Models

Fiat (All Old Models)
400 Series - 480
600 Series - 640

HYDRAULIC CIRCUIT

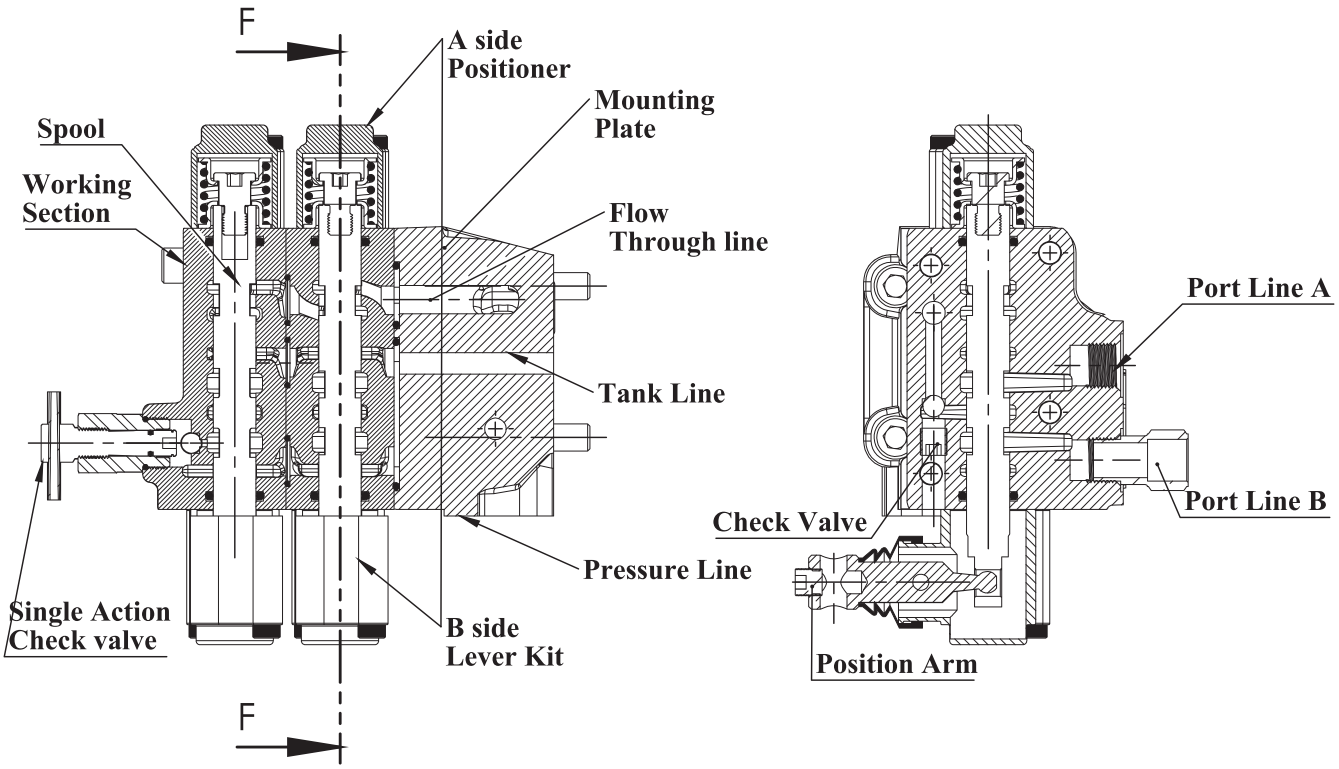

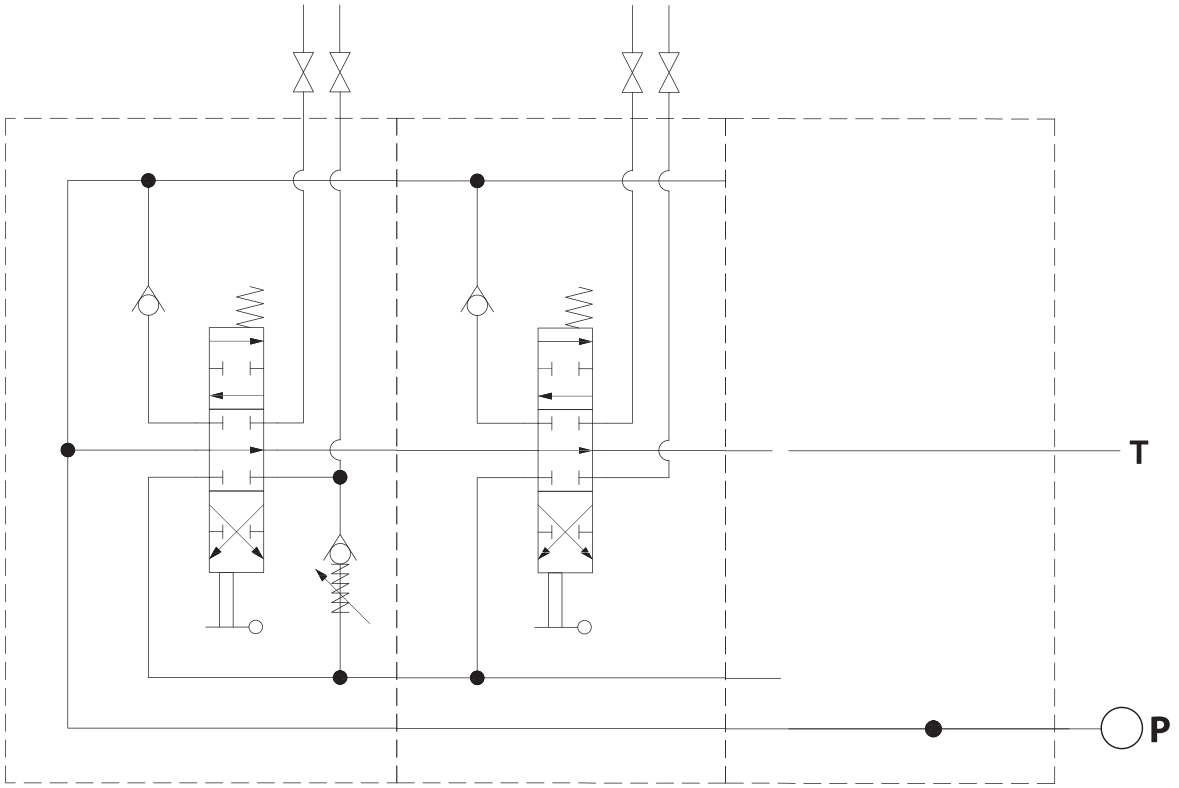

Order Code ORV – FT – 4

PERFORMANCE DATA AND CURVE

Open Center - Pressure Drop (P-T)

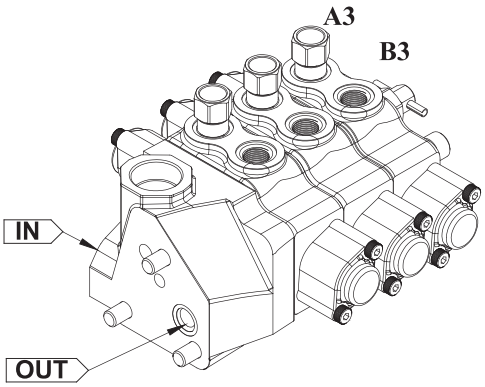

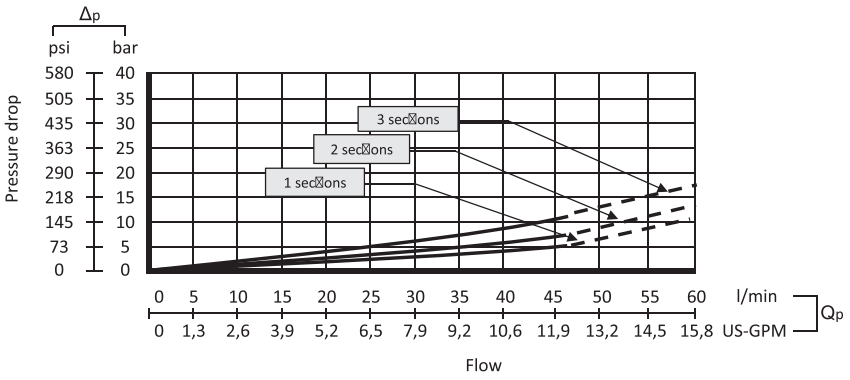

Inlet to Work Port - Pressure Drop (P-A/B)

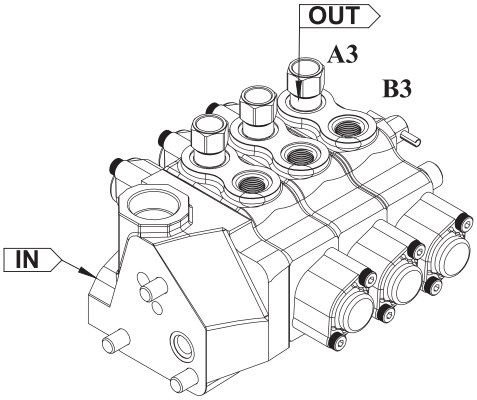

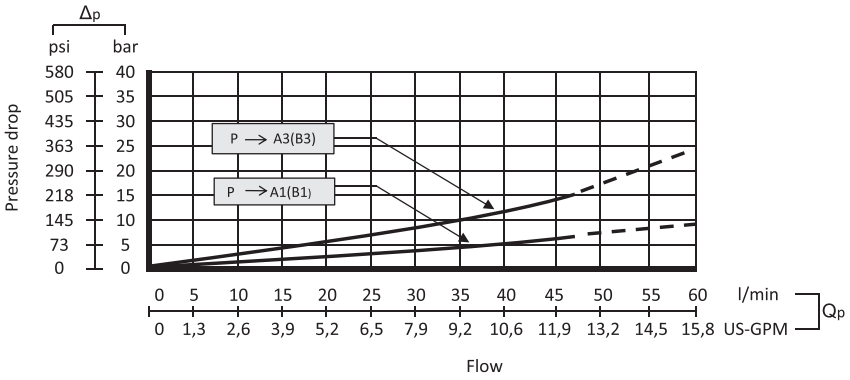

Work Port to Outlet - Pressure Drop (A/B-T)

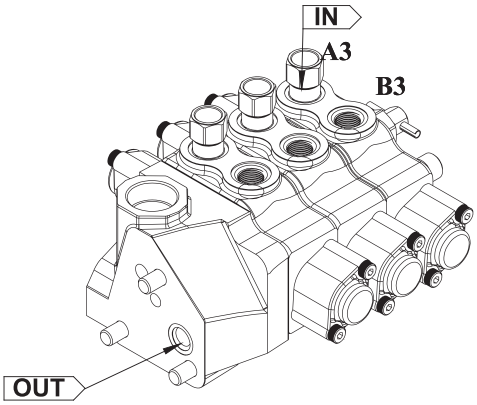

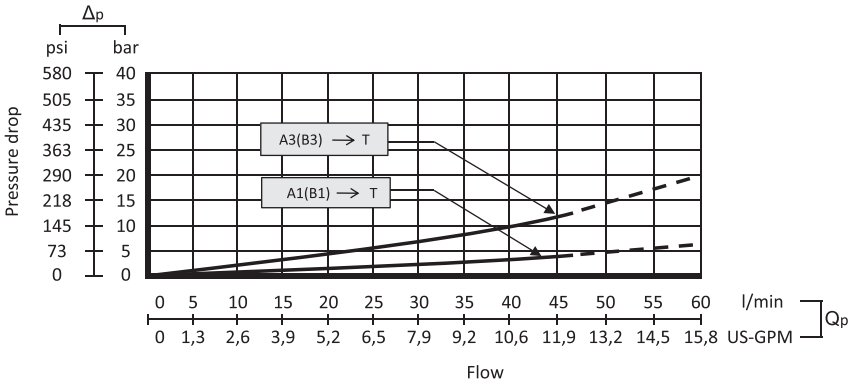

PORTS AND MOUNTING FACE

Port Directional And Type

Port Appearance

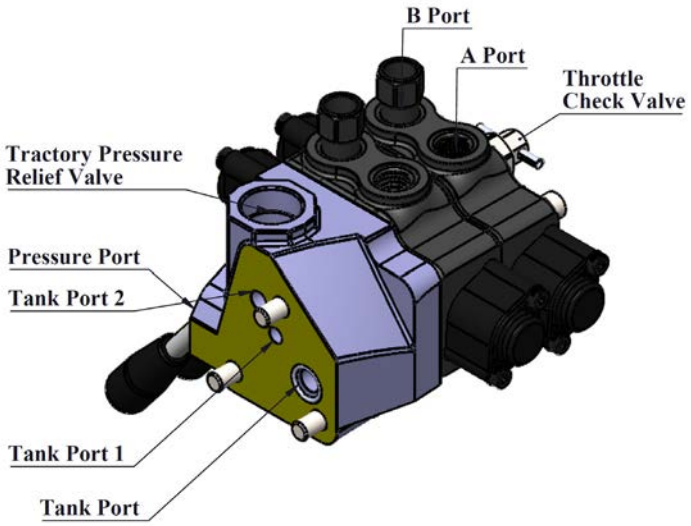

Diagram

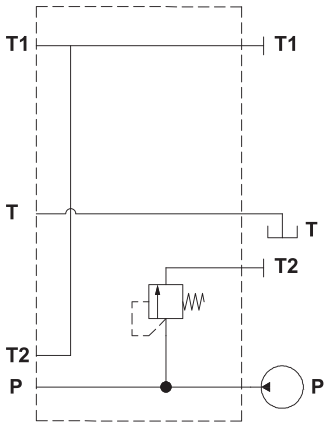

ORDERING CODES AND INSTALLATION

Order Code

ORV – FT - 4

- Output (2-4-6)
- Type (Fiat)
- Base Code "0"

FT-2 (1 section - 2 Output)
FT-4 (2 section - 4 Output)
FT-6 (3 section - 6 Output)

Installation

The ORV FT valve is assembled and tested as per the technical specification of this catalog. Before the final installation on your equipment, follow the below recommendation:

• The valve can be assembled in any position, in order to prevent body deformation and spool sticking mount the product on a flat surface;

• In order to prevent the possibility of water entering the lever box and spool control kit, do not use high pressure wash down directly on the valve;

• Before painting, ensure plastic port plugs are tightly in place.

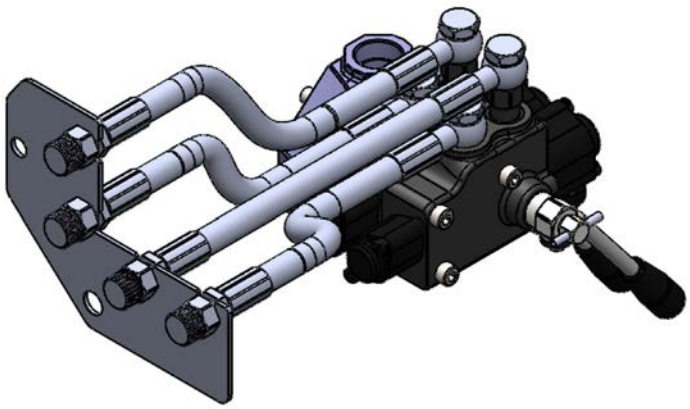

MODEL	HOSE	COUPLING HOLES 3/8"	COPPER WASHER	SHEET CONNECTION	CONNECTION BOLT	LEVER COUNT
ORV - FT-2	56 cm - 1 Pcs/ 45 cm - 1 Pcs	2 Pcs	3/8"-4 Pcs M18-1 Pcs		Gasket - 1 Pcs DIN 912 M10x1,25 - 45 - 3Pcs	1 pcs
ORV - FT-4	56 cm - 2 Pcs/ 45 cm - 2 Pcs	4 Pcs	3/8"-8 Pcs M18-1 Pcs		Gasket - 1 Pcs DIN 912 M10x1,25 - 45 - 3Pcs	2 pcs
ORV - FT-6	56 cm - 3 Pcs/ 45 cm - 3 Pcs	6 Pcs	3/8"-12 Pcs M18-1 Pcs		Gasket - 1 Pcs DIN 912 M10x1,25 - 45 - 3Pcs	3 pcs

ORVAL HYDRAULIC

SELENOID DIRECTIONAL CONTROL VALVES

ORV-4WE6

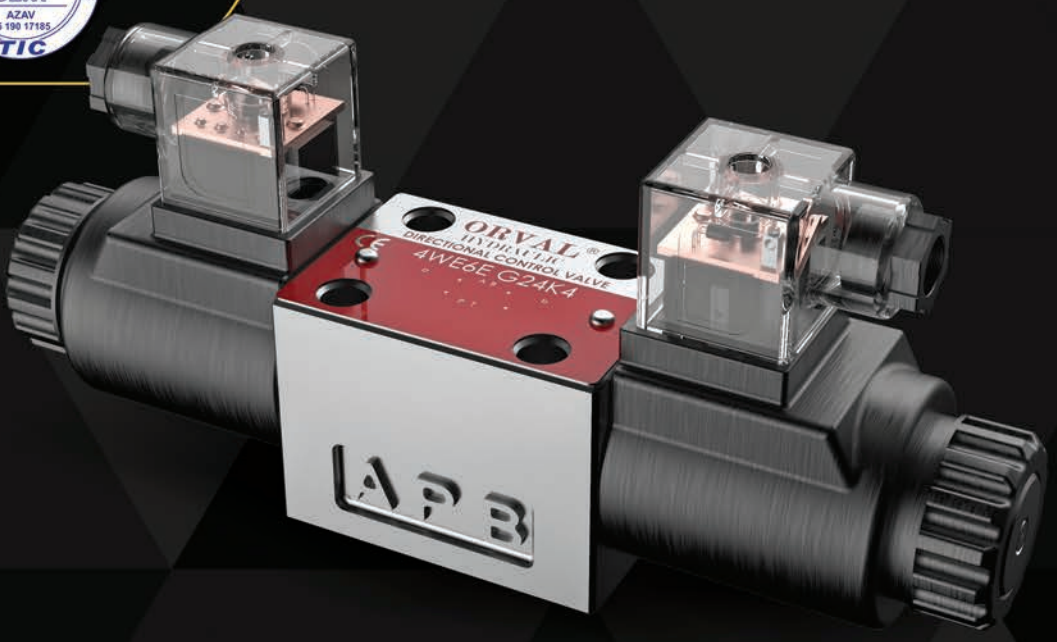



CONTENTS

Working Conditions	3
Dimensional Data	3
Spoole Types and Performance Curve	3
Ordering Codes	3
Electromagnetic Coil and Connection	3
Technical Data	3

Additional Informations

Note: This catalog shows the product in the most standard configurations. For Other Configurations, more detailed information or special request, Please contact Customer Service Dpt.

Warning!: All specifications of this catalog refer to the standard product at this date (12/2019) . ORVAL, oriented to a continuous improvement, reserves the right to discontinue, modify or revise the specifications, without notice.

ORVAL IS NOT RESPONSIBLE FOR ANY DAMAGE CAUSED BY
AN INCORRECT USE OF THE PRODUCT.

WORKING CONDITIONS

Nominal Flow Rating / Displacement	80 l/min	21 U.S.G.P.M
Maximum Working Pressure	315 Bar	4600 PSI
Max. Back Pressure	160 Bar	2300 PSI
Hydraulic Oil	ISO VG 32,46,68	
Oil Temperature with NBR Seals	-15 to 70 C°	-4 to 176 F °
with FPM (Viton) Seals	-20 to 100 C°	-4 to 212 F °
Oil Viscosity – Operating Range	From 10 to 75 mm2/s	From 10 to 75 cSt
Minumum / Maximum	10 / 400 mm2/s	10 / 400 cSt
Oil Filtration	≤30 µ NAS Class 9 Max	
Ambiant Temperature Range	-15 to 60 C°	-31 to 140 F °
Degree of protection to DIN 40050 And IEP	IP 65	
Max voltage variation	±10	
Power consumption	32 W	
Internal Leakage (at 100 bar (1450 PSI), 40C° (110 F°), 46 cSt – A(B)—T)	2 cm3/min	0,12 in3/min
Max. Level Of Contamination	19/16 - ISO 4406	
Mounting Pattern	ISO 4401 - 03	
Weight Single Selenoid / Double Selenoid	1,56 Kg/3,44 lb	2,05 Kg/4,52 lb

Not: This catalogue shows technical specifications measured with mineral oil of 46 mm2/s-46 cSt viscosity at 40 C° temparture.

Features

• The 4WE6 valve consists of a high strength iron castings body, a control spool with two centering springs and operating solenoid coils.
• 4/3, 4/2 and 3/2 way directional control
• Two position valves consist of one coil and spring, three position valves utilise two coils and two springs.
• Solenoid coils are 12 & 24VDC, and 110V & 220VAC Coils which have built in rectifiers.
• Wet – pin core tubes and connectors with LED's.
• Service life 10 milion cycle.
• Connections to DIN, ISO and CETOP.
• Optimize spoole design to reduce flow force.

Cross Section

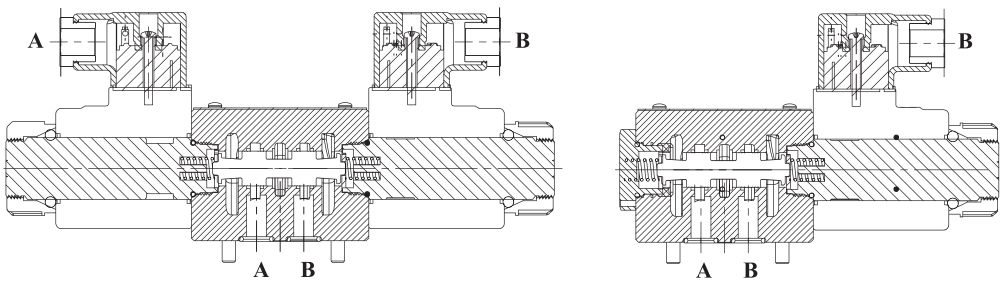

DIMENSIONAL DATA

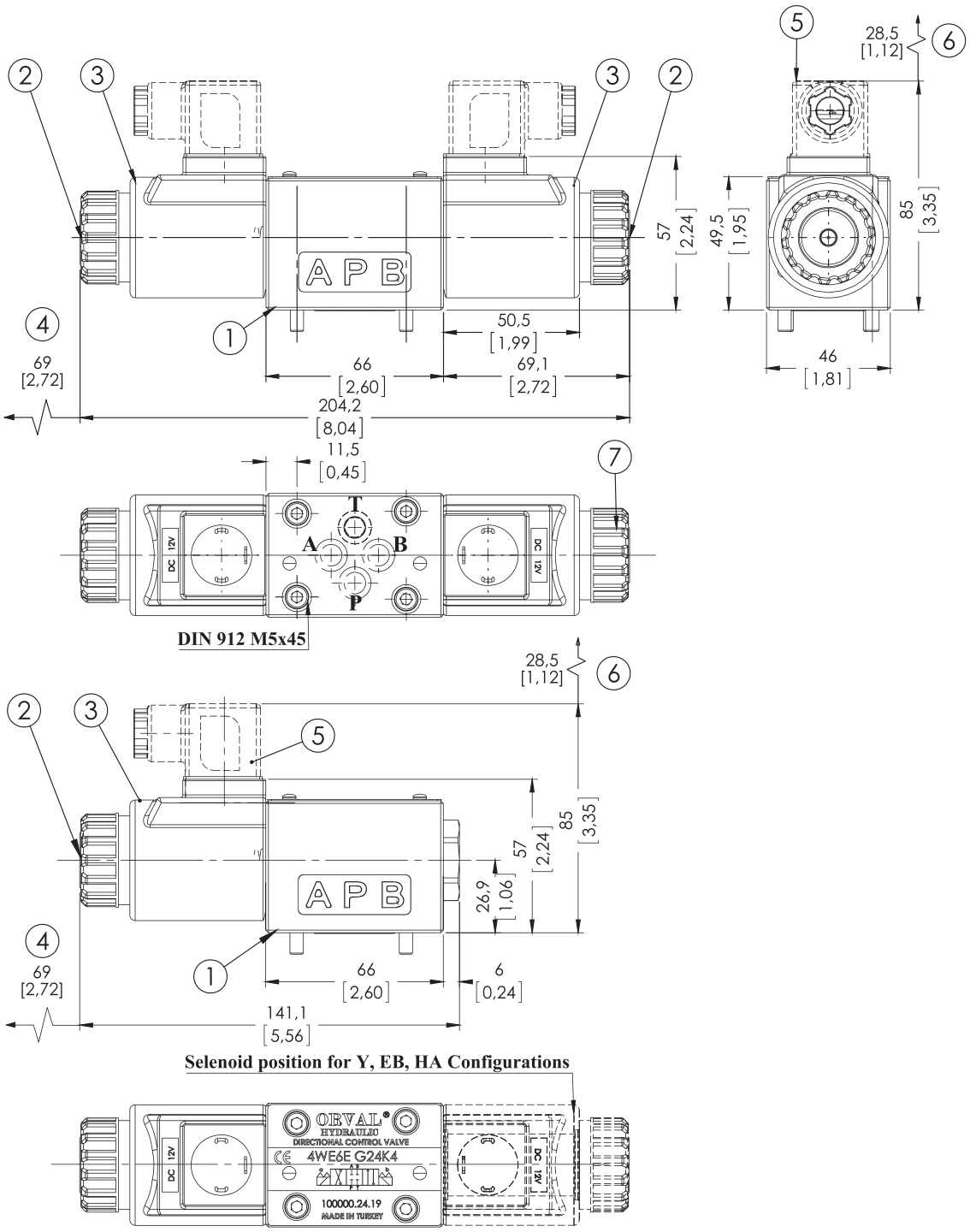

1	Mounting surface with sealing rings: 4x(9,25x1,78) – 90 Schore
2	Standart Manuel override included in the selenoid tube
3	Coil (360® revolving)
4	Coil removal space
5	EN 175301-803 connector to be ordered separatel.
6	Connector removal space
7	Locking ring: tightening torque 5 ± 0,5 Nm - (Valve Fastening =DIN 912 M5x45 mm)

SPOOL TYPES AND PERFORMANCE CURVE

Spool Center Types

Code	Hydraulic Circuit	Description	Code	Hydraulic Circuit	Description
E	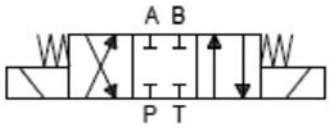	Double Action 3 position P-A-B-T Closed	Y	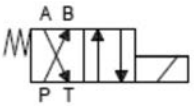	Single Action 2 position P→B flow and A→T flow tank
G	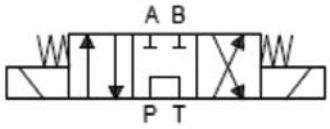	Double Action 3 position P→T flow tank and A-B Closed	C	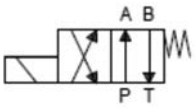	Single Action 2 position P→A flow and B→T flow tank
H	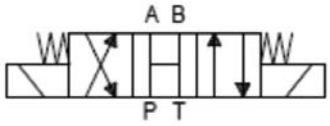	Double Action 3 position P-A-B-T Flow Tank	EA	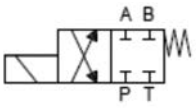	Single Action 2 position P-A-B-T closed and other position P→B flow and A→T flow tank
J	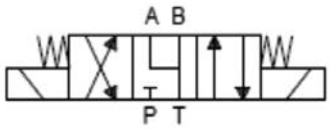	Double Action 3 position P Closed A-B→T Flow Tank	EB	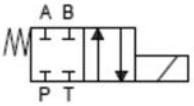	Single Action 2 position P-A-B-T closed and other position P→A flow and B→T flow tank
			HA	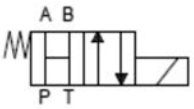	Single Action 2 position P-A-B-T flow tank and other position P→A flow and B→T flow tank
			HB		Single Action 2 position P-A-B-T flow tank and other position P→B flow and A→T flow tank

Performance Curve

Spool	P-A	P-B	A-T	B-T	P-T
E	2	2	3	3	-
G	5	5	5	6	3
H	2	2	2	2	3
J	2	2	2	2	-
Y	2	2	3	3	-
EA	-	2	3	-	-
EB	2	2	3	3	-
HB	-	2	3	-	-
HA	2	2	2	2	3

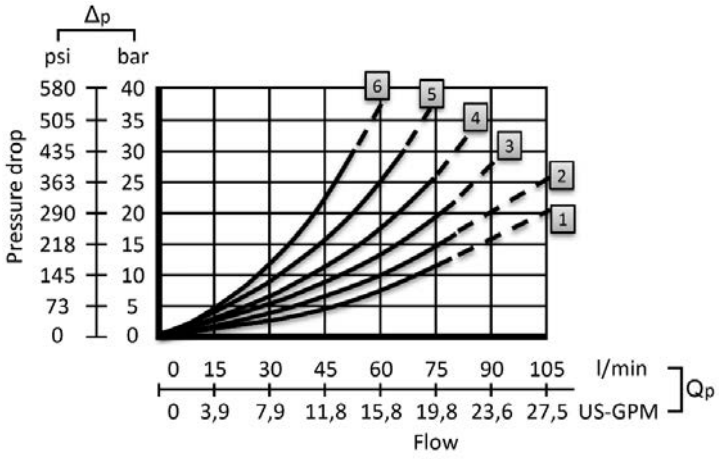

ORDERING CODES

Order Example

ORV	4	-	WE	-	6	-	E	-	G24	-	K4
1	2		3		4		5		6		7

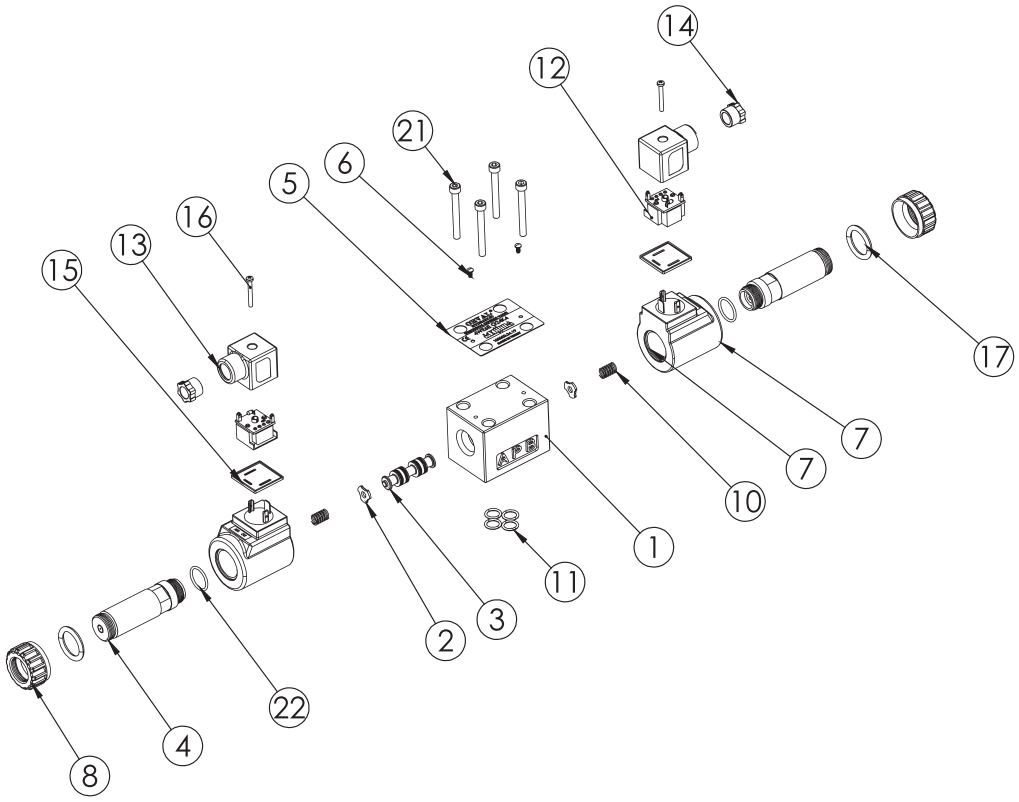

1 – Base Code =ORV
2 – Type =4 Port (3 Port)
3 - Design =WE
4 – Size =6 NG6 / CETOP 3
5 – Spool Type =E/G/H/J /Y/C/EA/EB/HA/HB
6 – Coil Voltage =G12/G24/A110/A220
7 – Coil Electric Connection =K4

Item No	Order Code	Part Name	Description	Quantity
1	16060000	Body	NG 6	1
2	940135	Washer	Stamp for rounded	2
3	82NG6E	Spool	Close Center	1
4	450011	Coil Core		2
5	940014	Label	NG6	1
6	950000	Label Rivet	2,9x5,5	2
7	450011	Coil	NG 6	2
8	450011	Rubber Nut		2
9	9506009	Slot Pim	7X27	4
10	940132	Spring	NG 6	2
11	9507069	O-RİNG	8,73x1,78	4
12	450021	Coil electiric Base		2
13	450021	Coil Socket Cap		2
14	450021	Cable Cap		2
15	450021	Socket Up Seal		2
16	450021	ISO 7045	M3 x 25 - Z2	2
17	450011	O-RİNG	22x3	2
21	9501057-S	DIN 912	M5 x 45 --- 22N	4
22	450011	O-RİNG	17,17x1,78	2

ELECTROMAGNETIC COIL AND CONNECTION

Current Limits

The tests have beem carried out with solenoids at operating temperature and a voltage 10 % less than rated with a fluid temperature of 40 C. The fluid used was a mineral oil with a viscosity of 46 mm2/s at 40 C. The values in the diagram refers to test carried out with the oil flow in two directions simultaneously T=2 bar (e.g.. from P to A and the same B to T). In the case where valves 4/2 and 4/3 were used with the flow in one direction only, limits of use could have variations which may even be negative. Rest times: the volues are indicative and depend on following parameters: hydraulic circuit, fluid used and variations in hydraulics scales (pressure P, flow Q, tempereture T). The limit of use for AC solenoids were detected with 50 Hz power.

Direct Current: Energizing 60 – 90 ms, De-Energizing 25 – 70 ms,

Alternatif Current: Energizing 12 – 30 ms. De- Energizing 10 – 55 ms.

Features of Electro-magnetic Coil

Selenoid Classification	Power Source	Voltage V	Frequency (Hz)	Inrush Current (A)	Holding Current (A)	Holding Power (W)	Permissible Voltage (%)	Insulation Grade	Coil Insulation Class	Insulation Resistance
AC	A1	110	50	1,6	0,47	23	+10,-15	B	H (180 C)	> 50
	A2	220	50	0,8	0,24	23	+10,-15			
DC	D1	12	-	-	-	29	+10,-15			
		24	-	-	-	28	+10,-15			

Electrical Connection, assingment

Electrical connections and coil combinations

Ordering Code connector	Top view	Circuit diagram	Pin	Connections, assingment
Connector, 3 pole (2+PE) according to DIN EN 175301-803 (IP65) K4 - Code	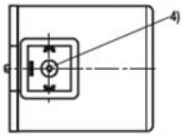		1	Selenoid coil, polarity - independent
			2	
				Connection for protective grounding conductor

TECHNICAL DATA

Mounting Interface

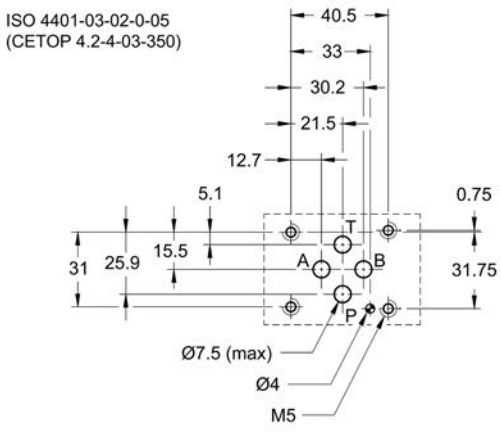

Necessary Surface Quality

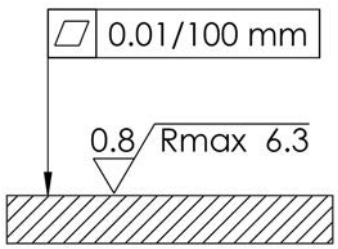

ORVAL HYDRAULIC

ORV 4WE6

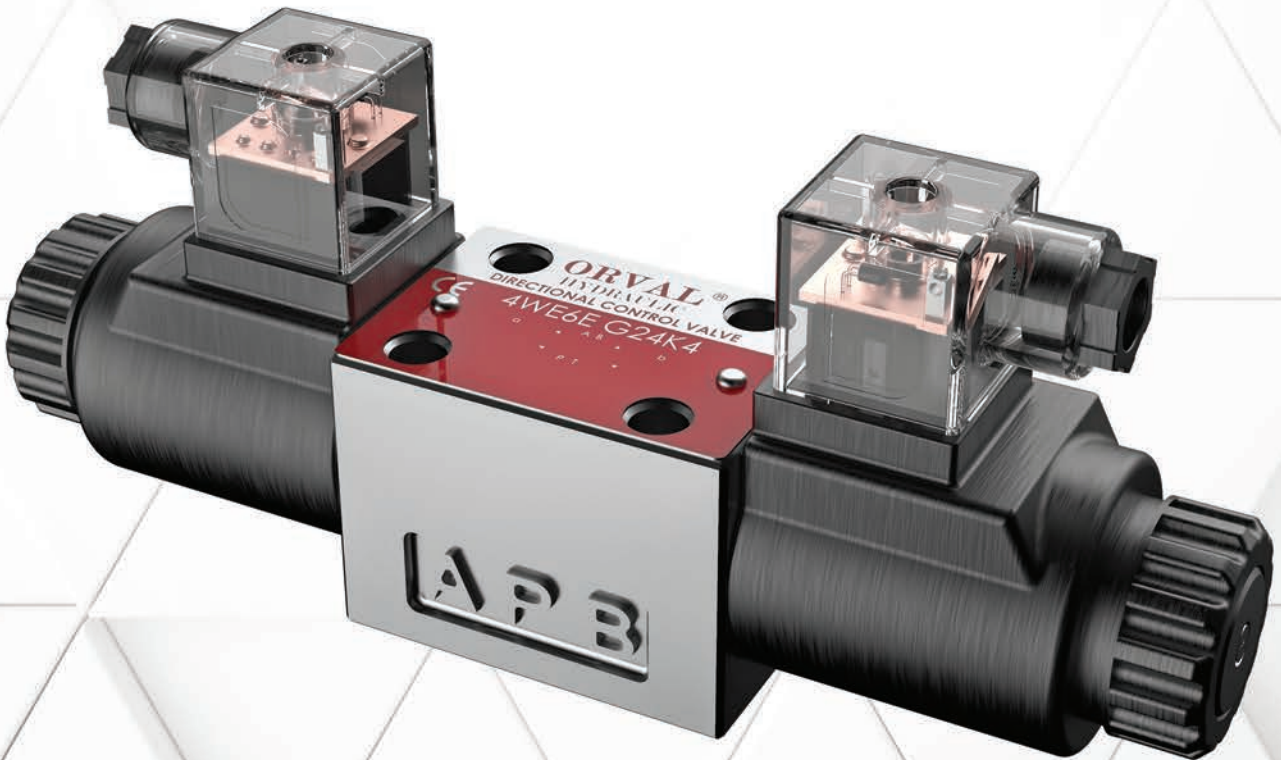

ORVAL HYDRAULIC

SELENOID DIRECTIONAL CONTROL VALVES

ORV-4WE10

CE

TÜV International Certification
TÜV THÜRINGEN CERT AZAV 15 190 17185 TIC

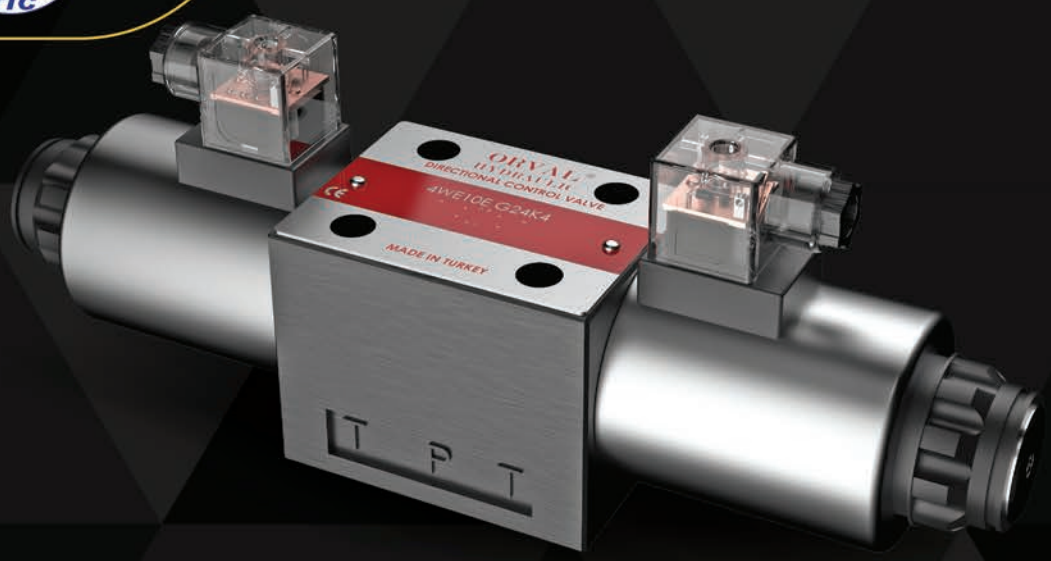



CONTENTS

Working Conditions	3
Dimensional Data	3
Spoole Types and Performance Curve	3
Ordering Codes	3
Electromagnetic Coil and Connection	3
Technical Data	3

Additional Informations

Note: This catalog shows the product in the most standard configurations. For Other Configurations, more detailed information or special request, Please contact Customer Service Dpt.

Warning!: All specifications of this catalog refer to the standard product at this date (12/2019) . ORVAL, oriented to a continuous improvement, reserves the right to discontinue, modify or revise the specifications, without notice.

ORVAL IS NOT RESPONSIBLE FOR ANY DAMAGE CAUSED BY
AN INCORRECT USE OF THE PRODUCT.

WORKING CONDITIONS

Nominal Flow Rating Displacement	AC Voltage	120 l/min	31 U.S.G.P.M
	DC Voltage	150 l/min	38 U.S.G.P.M
Maximum Working Pressure		315 Bar	4600 PSI
Max. Back Pressure		160 Bar	2300 PSI
Hydraulic Oil		ISO VG 32,46,68	
Oil Temperature with NBR Seals		-15 to 70 C°	-4 to 176 F °
with FPM (Viton) Seals		-20 to 100 C°	-4 to 212 F °
Oil Viscosity – Operating Range		From 10 to 75 mm2/s	From 10 to 75 cSt
Minumum / Maximum		10 / 400 mm2/s	10 / 400 cSt
Oil Filtration		≤30 µ NAS Class 9 Max	
Ambiant Temperature Range		-15 to 60 C°	-31 to 140 F °
Degree of protection to DIN 40050 And IEP		IP 65	
Max voltage variation		±10	
Power consumption		32 W	
Internal Leakage (at 100 bar (1450 PSI), 40C° (110 F°), 46 cSt – A(B)–T)		2 cm3/min	0,12 in3/min
Max. Level Of Contamination		19/16 - ISO 4406	
Mounting Pattern		ISO 4401 - 03	
Weight Single Selenoid / Double Selenoid		4,64 Kg /10,23 lb	6,14 Kg/13,53 lb

Not: This catalogue shows technical specifications measured with mineral oil of 46 mm2/s-46 cSt viscosity at 40 C° temparture.

Features

- The 4WE10 valve consists of a high strength iron castings body, a control spool with two centering springs and operating solenoid coils.
- 4/3, 4/2 and 3/2 way directional control
- Two position valves consist of one coil and spring, three position valves utilise two coils and two springs.
- Solenoid coils are 12 & 24VDC, and 110V & 220VAC Coils which have built in rectifiers.
- Wet – pin core tubes and connectors with LED's.
- Service life 10 milion cycle.
- Connections to DIN, ISO and CETOP.
- Optimize spoole design to reduce flow force.

Cross Section

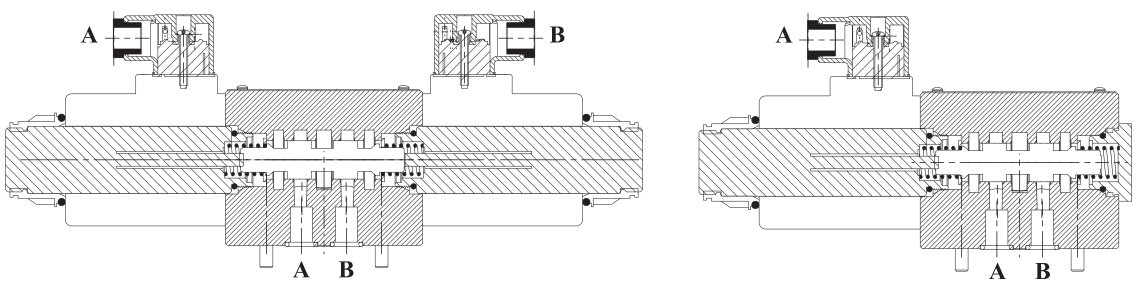

DIMENSIONAL DATA

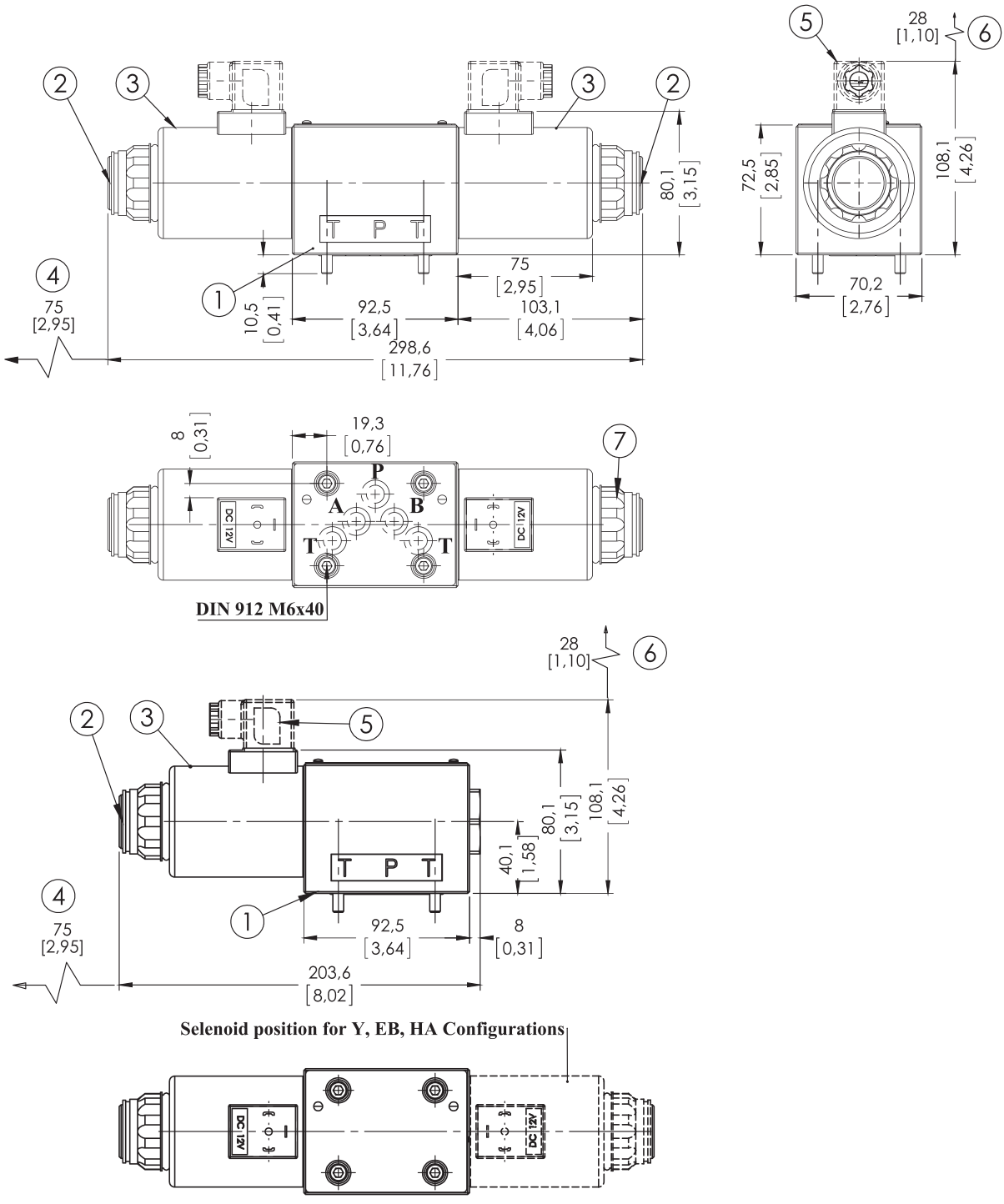

1	Mounting surface with sealing rings: 4x(12x2) – 90 Shore
2	Standart Manuel override included in the selenoid tube
3	Coil (360® revolving)
4	Coil removal space
5	EN 175301-803 connector to be ordered separatel.
6	Connector removal space
7	Locking ring: tightening torque 8 ± 0,5 Nm - (Valve Fastening =DIN 912 M6x40 mm)

SPOOLE TYPES AND PERFORMANCE CURVE

Spoole Center Types

Code	Hydraulic Circuit	Description	Code	Hydraulic Circuit	Description
E	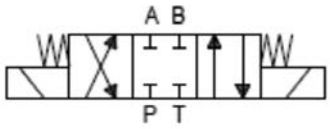	Double Action 3 position P-A-B-T Closed	Y	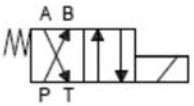	Single Action 2 position P→B flow and A→T flow tank
G	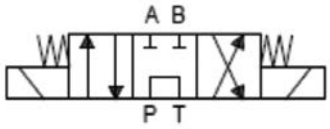	Double Action 3 position P→T flow tank and A-B Closed	C	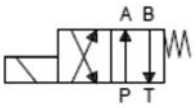	Single Action 2 position P→A flow and B→T flow tank
H	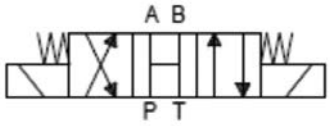	Double Action 3 position P-A-B-T Flow Tank	EA	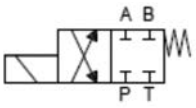	Single Action 2 position P-A-B-T closed and other position P→B flow and A→T flow tank
J	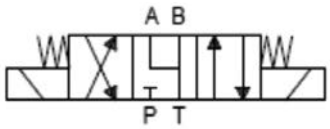	Double Action 3 position P Closed A-B→T Flow Tank	EB	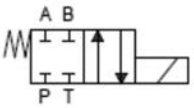	Single Action 2 position P-A-B-T closed and other position P→A flow and B→T flow tank
			HA	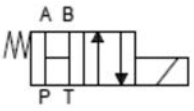	Single Action 2 position P-A-B-T flow tank and other position P→A flow and B→T flow tank
			HB		Single Action 2 position P-A-B-T flow tank and other position P→B flow and A→T flow tank

Performance Curve

Spool	P-A	P-B	A-T	B-T	P-T
E	2	2	3	3	-
G	5	5	5	6	3
H	2	2	2	2	3
J	2	2	2	2	-
Y	2	2	3	3	-
EA	-	2	3	-	-
EB	2	2	3	3	-
HB	-	2	3	-	-
HA	2	2	2	2	3

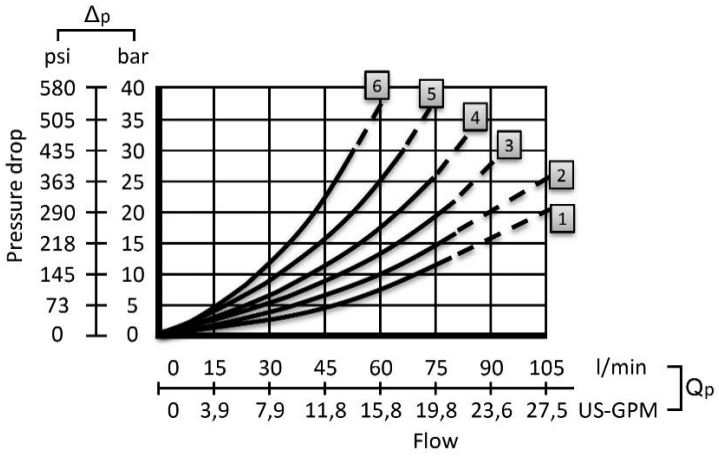

ORDERING CODES

Order Example

ORV	4	-	WE	-	10	-	E	-	G24	-	K4
1	2		3		4		5		6		7

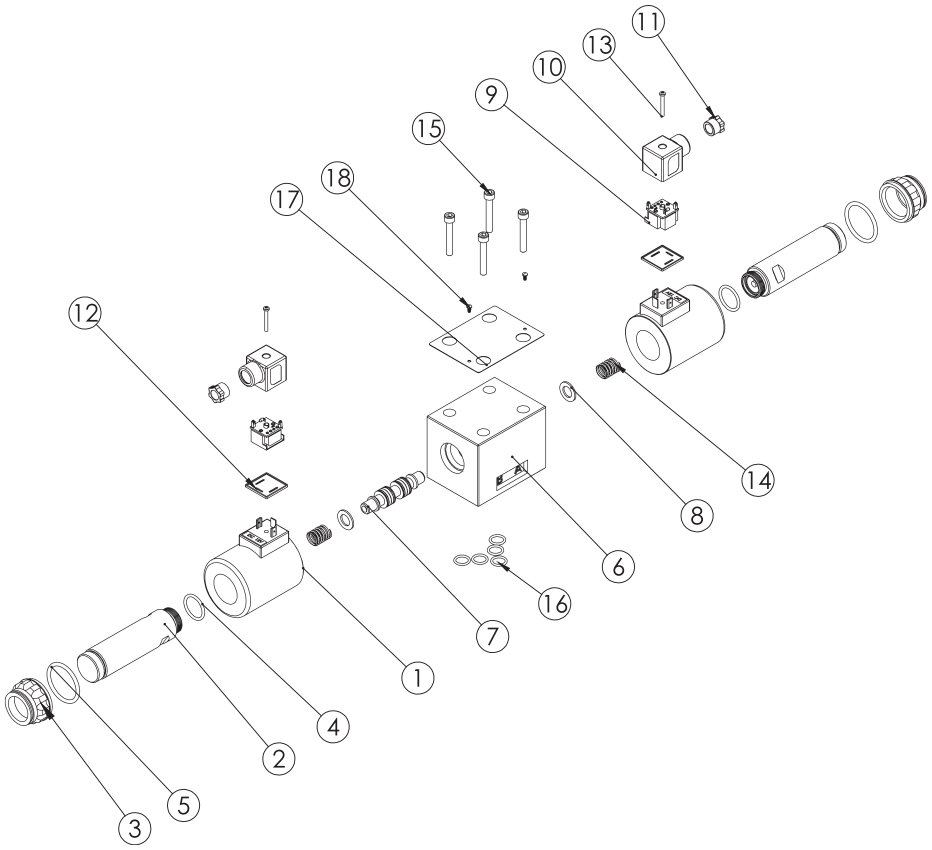

1 – Base Code =ORV
2 – Type =4 Port (3 Port)
3 - Design =WE
4 – Size =10 NG10 / CETOP 5
5 – Spool Type =E/G/H/J /Y/C/EA/EB/HA/HB
6 – Coil Voltage =G12/G24/A110/A220
7 – Coil Electric Connection =K4

Item No	Order Code	Part Name	Description	Quantity
1	4500015	Coil	NG10	2
2	4500015	Coil Core		2
3	4500015	Rubber Nut		2
4	4500015	O-ring	22,22x2,62	2
5	4500015	O-ring	36x3,5	2
6	16100000	Body	NG 10	1
7	82NG10E	Spoole	(Close Center)	1
8	940138	Washer	Stamp for rounded	2
9	450021	Coil electiric Base		2
10	450021	Coil Socket Cap		2
11	450021	Cable Cap		2
12	450021	Socket Up Seal		2
13	450021	ISO 7045	M3 x 25 - Z --- 25N	2
14	940136	Spring		2
15	9501063-S	DIN	912M6 x 40 --- 24N	4
16	9507031-1	O-RİNG	12x2	5
17	9500015	Label	NG 10	1
18	950000	Label Rivet	2,9x5,5	2

ELECTROMAGNETIC COIL AND CONNECTION

Current Limits

The tests have beem carried out with solenoids at operating temperature and a voltage 10 % less than rated with a fluid temperature of 40 C. The fluid used was a mineral oil with a viscosity of 46 mm2/s at 40 C. The values in the diagram refers to test carried out with the oil flow in two directions simultaneously T=2 bar (e.g.. from P to A and the same B to T). İn the case where valves 4/2 and 4/3 were used with the flow in one direction only, limits of use could have variations which may even be negative. Rest times: the volues are indicative and depend on following parameters: hydraulic circuit, fluid used and variations in hydraulics scales (pressure P, flow Q, tempereture T). The limit of use for AC solenoids were detected with 50 Hz power.

Direct Current: Energizing 30 – 50 ms, De-Energizing 10 – 30 ms,

Alternatif Current: Energizing 8 – 30 ms. De- Energizing 15 – 55 ms.

Features of Electro-magnetic Coil

Selenoid Classification	Power Source	Voltage V	Frequency (Hz)	Inrush Current (A)	Holding Current (A)	Holding Power (W)	Permissible Voltage (%)	Insulation Grade	Coil Insulation Class	Insulation Resistance
AC	A1	110	50	6,2	0,63		+10,-15	B	H (180 C)	> 50
	A2	220	50	3,1	0,32		+10,-15			
DC	D1	12	-	-	3,17	38	+10,-15			
	D2	24	-	-	1,58	38	+10,-15			

Electrical Connection, assigment

Electrical connections and coil combinations

Ordering Code connector	Top view	Circuit diagram	Pin	Connections, assigment
Connector, 3 pole (2+PE) according to DIN EN 175301-803 (IP65) K4 - Code	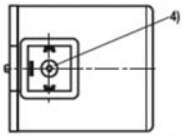		1 2	Selenoid coil, polarity - independent
				Connection for protective grounding conductor

TECHNICAL DATA

Mounting Interface

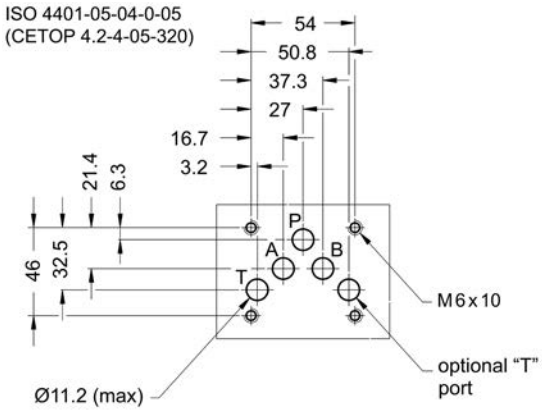

Necessary Surface Quality

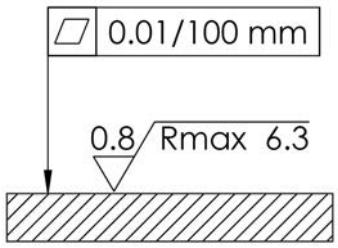

ORVAL HYDRAULIC

ORV 4WE10

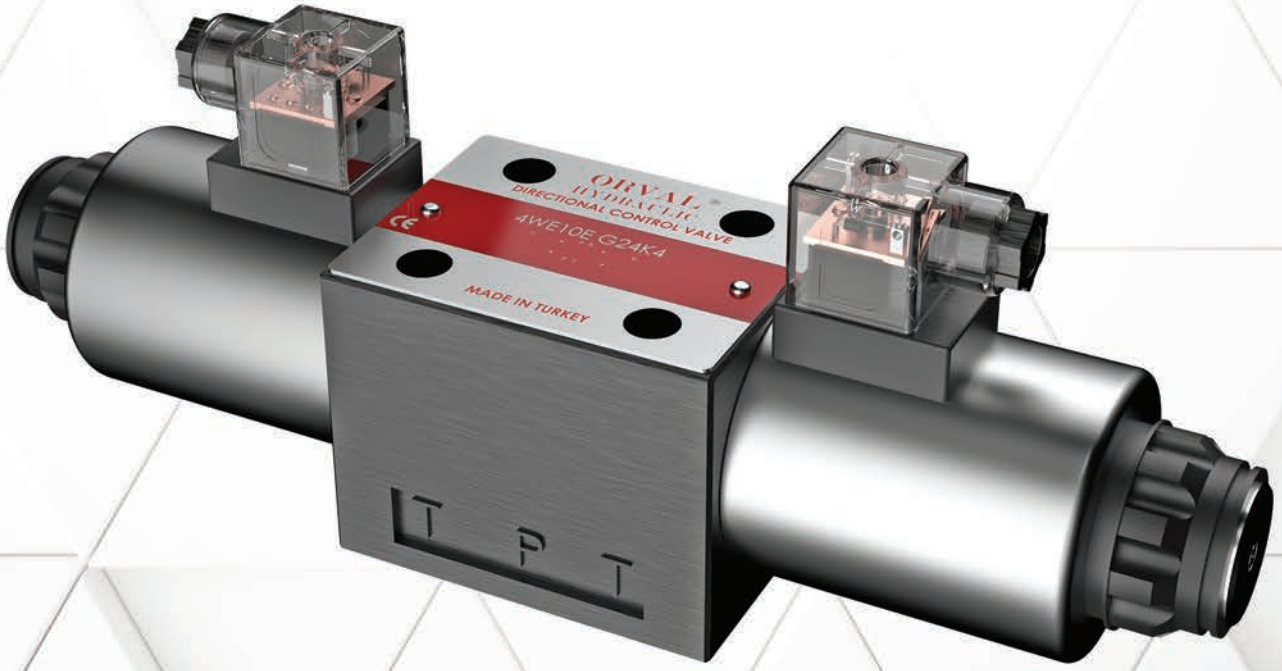

ORVAL HYDRAULIC

TIPPER VALVE

ORV-KMV

CE

TÜV International Certification
TÜV THÜRINGEN
CERT
AZAV
15 190 17185
TIC

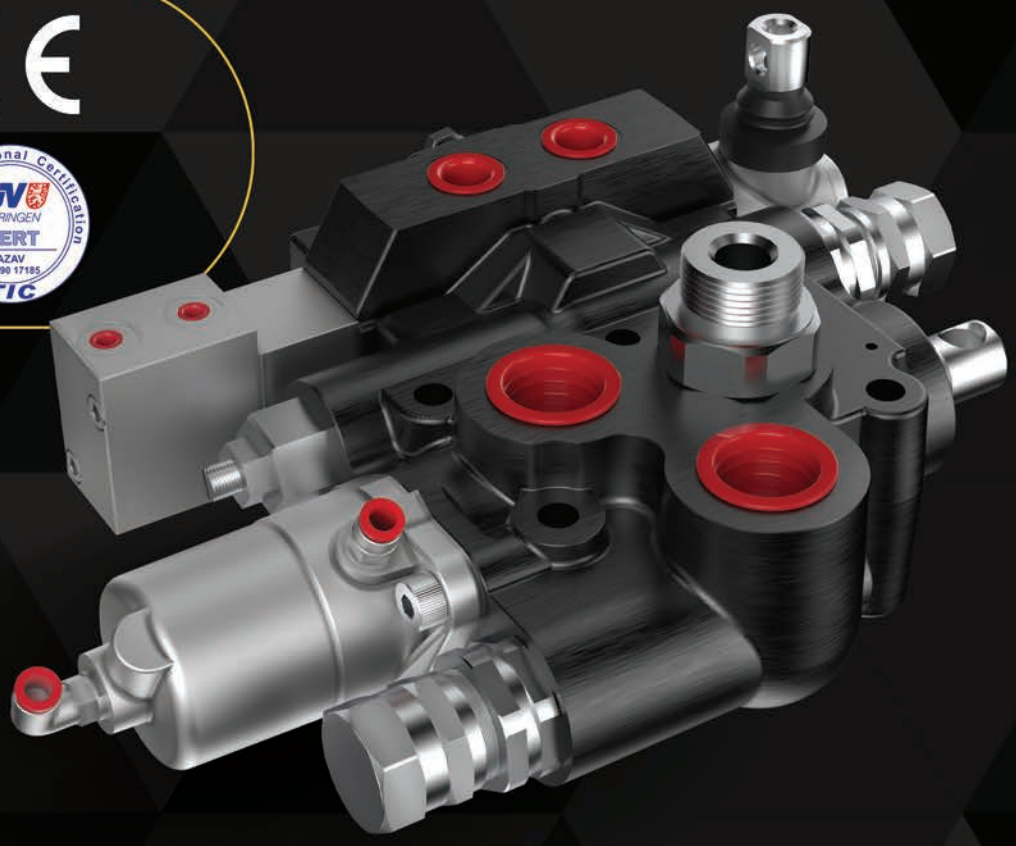

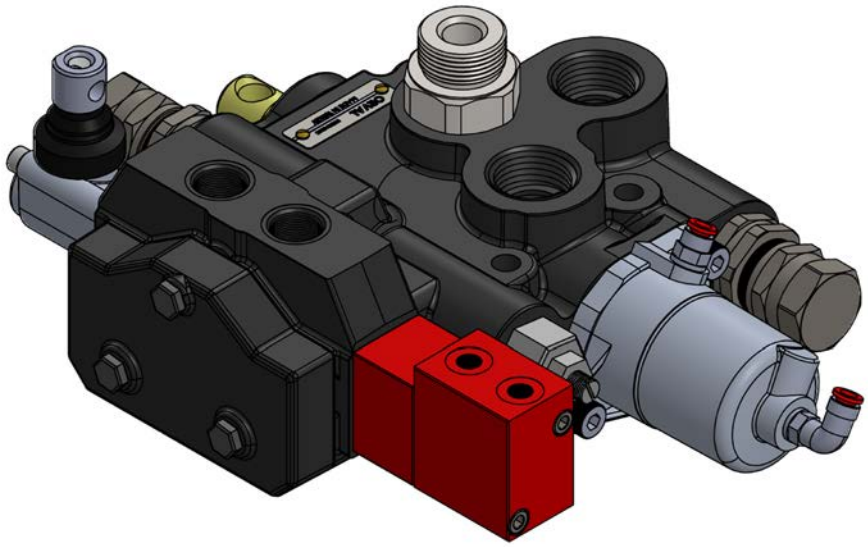

CONTENTS

Working Conditions	3
Dimensional Data and Pressure Drop	3
Hydraulic Circuit	3
Ordering Codes	3
Part List	3

Additional Informations

Note: This catalog shows the product in the most standard configurations. For Other Configurations, more detailed information or special request, Please contact Customer Service Dpt.

Warning!: All specifications of this catalog refer to the standard product at this date (10/2018). ORVAL, oriented to a continuous improvement, reserves the right to discontinue, modify or revise the specifications, without notice.

ORVAL IS NOT RESPONSIBLE FOR ANY DAMAGE CAUSED BY
AN INCORRECT USE OF THE PRODUCT.

WORKING CONDITIONS

MODEL	ORV-4B
Nominal Flow Displacement Main Auxiliary Section	150 l/dk 38 USGPM 60 l/dk 15 USGPM
- Pilot Pressure	6-12 Bar 90-180 PSI
- Tank Pressure	30 Bar 450 PSI
Maximum Operating Pressure	250 Bar - 4600 PSI
Maximum Peak Pressure	300 Bar - 4400 PSI
Weight	21,1 Kg – 7,05 lbs
Oil Temperature with NBR Seals	-20 to 80 C° (-4 to 176 F°)
Oil Viscosity – Operating Range Minumum / Maximum	From 10 to 75 mm2/s - 10 / 400 mm2/s From 10 to 75 cSt - 10 / 400 cSt
Oil Filtration	≤30 µ
Ambiant Temperature Range	-35 to 80 C° (-31 to 140 F°)
Internal Leakage at 100 bar (1450 PSI), 40C° (110 F°), 46 cSt – A(B)–T)	3 cm3/min 0,18 in3/min
Max. Level Of Contamination	19/16 - ISO 4406

Not: This catalogue shows technical specifications measured with mineral oil of 46 mm2/s-46 cSt viscosity at 40 C° temparture.

PORT	ORV-KMV
P Pressure Port	G 1" (G 3/4)
S Cylinder Port	G 1" (G 3/4)
T Tank Port	G 1" (G 3/4)
X-Y Pneumatic	G 1/8" (Ø6)
A-B Ports	G 1/2"
X1-Y1 Pneumatic	G 1/8" (Ø6)

DIMENSIONAL DATA AND PRESSURE DROP

Dimensional Data

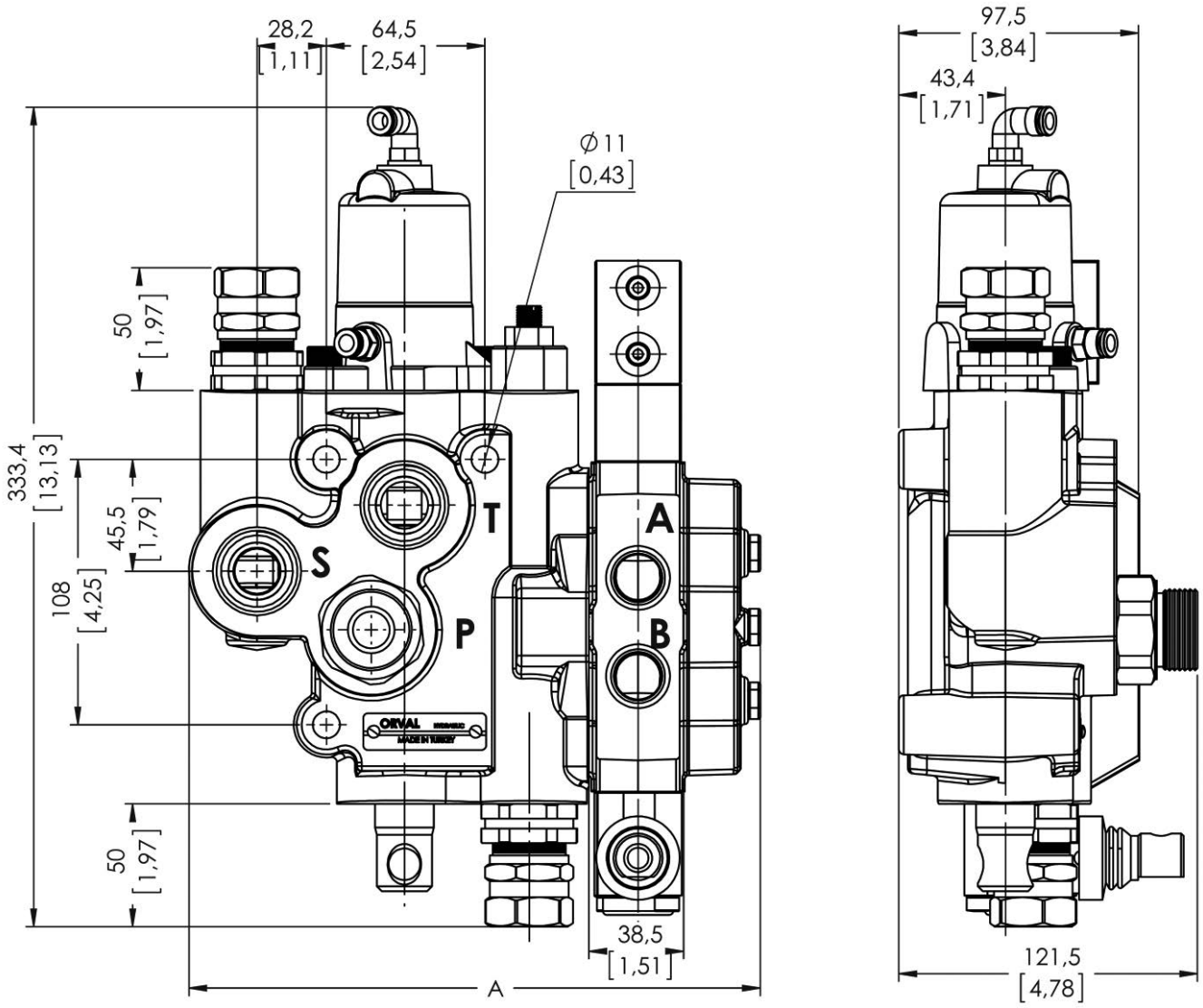

Pressure Drop (ΔP) - Pressure Range

Pressure Range Options		
Order Code	**Product Code**	**Range - Settings**
KMR1-200	KMR180200	Range 140-250 Bar Setting 140 Bar

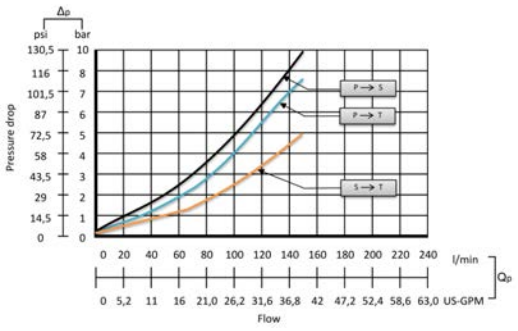

HYDRAULIC CIRCUIT

Port Direction and Type

Port Apperance

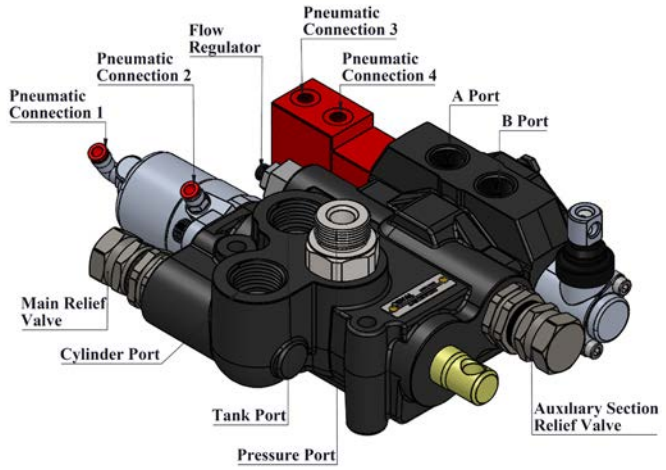

Diagram

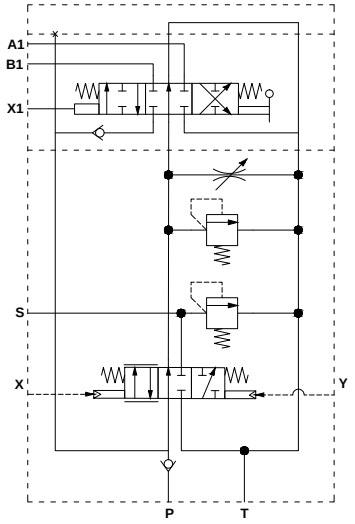

ORDERING CODES

Order Example

ORV KMV - 1P

- Base Code "0"
- Type
- Sections (Max 3 Sections)

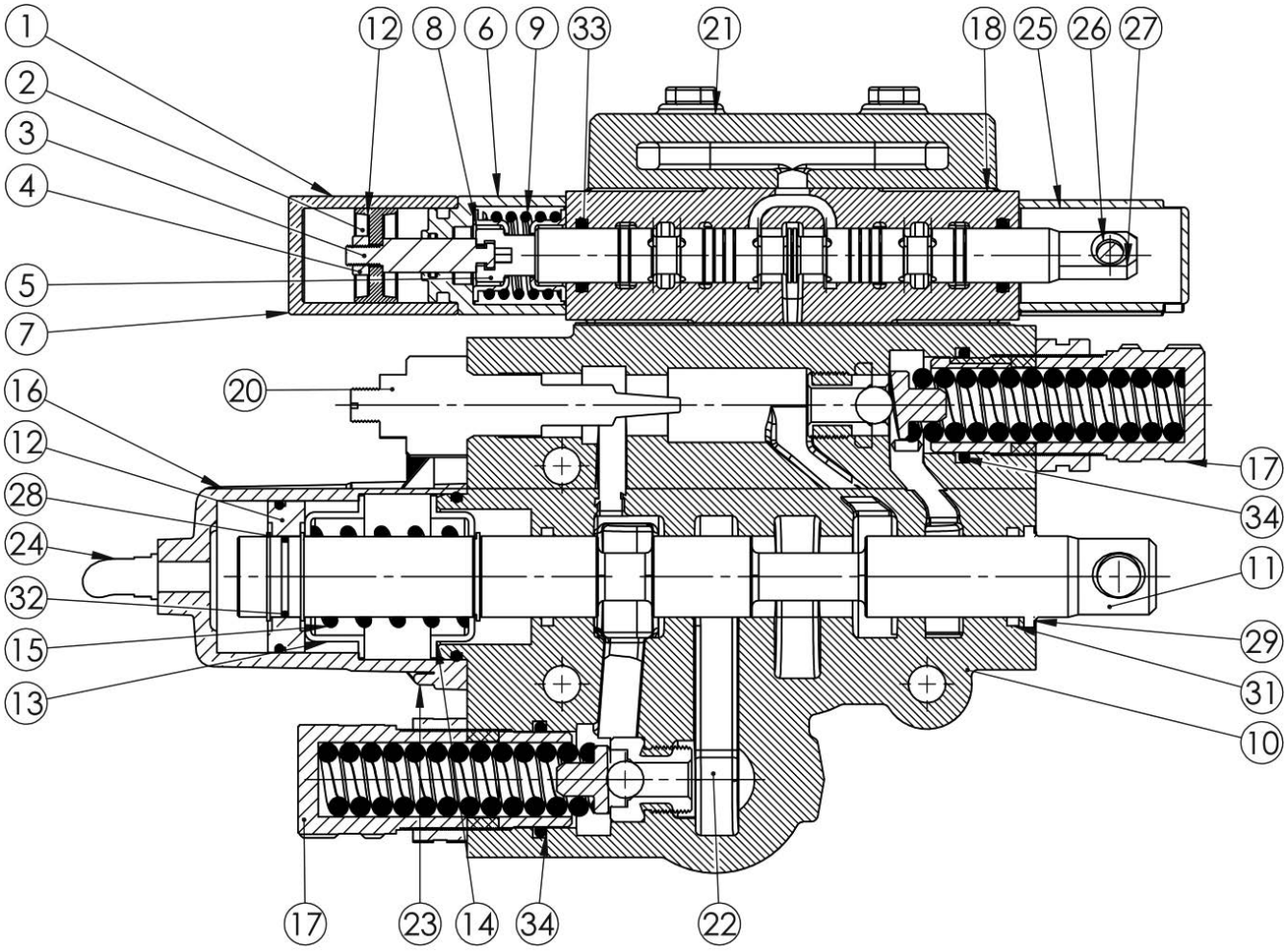

PART LIST

ITEM NO	ORDER CODE	PART NAME	DESCRIPTION	QUANTITY
1	963002	45 LT Pneumatic Rear Cap		1
2	9508012	45 LT Pneumatic Seal		1
3	963006	45 LT Pneumatic Pin		1
4	9504003	45 LT Pneumatic Nut	M6	1
5	942007	45 LT Pneumatic Forehead Screw		1
6	963001	45 LT Pneumatic Front Cap		1
7	9501008	45 Pneumatic Imbus		2
8	940102	45 LT Cup		2
9	940112	45 LT Cup Spring		1
10	1530KMV40	Truck Tipping Base		1
11	829901	Truck Tipping Spoole		1
12	941018	Pneumatic Piston		1
13	940107	Thick Cup		1
14	940106	Thin Cup		1
15	940113	Cup Spring		1
16	941015	Tipping Valve Cover		1
17	Y812007	KMV Pressure Relief Valve		2
18	Y800605	PD60 LT Sectional Valve		1
19	960120	Tipping Pneumatic Cover		1
20	941021	KMV Flow Regulator Rod		1
21	9501011	Stud	M8x80	3
22	Y818003	Check Valve		1
23	946001	Pneumatik Coupling	1/8-6 Straight	1
24	946002	Pneumatik Coupling	1/8-6 Elbow	1
25	960102	45 LT Arm Cup		1
26	948001	45 LT Bellows		1
27	874001	45 LT Pivot		1
28	9509012	Retainer	Dın 472 - Ø 24	3
29	9508013	TOZ KEÇESİ	24 X 32,6 X 7/2	1
30	9507020	O-RİNG	16x2	8
31	9507050	O-RİNG	24x3	2
32	9507008	O-RİNG	20x2	1
33	9507003	O-RİNG	16x3	2
34	9507051	O-RİNG	28X3	2

ORVAL HYDRAULIC

ORV KMW

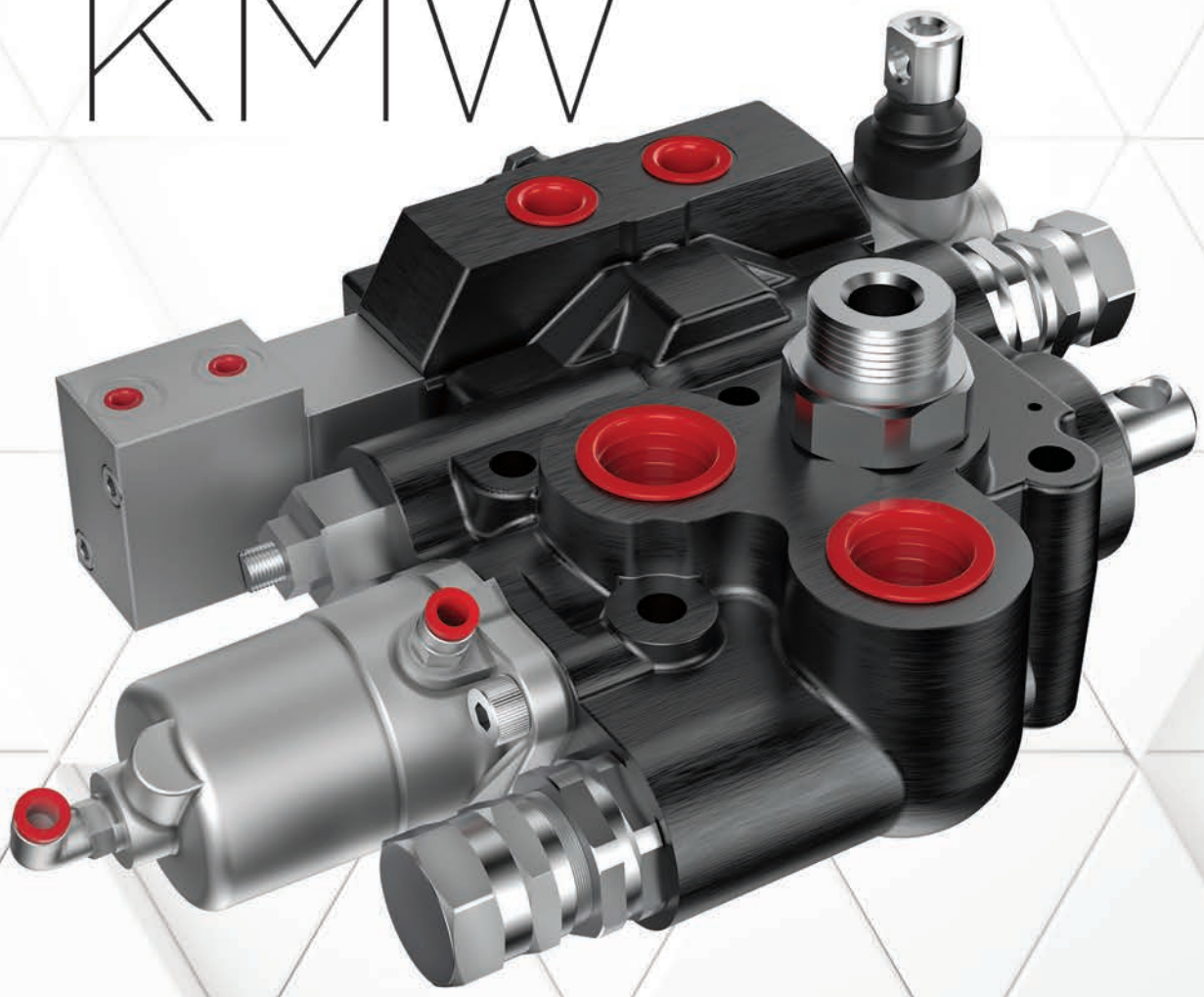

ORVAL HYDRAULIC

TIPPER VALVE

ORV-RSV



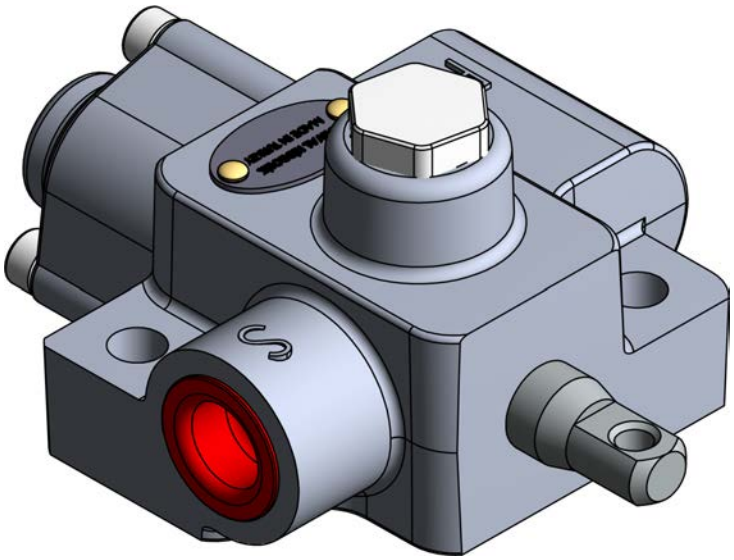

CONTENTS

Working Conditions	3
Dimensional Data	3
Hydraulic Circuit	3
Technical Data	3

Additional Informations

Note: This catalog shows the product in the most standard configurations. For Other Configurations, more detailed information or special request, Please contact Customer Service Dpt.

Warning!: All specifications of this catalog refer to the standard product at this date (03/2013). ORVAL, oriented to a continuous improvement, reserves the right to discontinue, modify or revise the specifications, without notice.

ORVAL IS NOT RESPONSIBLE FOR ANY DAMAGE CAUSED BY
AN INCORRECT USE OF THE PRODUCT.

WORKING CONDITIONS

MODEL	ORV-4B
Nominal Flow Displacement Totally	80 l/min 21 USGPM
Maximum Operating Pressure	300 Bar - 4400 PSI
Weight	3,2 Kg – 7,05 lbs
Oil Temperature with NBR Seals	-20 to 80 C° (-4 to 176 F°)
with FPM (Viton) Seals	-20 to 100 C° (-4 to 212 F°)
Oil Filtration	≤30 µ
Ambiant Temperature Range	-35 to 60 C° (-31 to 140 F°)
Internal Leakage at 100 bar (1450 PSI), 40C° (110 F°), 46 cSt – A(B)–T)	3 cm3/min 0,18 in3/min
Max. Level Of Contamination	19/16 - ISO 4406

Not: This catalogue shows technical specifications measured with mineral oil of 46 mm2/s-46 cSt viscosity at 40 C° temparture.

Double acting hand pumps suitable to operate single acting applications. They can be fitted also onto tank and are equipped with tapered lowering valve. They are available with nodular cast-iron body and nickel-plated spool.

PORTS THREADS And STANDART THREADS			
Model	**BSP (Iso 228)**	**UN-UNF (Iso 11926-1)**	**Metric (Iso 262)**
RSV	G 1/2	3/4 - 16 UNF	M22x1.5

DIMENSIONAL DATA

RSV – End Of Stroke Valves

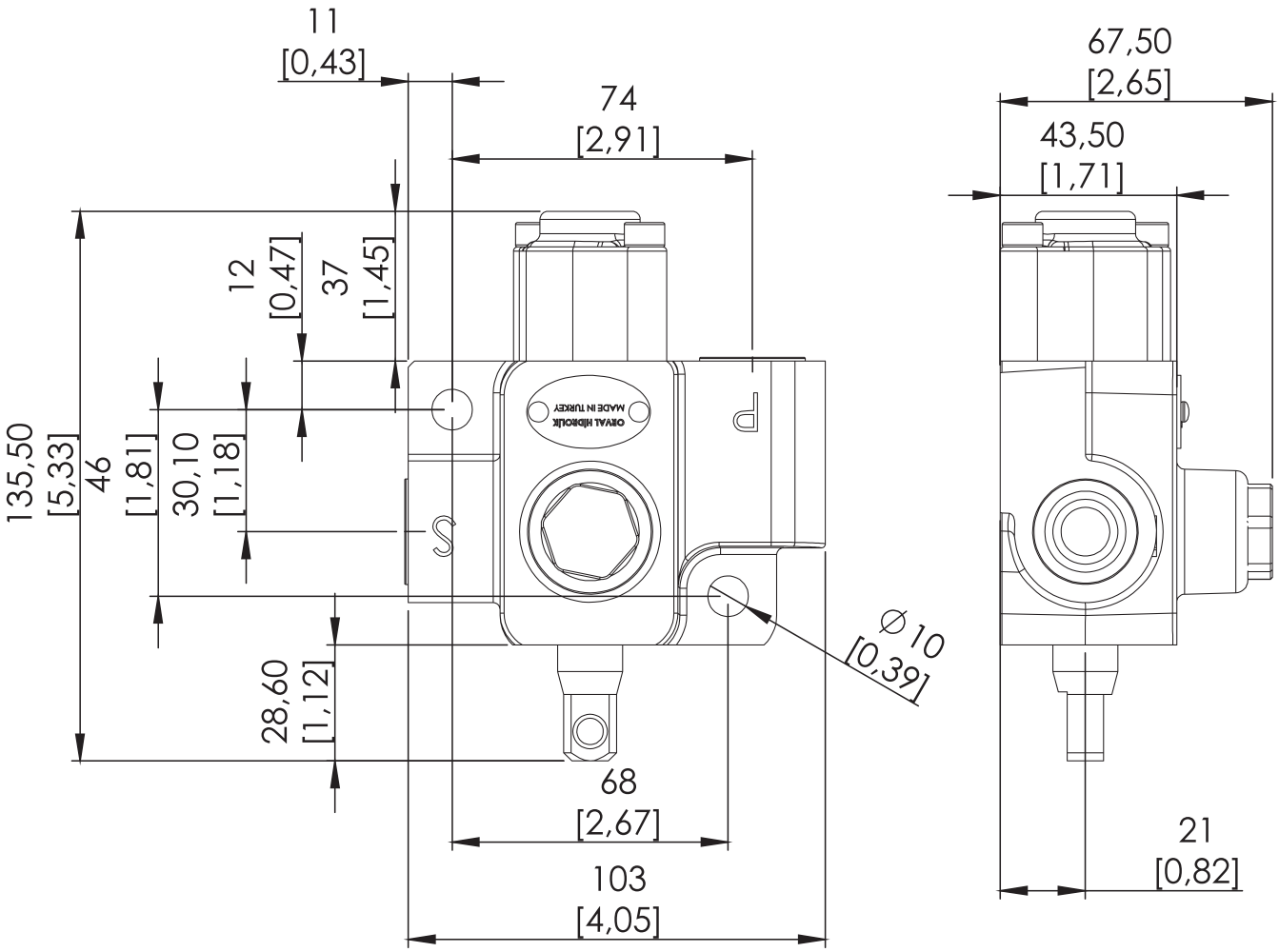

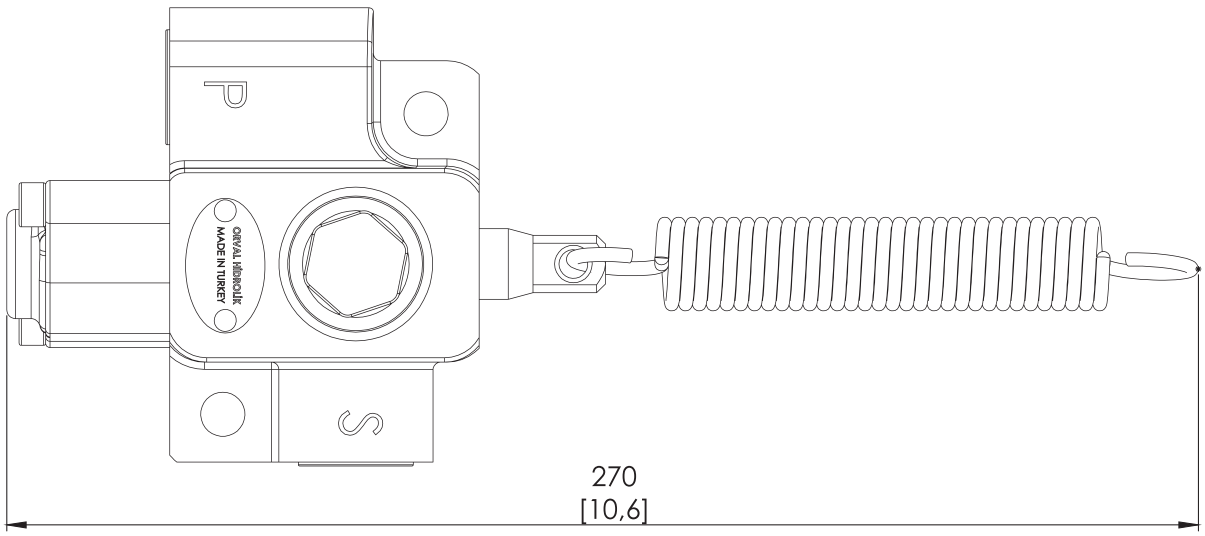

HYDRAULIC CIRCUIT

RSV-end of stroke valve

Port Apperance

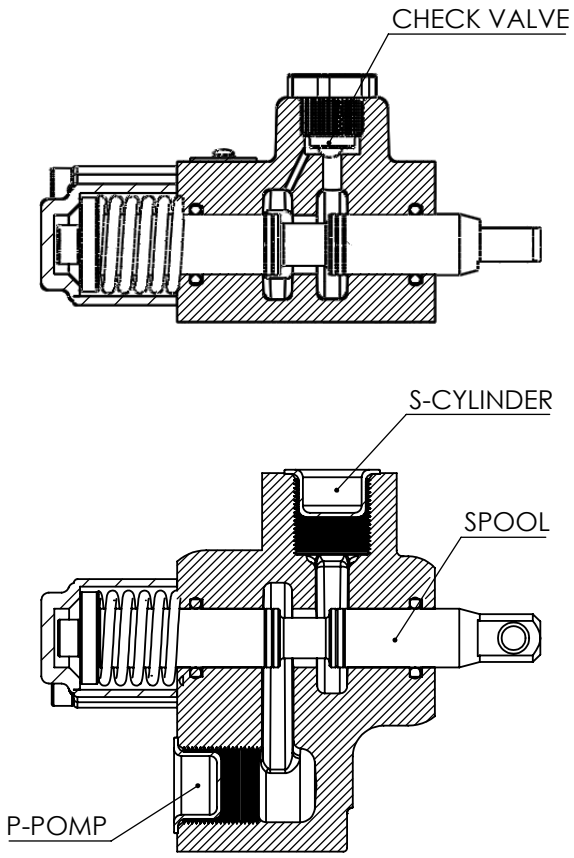

Diagram

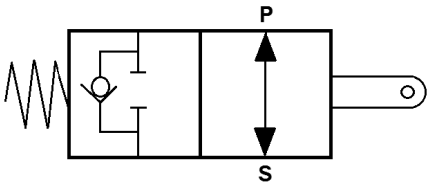

RSV - Part List

Order Example

ORV RSV

Base Code "0" — Type

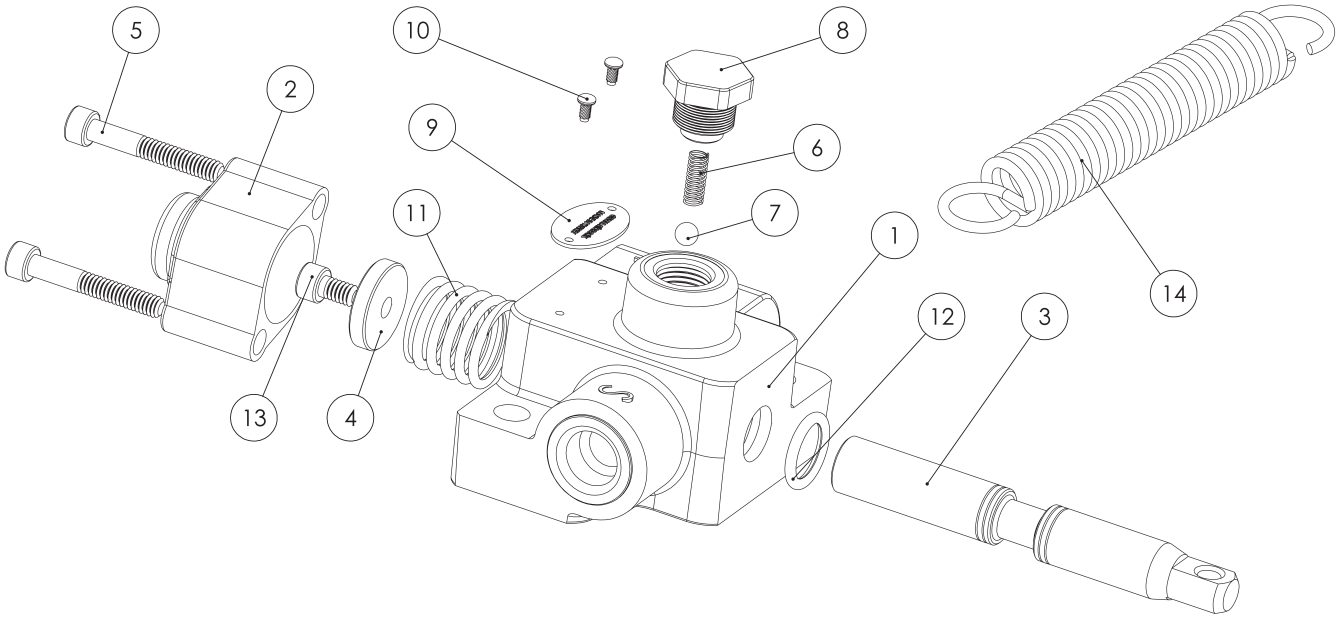

ITEM NO	ORDER CODE	PART NAME	DESCRIPTION	QUANTITY
1	1509120	RSV Body		1
2	960112	Spring Cap		1
3	820001	RSV 1A Spool		1
4	9505019	RSV Washer		1
5	9501005	Bolt	M6x35	2
6	940120	RSV Check Valve Spring		1
7	9510002	Suction Ball		1
8	943024	RSV Check Valve Plug		1
9	950001	Number Plate		1
10	950000	Rivet		1
11	940121	RSV Spool Spring		1
12	9507003	O-ring	16x3	2
13	9501001	Bolt	M5x14	1
14	940122	RSV Tension Spring		1

ORVAL HYDRAULIC

TIPPER VALVE
ORV-2B

CE

TÜV International Certification
TÜV THÜRINGEN
CERT
AZAV
15 190 17185
TIC

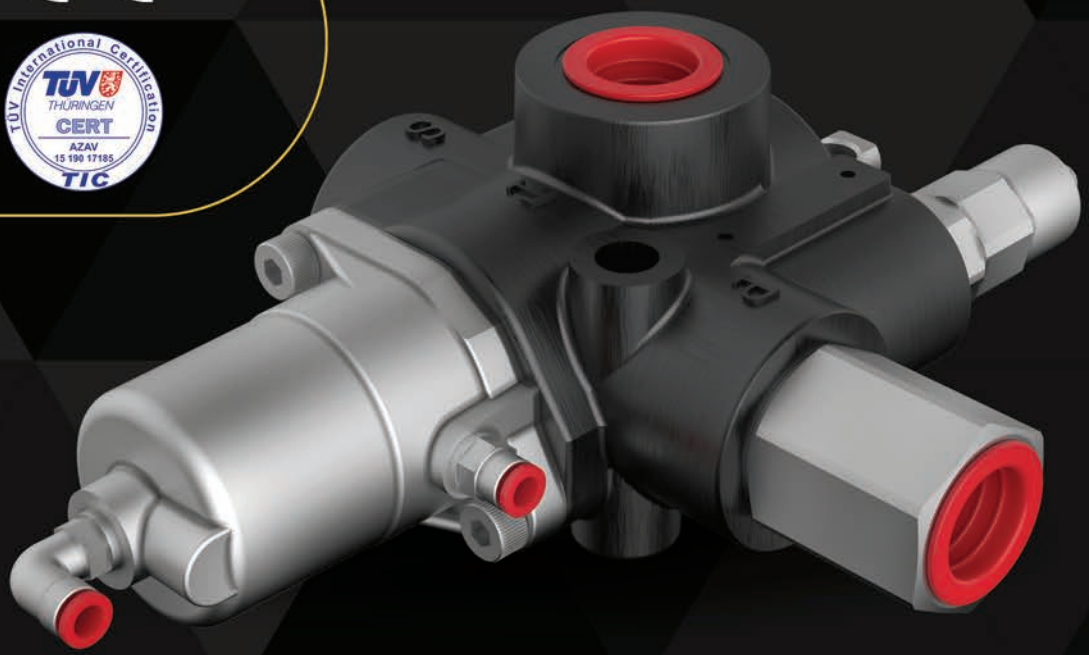

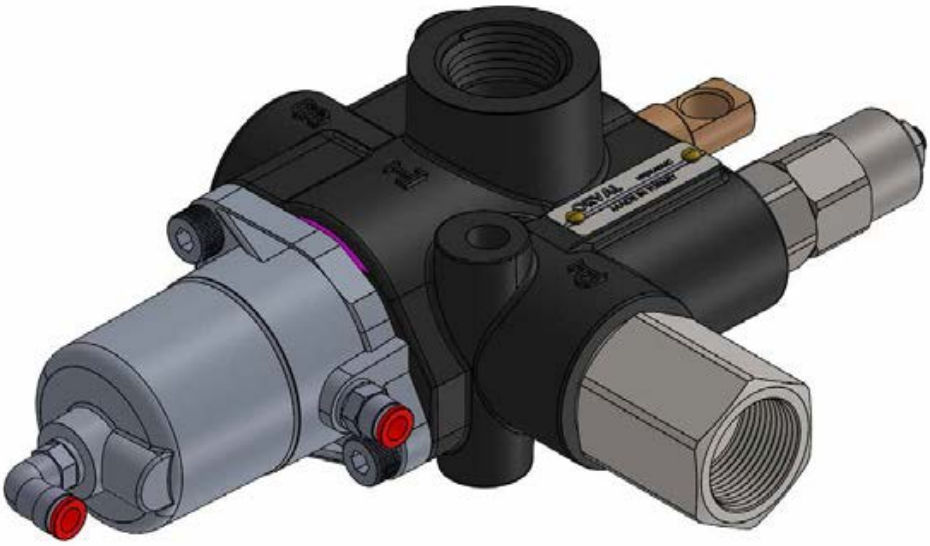

CONTENTS

Working Conditions	3
Dimensional Data and Pressure Drop	3
Hydraulic Circuit	3
Ordering Codes	3

Additional Informations

Note: This catalog shows the product in the most standard configurations. For Other Configurations, more detailed information or special request, Please contact Customer Service Dpt.

Warning!: All specifications of this catalog refer to the standard product at this date (10/2018). ORVAL, oriented to a continuous improvement, reserves the right to discontinue, modify or revise the specifications, without notice.

ORVAL IS NOT RESPONSIBLE FOR ANY DAMAGE CAUSED BY
AN INCORRECT USE OF THE PRODUCT.

WORKING CONDITIONS

MODEL	ORV-2B
Nominal Flow Displacement	110 l/dk 29 U.S.G.M.
- Pilot Pressure	6-12 Bar 90-180 PSI
- Tank Pressure	30 Bar - 450 PSI
Maximum Operating Pressure	190 Bar - 2800 PSI
Maximum Peak Pressure	250 Bar - 3600 PSI
Weight	3,2 Kg-7,05 lbs
Oil Temperature with NBR Seals	-20 to 80 C° (-4 to 176 F°)
Oil Viscosity – Operating Range Minumum / Maximum	From 10 to 75 mm2/s - 10 / 400 mm2/s From 10 to 75 cSt - 10 / 400 cSt
Oil Filtration	≤30 µ
Ambiant Temperature Range	-35 to 80 C° (-31 to 140 F°)
Internal Leakage at 100 bar (1450 PSI), 40C° (110 F°), 46 cSt – A(B)–T)	3 cm3/min 0,18 in3/min
Max. Level Of Contamination	19/16 - ISO 4406

Not: This catalogue shows technical specifications measured with mineral oil of 46 mm2/s-46 cSt viscosity at 40 C° temparture.

PORT	ORV-2B
P Pressure Port	G 1" (G 3/4)
S Cylinder Port	G 1" (G 3/4)
T Tank Port	G 1" (G 3/4)
X-Y Pneumatic	G 1/4" (Ø6)

DIMENSIONAL DATA AND PRESSURE DROP

Dimensional Data

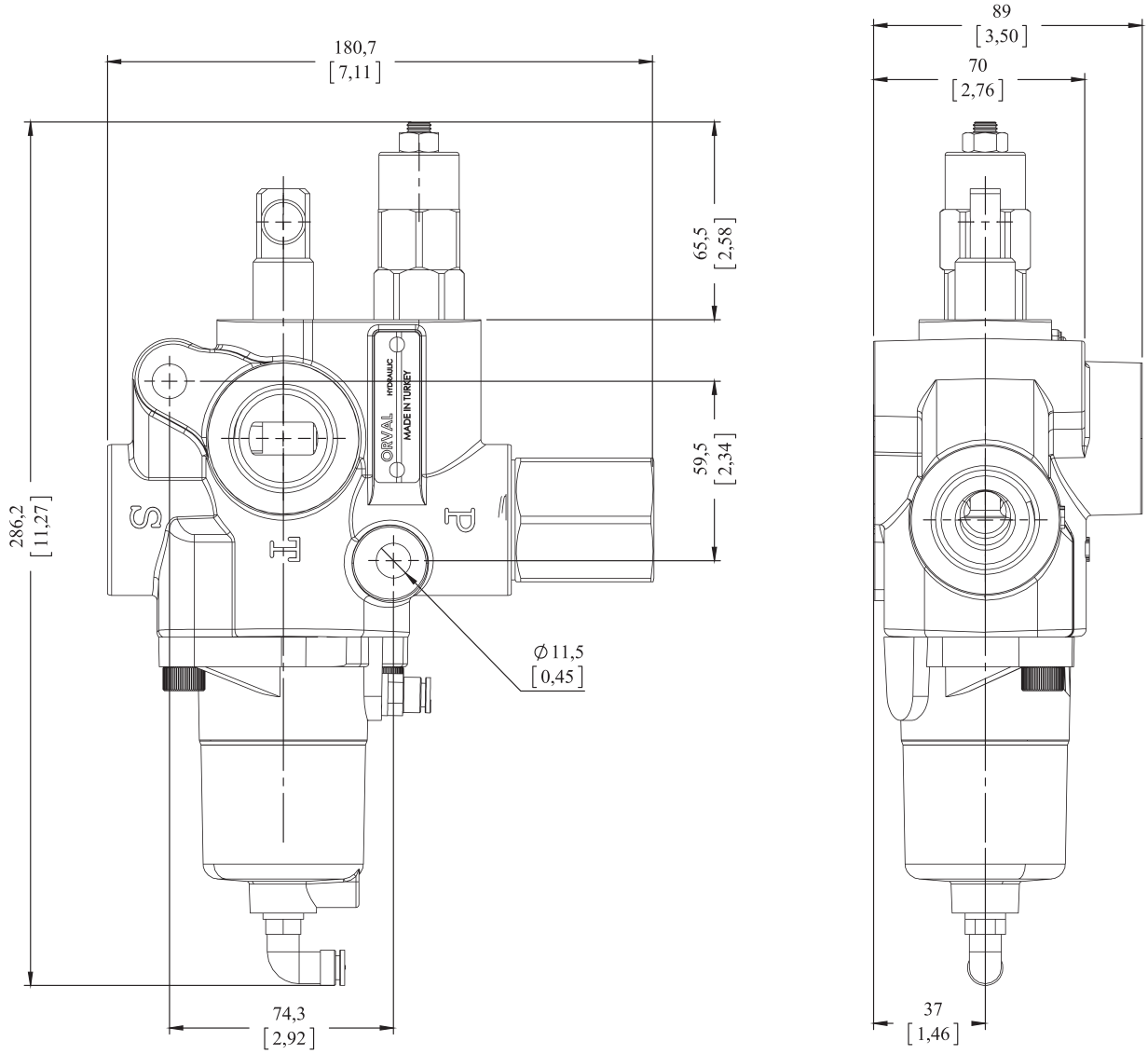

Pressure Drop (ΔP) - Pressure Range

Pressure Range Options		
Order Code	**Product Code**	**Range - Settings**
SMR1-080	2SMR180080	Range 0-80 Bar Setting 80 Bar
SMR2-120	2SMR280120	Range 60-200 Bar Setting 120 Bar

HDRAULIC CIRCUIT

Port Direction and Type

Port Apperance

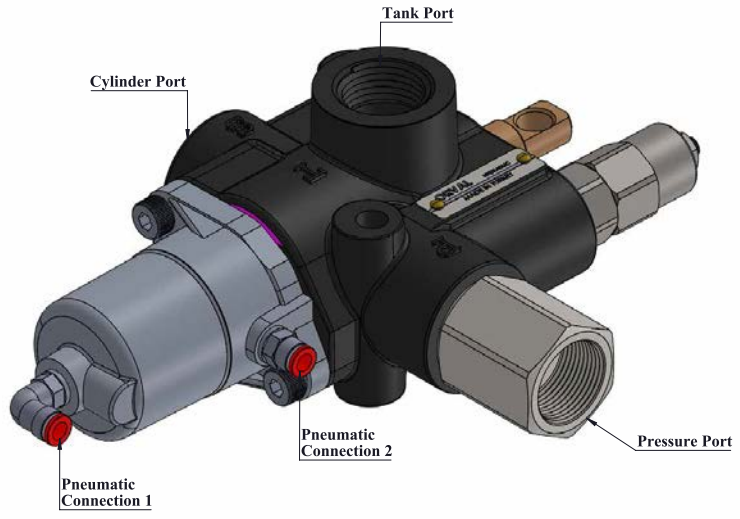

Diagram

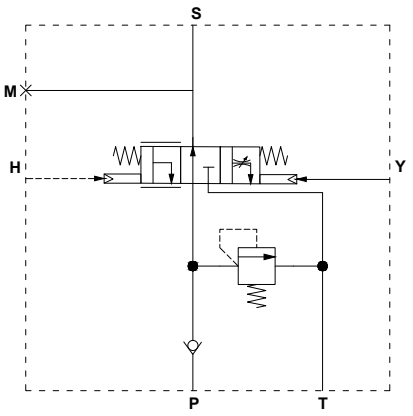

ORDERING CODES

Order Example

ORV 2B - 3/4"

Base Code "0"

Type

Port Size

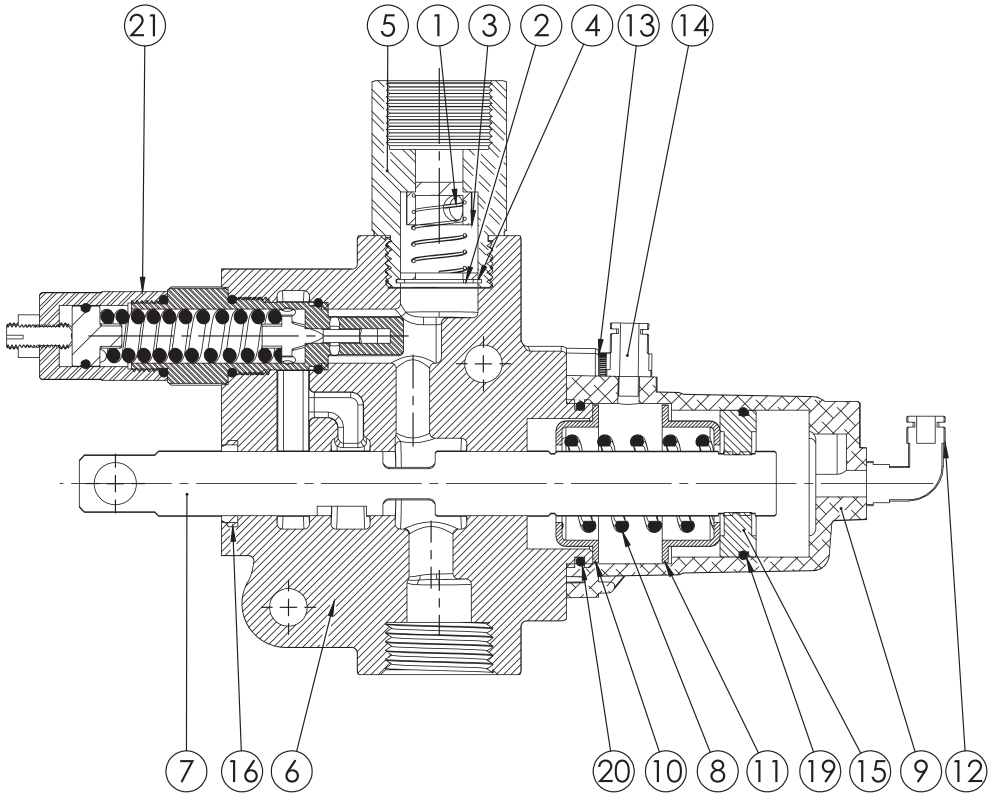

ITEM NO	ORDER CODE	PART NAME	DESCRIPTION	QUANTITY
1	940123	Check Valve Spring		1
2	9509008	Retainer	DIN 472 - Ø 24	1
3	943015	Check Valve Thrust Part		1
4	9505018	Check Valve Washer		1
5	943014	1" Tipping Check Valve Coupling		1
6	15302B30	2B Tipping Base		1
7	820201	2B Tipping Spoole		1
8	940113	Cup Spring		1
9	960120	Tipping Pneumatic Cover		1
10	940104	Thin Cup		1
11	940105	Thick Cup		1
12	946002	Pneumatic Coupling	1/8-6 Elbow	1
13	9501010	DIN 972 Bolt	M8x20	2
14	946001	Pneumatic Coupling	1/8-6 Straight	1
15	941014	Pneumatic Piston		1
16	9508007	Wipers	20x28x7/4	1
17	9507005	O-ring	20x3	2
18	9507020	O-ring	16x2	1
19	9507034	O-ring	40x2,5	1
20	9507036	O-ring	44x3	1
21	Y812003	Pressure Relief Valve		1
22	9509011	Retainer	DIN 472 - Ø 20	3

ORVAL HYDRAULIC

TIPPER VALVE
ORV-3B

CE

TÜV International Certification
TÜV THÜRINGEN
CERT
AZAV
15 190 17185
TIC

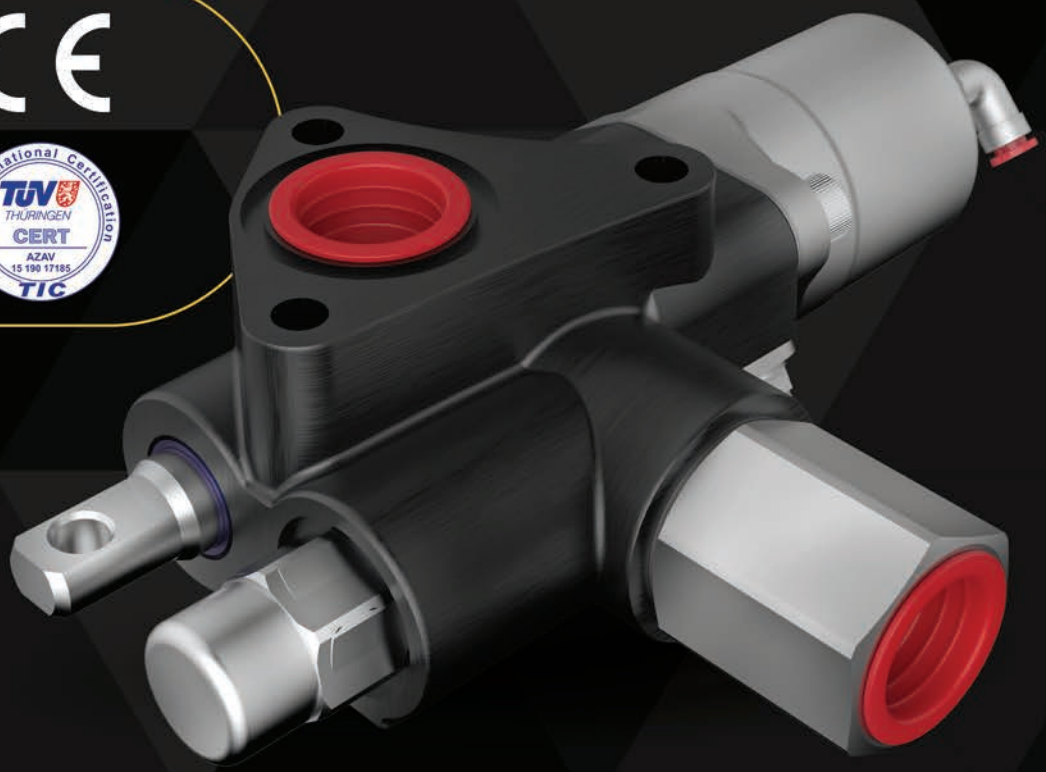

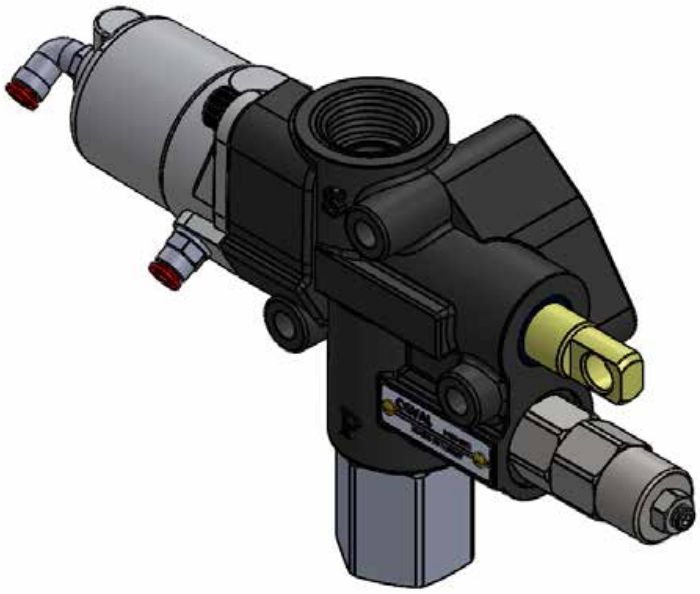

CONTENTS

Working Conditions	3
Dimensional Data and Pressure Drop	3
Hydraulic Circuit	3
Ordering Codes	3

Additional Informations

Note: This catalog shows the product in the most standard configurations. For Other Configurations, more detailed information or special request, Please contact Customer Service Dpt.

Warning!: All specifications of this catalog refer to the standard product at this date (10/2018). ORVAL, oriented to a continuous improvement, reserves the right to discontinue, modify or revise the specifications, without notice.

ORVAL IS NOT RESPONSIBLE FOR ANY DAMAGE CAUSED BY
AN INCORRECT USE OF THE PRODUCT.

WORKING CONDITIONS

MODEL	ORV-3B
Nominal Flow Displacement	110 l/dk 29 U.S.G.M.
- Pilot Pressure	6-12 Bar 90-180 PSI
- Tank Pressure	30 Bar - 450 PSI
Maximum Operating Pressure	190 Bar - 2800 PSI
Maximum Peak Pressure	250 Bar - 3600 PSI
Weight	3,2 Kg-7,05 lbs
Oil Temperature with NBR Seals	-20 to 80 C° (-4 to 176 F°)
Oil Viscosity – Operating Range Minumum / Maximum	From 10 to 75 mm2/s - 10 / 400 mm2/s From 10 to 75 cSt - 10 / 400 cSt
Oil Filtration	≤30 µ
Ambiant Temperature Range	-35 to 80 C° (-31 to 140 F°)
Internal Leakage at 100 bar (1450 PSI), 40C° (110 F°), 46 cSt – A(B)–T)	3 cm3/min 0,18 in3/min
Max. Level Of Contamination	19/16 - ISO 4406

Not: This catalogue shows technical specifications measured with mineral oil of 46 mm2/s-46 cSt viscosity at 40 C° temparture.

PORT	ORV-2B
P Pressure Port	G 1" (G 3/4)
S Cylinder Port	G 1" (G 3/4)
T Tank Port	G 1" (G 3/4)
X-Y Pneumatic	G 1/4" (Ø6)

DIMENSIONAL DATA AND PRESSURE DROP

Dimensional Data

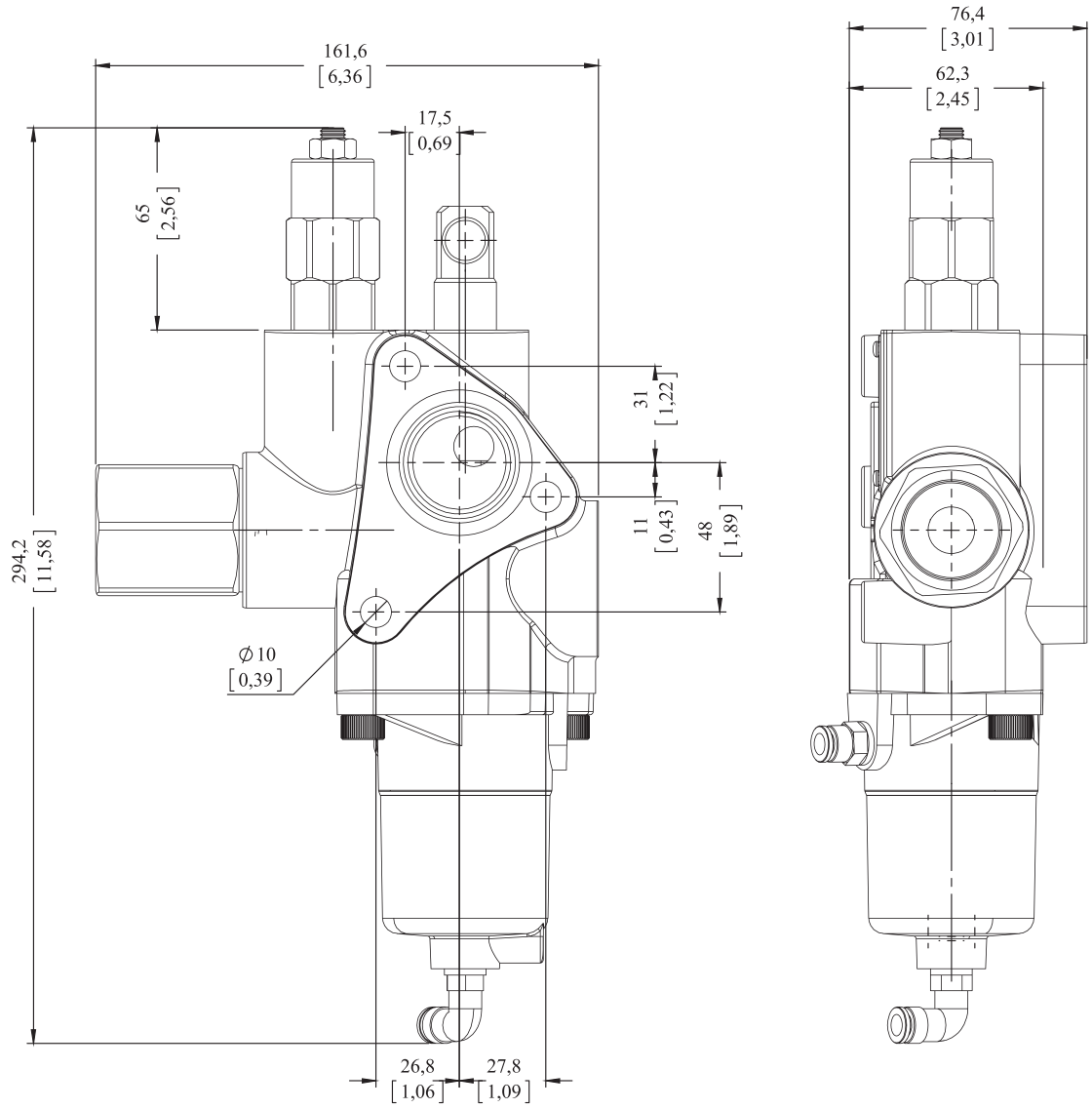

Pressure Drop (ΔP) - Pressure Range

Pressure Range Options		
Order Code	**Product Code**	**Range - Settings**
SMR1-080	2SMR180080	Range 0-80 Bar Setting 80 Bar
SMR2-120	2SMR280120	Range 60-200 Bar Setting 120 Bar

HYDRAULIC CIRCUIT

Port Direction and Type

Port Apperance

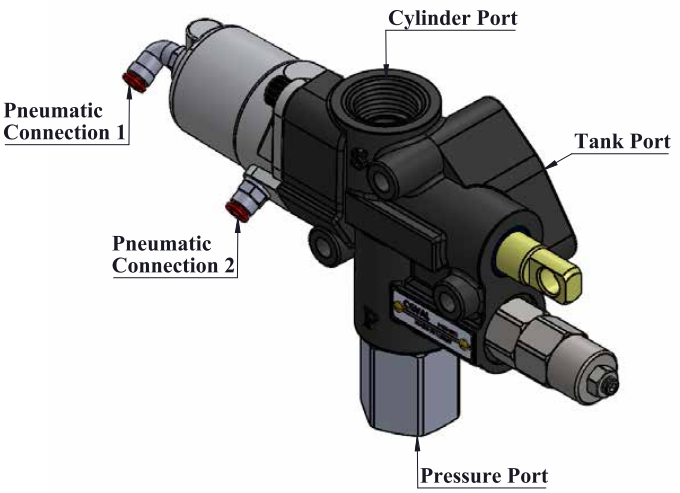

Diagram

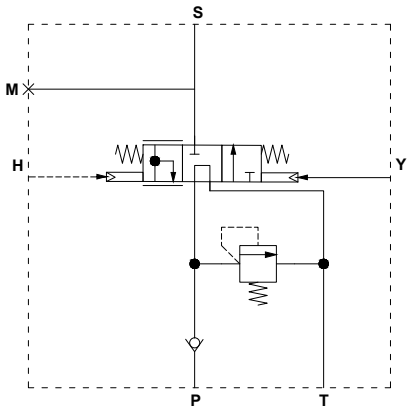

ORDERING CODES

Order Example

ORV 3B - 3/4"

Base Code "0"

Type

Port Size

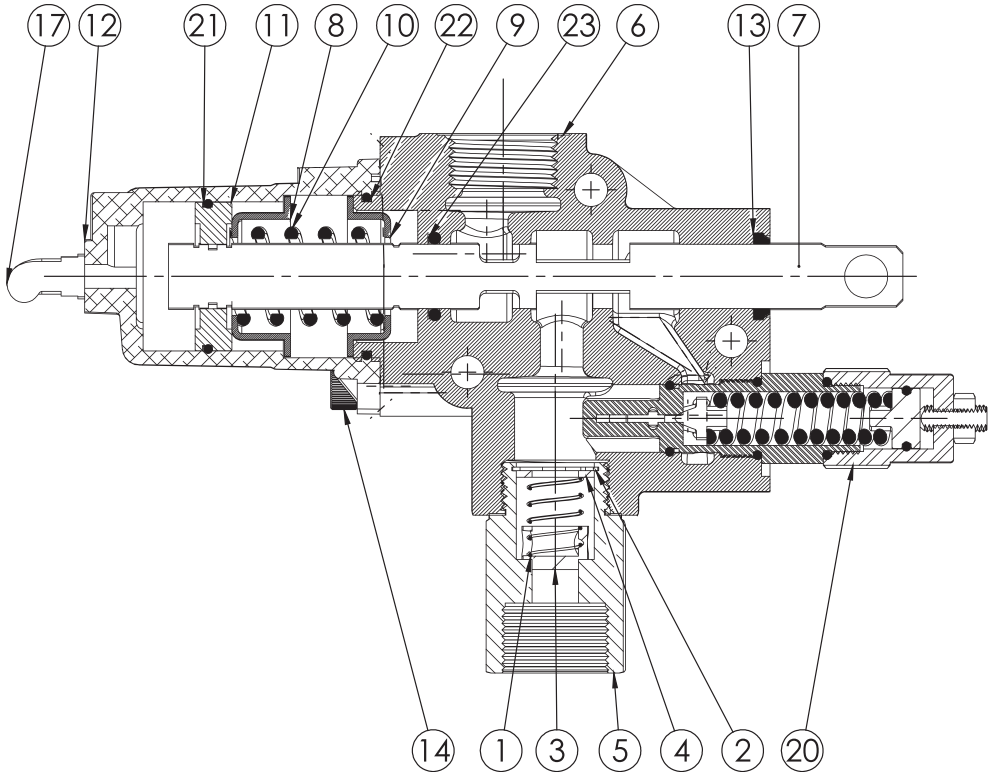

ITEM NO	ORDER CODE	PART NAME	DESCRIPTION	QUANTITY
1	940123	Check Valve Spring		1
2	9509008	Retainer	DIN 472 - Ø 24	1
3	943015	Check Valve Thrust Part		1
4	9505018	Check Valve Washer		1
5	943014	1" Tipping Check Valve Coupling		1
6	15303B30	3B Tipping Base		1
7	820301	3B Tipping Spoole		1
8	940104	Thin Cup		1
9	940105	Thick Cup		1
10	940113	Cup Spring		1
11	941014	Pneumatic Piston		1
12	960120	Tipping Pneumatic Cover		1
13	9508007	Wipers	20x28x7/4	1
14	9501010	DIN 972 Bolt	M8x20	2
15	946002	Pneumatic Coupling	1/8-6 Elbow	1
16	946001	Pneumatic Coupling	1/8-6 Straight	1
17	Y812003	Pressure Relief Valve		1
18	9507034	O-ring	40x2,5	1
19	9507036	O-ring	44x3	1
20	9507005	O-ring	20x3	2
21	9507020	O-ring	16x2	1
22	9509011	Retainer	DIN 472 - Ø 20	3

ORVAL HYDRAULIC

TIPPER VALVE

ORV-4B

CE

TÜV International Certification
TÜV THÜRINGEN
CERT
AZAV
15 190 17185
TIC

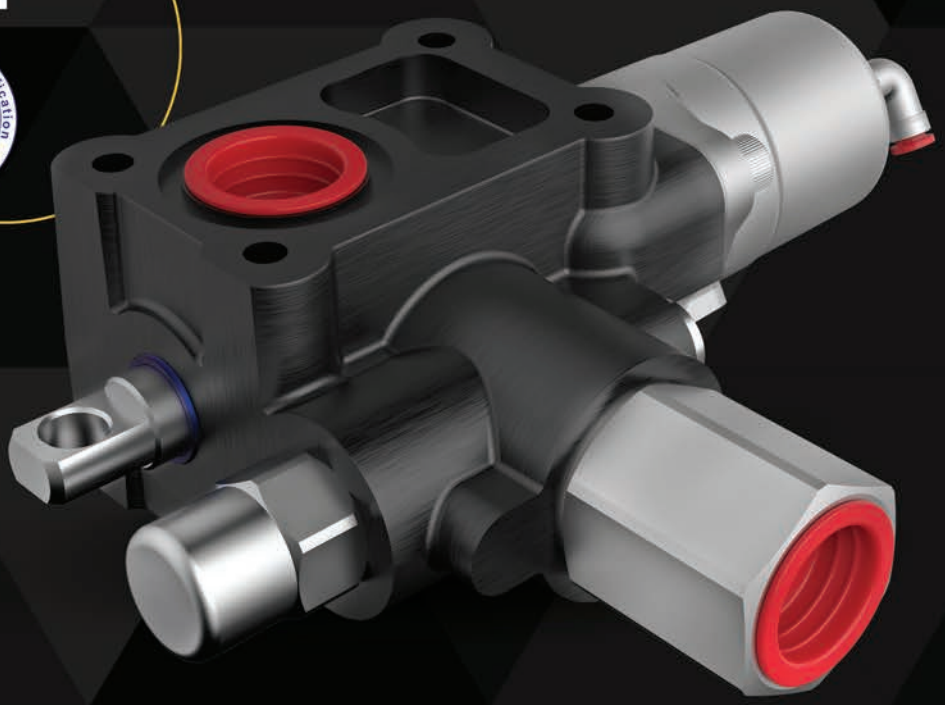

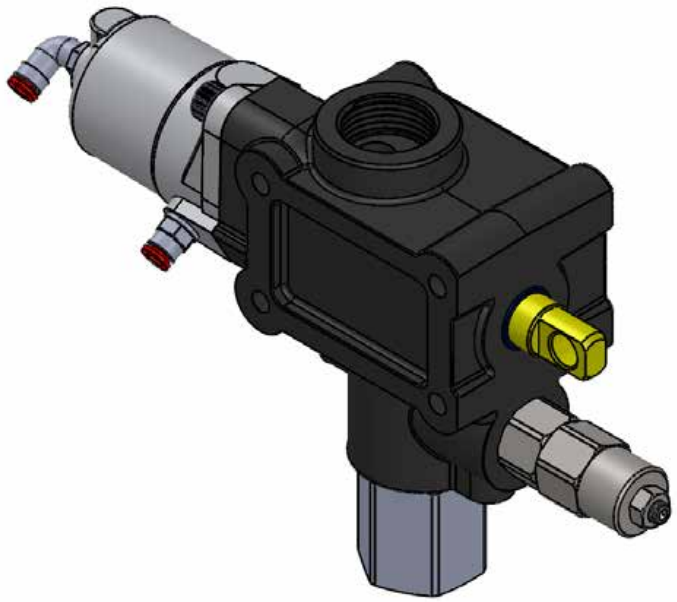

CONTENTS

Working Conditions	3
Dimensional Data and Pressure Drop	3
Hydraulic Circuit	3
Ordering Codes	3

Additional Informations

Note: This catalog shows the product in the most standard configurations. For Other Configurations, more detailed information or special request, Please contact Customer Service Dpt.

Warning!: All specifications of this catalog refer to the standard product at this date (10/2018). ORVAL, oriented to a continuous improvement, reserves the right to discontinue, modify or revise the specifications, without notice.

ORVAL IS NOT RESPONSIBLE FOR ANY DAMAGE CAUSED BY
AN INCORRECT USE OF THE PRODUCT.

WORKING CONDITIONS

MODEL	ORV-4B
Nominal Flow Displacement Main	140 l/dk 37 U.S.G.M.
- Pilot Pressure	6-12 Bar 90-180 PSI
- Tank Pressure	30 Bar - 450 PSI
Maximum Operating Pressure	190 Bar - 2800 PSI
Maximum Peak Pressure	250 Bar - 3600 PSI
Weight	3,2 Kg-7,05 lbs
Oil Temperature with NBR Seals	-20 to 80 C° (-4 to 176 F°)
Oil Viscosity – Operating Range Minumum / Maximum	From 10 to 75 mm2/s - 10 / 400 mm2/s From 10 to 75 cSt - 10 / 400 cSt
Oil Filtration	≤30 µ
Ambiant Temperature Range	-35 to 80 C° (-31 to 140 F°)
Internal Leakage at 100 bar (1450 PSI), 40C° (110 F°), 46 cSt – A(B)–T)	3 cm3/min 0,18 in3/min
Max. Level Of Contamination	19/16 - ISO 4406

Not: This catalogue shows technical specifications measured with mineral oil of 46 mm2/s-46 cSt viscosity at 40 C° temparture.

PORT	ORV-4B
P Pressure Port	G 1" (G 3/4)
S Cylinder Port	G 1" (G 3/4)
T Tank Port	G 1" (G 3/4)
X-Y Pneumatic	G 1/4" (Ø6)

DIMENSIONAL DATA AND PRESSURE DROP

Dimensional Data

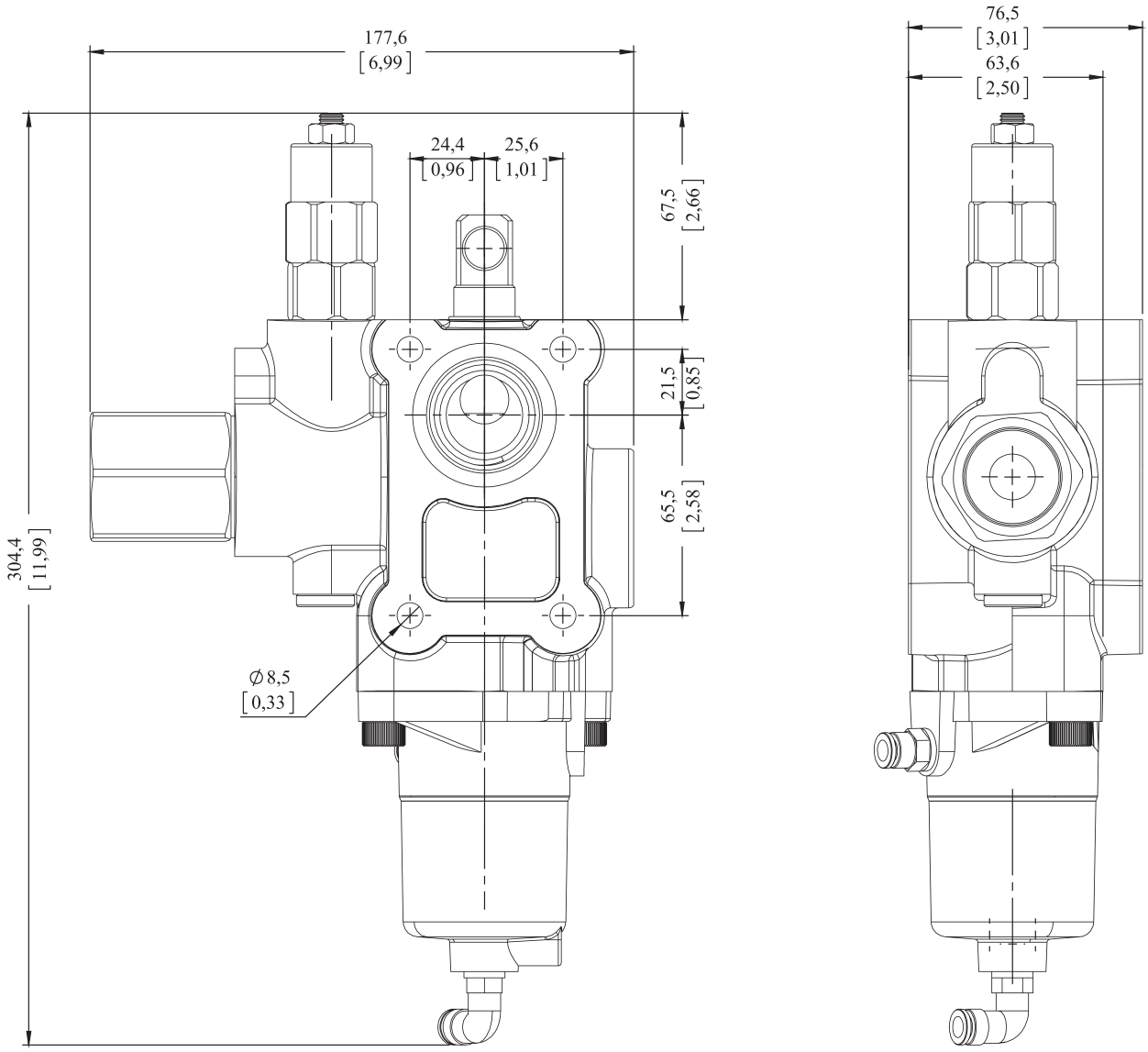

Pressure Drop (ΔP) - Pressure Range

Pressure Range Options		
Order Code	**Product Code**	**Range - Settings**
SMR1-080	2SMR180080	Range 0-80 Bar Setting 80 Bar
SMR2-120	2SMR280120	Range 60-200 Bar Setting 120 Bar

HYDRAULIC CIRCUIT

Port Direction and Type

Port Apperance

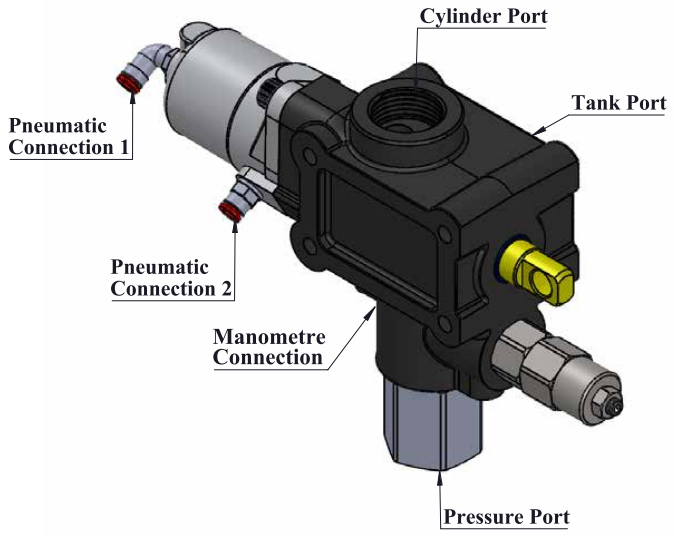

Diagram

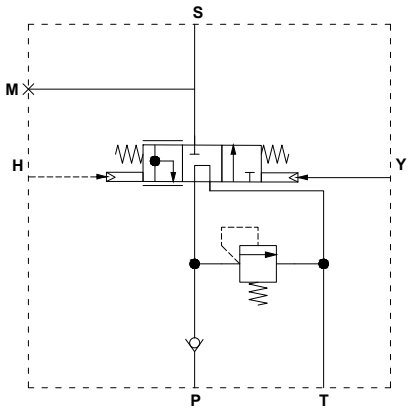

ORDERING CODES

Order Example

ORV 4B - 3/4"

Base Code "0"

Port Size

Type

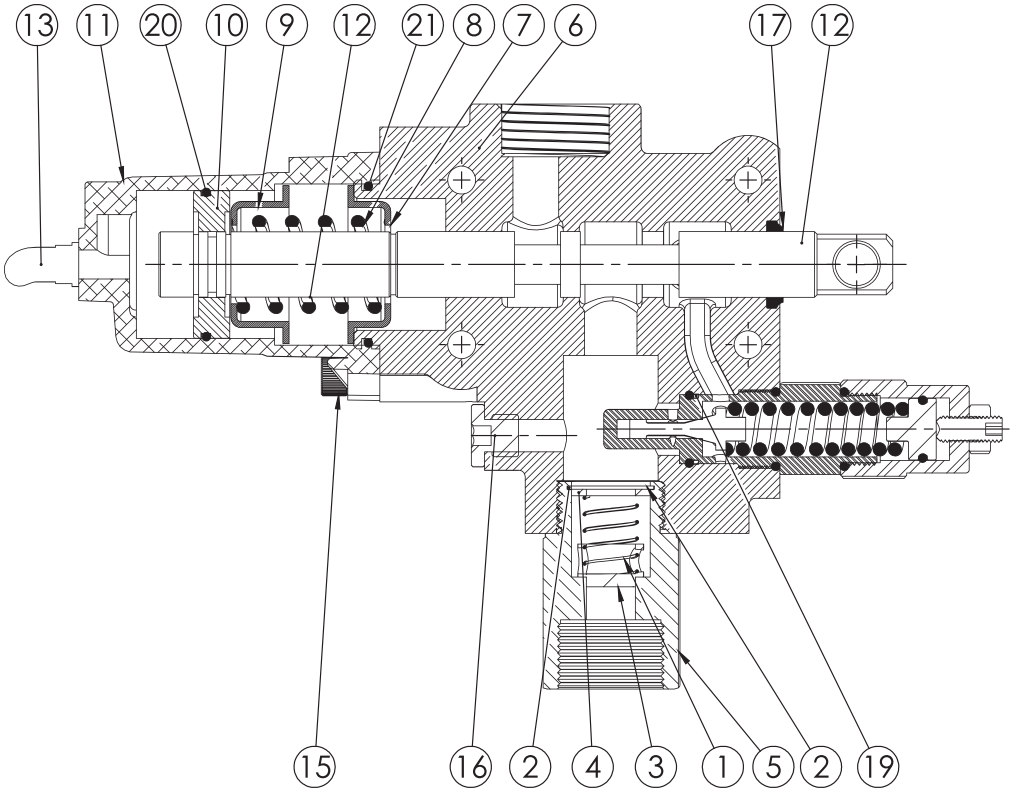

ITEM NO	ORDER CODE	PART NAME	DESCRIPTION	QUANTITY
1	940123	Check Valve Spring		1
2	9509008	Retainer	DIN 472 - Ø 24	1
3	943015	Check Valve Thrust Part		1
4	9505018	Check Valve Washer		1
5	943014	1" Tipping Check Valve Coupling		1
6	15304B30	4B Tipping Base		1
7	940104	Thin Cup		1
8	940113	Cup Spring		1
9	940105	Thick Cup		1
10	941014	Pneumatic Piston		1
11	960120	Tipping Pneumatic Cover		1
12	820401	4B Tipping Spoole		1
13	946002	Pneumatic Coupling	1/8-6 Elbow	1
14	946001	Pneumatic Coupling	1/8-6 Straight	1
15	9501010	DIN 972 Bolt	M8x20	2
16	9508007	Wipers	20x28x7/4	1
17	Y812003	Pressure Relief Valve		1
18	9507005	O-ring	20x3	2
19	9507034	O-ring	40x2,5	1
20	9507036	O-ring	44x3	1
21	943001	Plug	BSP 3/8"	1
22	9509011	Retainer	DIN 472 - Ø 20	3

ORVAL HYDRAULIC

TIPPER VALVE

ORV-K

CE

TÜV International Certification
TÜV THÜRINGEN
CERT
AZAV
15 190 17185
TIC



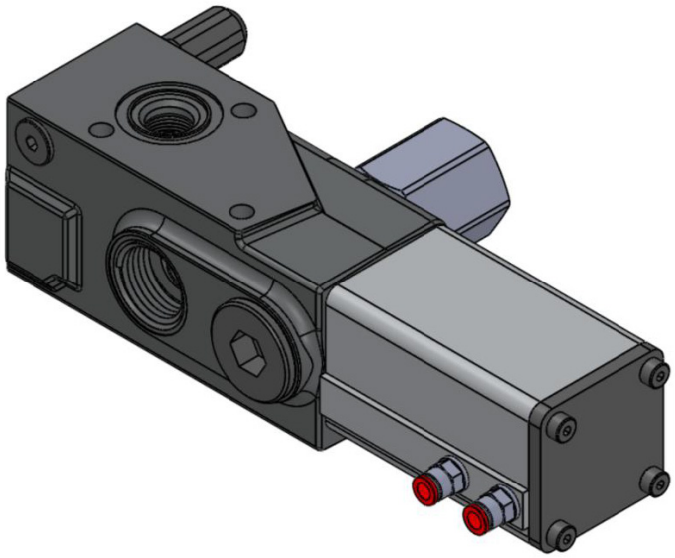

CONTENTS

Working Conditions	3
Dimensional Data and Pressure Drop	3
Hydraulic Circuit	3
Ordering Codes	3

Additional Informations

Note: This catalog shows the product in the most standard configurations. For Other Configurations, more detailed information or special request, Please contact Customer Service Dpt.

Warning!: All specifications of this catalog refer to the standard product at this date (10/2018). ORVAL, oriented to a continuous improvement, reserves the right to discontinue, modify or revise the specifications, without notice.

ORVAL IS NOT RESPONSIBLE FOR ANY DAMAGE CAUSED BY
AN INCORRECT USE OF THE PRODUCT.

WORKING CONDITIONS

MODEL	ORV-K
Nominal Flow Displacement	220 l/dk 59 USGPM
- Pilot Pressure	6-12 Bar 90-180 PSI
- Tank Pressure	10 Bar 150 PSI
Maximum Operating Pressure	315 Bar 4600 PSI
Maximum Peak Pressure	350 Bar 5100 PSI
Weight	3,8 Kg
Oil Temperature with NBR Seals	-20 to 80 C° (-4 to 176 F °)
Oil Viscosity – Operating Range Minumum / Maximum	From 10 to 75 mm2/s - 10 / 400 mm2/s From 10 to 75 cSt - 10 / 400 cSt
Oil Filtration	≤30 µ
Ambiant Temperature Range	-35 to 80 C° - (-31 to 140 F °)
Internal Leakage at 100 bar (1450 PSI), 40C° (110 F°), 46 cSt – A(B)–T)	3 cm3/min 0,18 in3/min
Max. Level Of Contamination	19/16 - ISO 4406

Not: This catalogue shows technical specifications measured with mineral oil of 46 mm2/s-46 cSt viscosity at 40 C° temparture.

PORT	ORV-K
P Pressure Port	G 1" (G 3/4)
S Cylinder Port	G 1" (G 3/4)
T Tank Port	G 1" (G 3/4)
X-Y Pneumatic	G 1/8" (Ø6)
M Port	G 1/8"

DIMENSIONAL DATA AND PRESSURE DROP

Dimensional Data

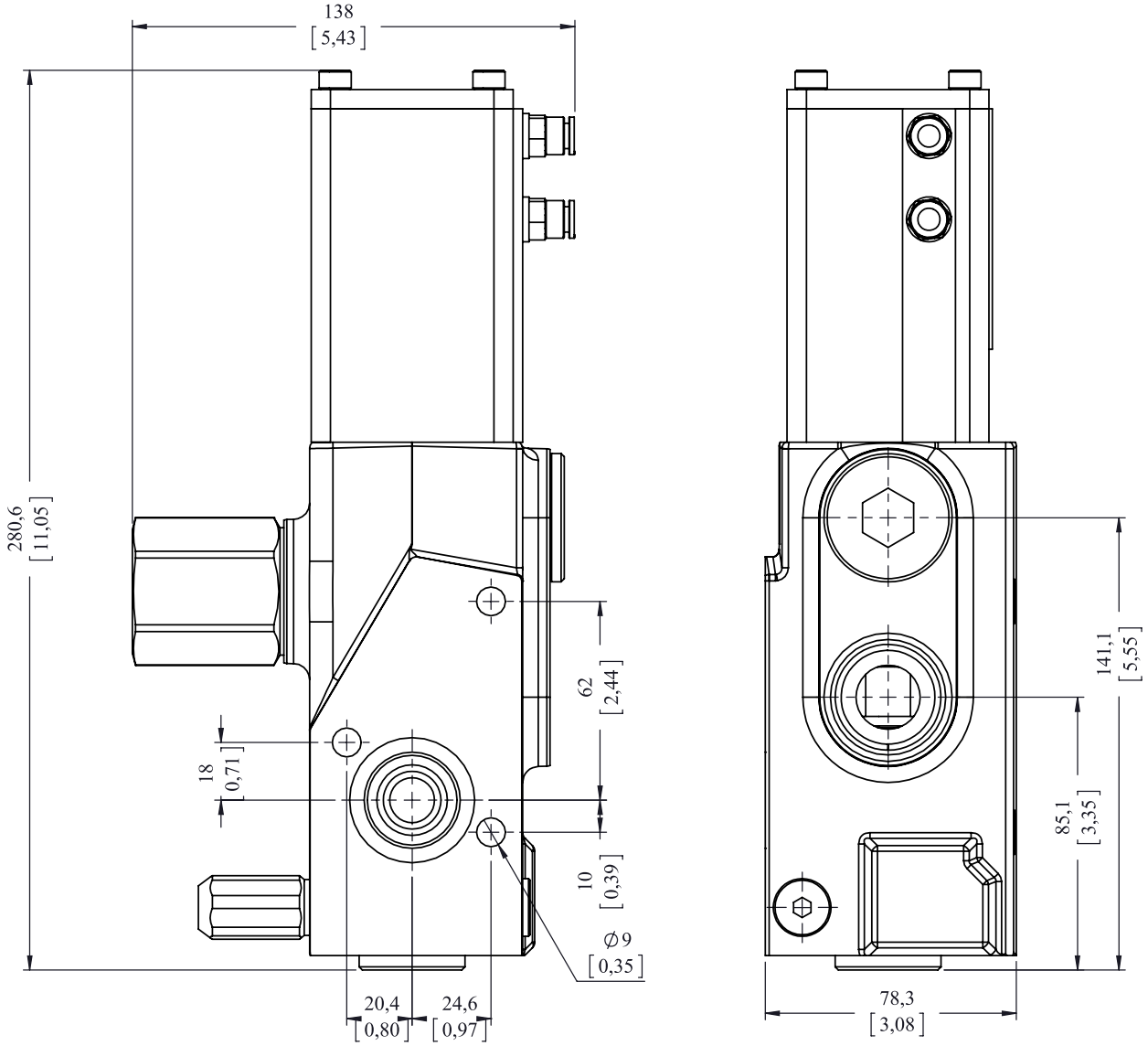

Pressure Drop (ΔP) - Pressure Range

Pressure Range Options		
Order Code	**Product Code**	**Range - Settings**
KMR1-080	2KMR180080	Range 63-135 bar Setting 80 bar
KMR2-125	2KMR280125	Range 100-190 bar Setting 125 bar
KMR3-175	2KMR280175	Range 125-250 bar Setting 175 bar
KMR4-220	2KMR280220	Range 200-315 bar Setting 220 bar

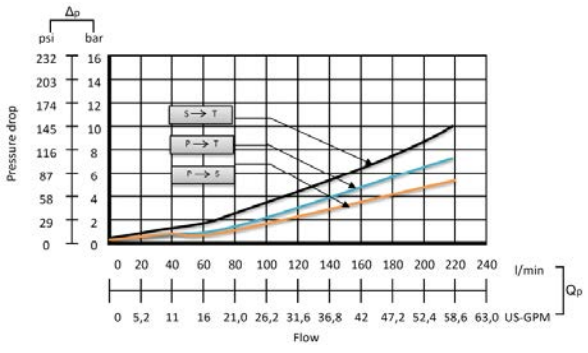

HYDRAULIC CIRCUIT

Port Direction and Type

Port Apperance

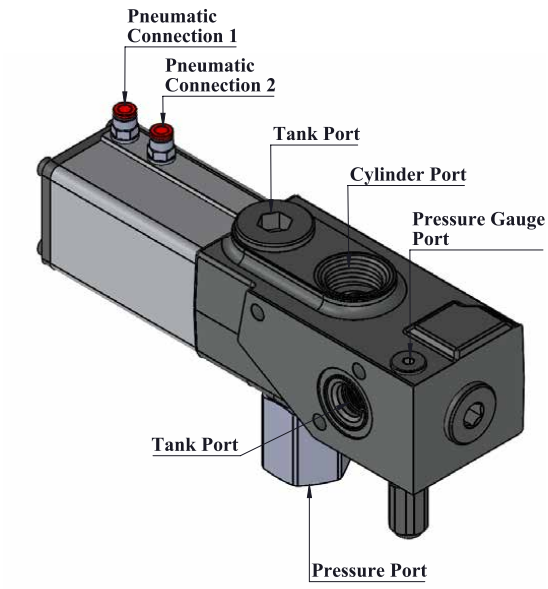

Diagram

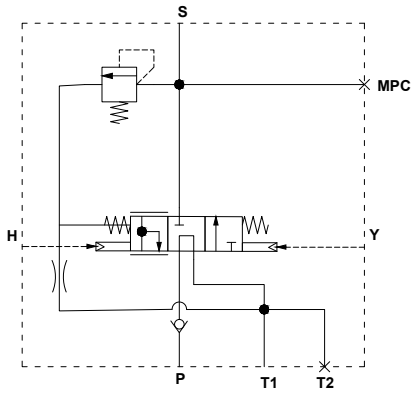

ORDERING CODES

Order Example

ORV - K - 1"

Base Code "0"

Port Size

Type

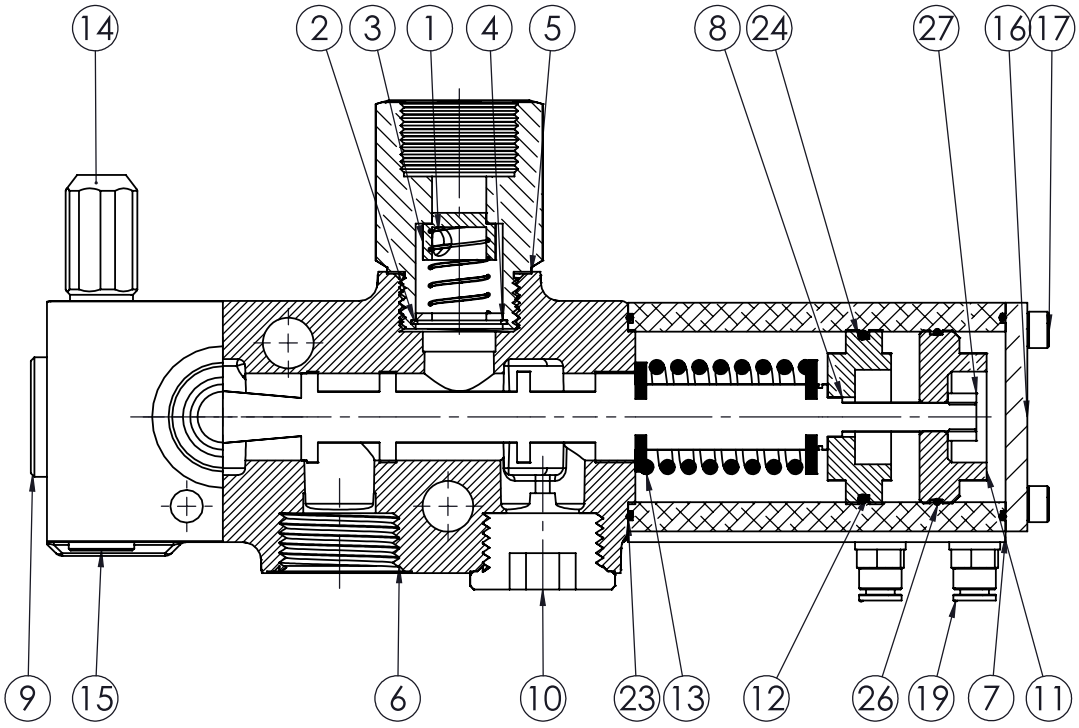

ITEM NO	ORDER CODE	PART NAME	DESCRIPTION	QUANTITY
1	940123	Check Valve Spring		1
2	9509008	Retainer	DIN 472 - Ø 24	1
3	943015	Check Valve Thrust Part		1
4	9505018	Check Valve Washer		1
5	943014	1" Tipping Check Valve Coupling		1
6	1530K40	Square Tipping Base		1
7	960121	Square Tipping Pneumatic Base		1
8	829801	Square Tipping Spoole		1
9	943003	Plug	BSP 3/4"	1
10	943004	Plug	BSP 1/2"	1
11	941019	Square Tipping Shaft		1
12	941020	Square Tipping Shaft		1
13	940131	Square Tipping Cup Spring		1
14	Y812006	Square Tipping Pressure Relief Valve		1
15	943001	Plug	BSP 3/8"	1
16	960122	Square Tipping Pneumatic Base		1
17	9501043	DIN 972 Bolt	M6x120	4
18	946001	Pneumatik Coupling	1/8-6 Straight	2
19	9503006	Spring Washer	M6	4
20	9507033	O-ring	53,67x1,78	2
21	9507048	O-ring	14x1,78	1
22	9513001	X-ring	40,87x3,53	1
23	9507049	O-ring	44X2,5	1
24				

ORVAL HYDRAULIC

HAND PUMP

ORV-HP





CONTENTS

Working Conditions	3
Dimensional Data	3
Ordering Codes TE Model	3
Ordering Codes CE Model	3
Ordering Codes KCE Model	3
Part List	3
Technical Data	3

Additional Informations

Note: This catalog shows the product in the most standard configurations. For Other Configurations, more detailed information or special request, Please contact Customer Service Dpt.

Warning!: All specifications of this catalog refer to the standard product at this date (03/2013). ORVAL, oriented to a continuous improvement, reserves the right to discontinue, modify or revise the specifications, without notice.

ORVAL IS NOT RESPONSIBLE FOR ANY DAMAGE CAUSED BY
AN INCORRECT USE OF THE PRODUCT.

WORKING CONDITIONS

MODEL	TE - 25	CE - 25	KCE - 25
Nominal Flow Displacement - Totaly	25 cc/cycle - 0,007 U.S.G./cycle		
- Pull Direction	14,5 cc/cycle - 0,004 U.S.G./cycle		
- Push Direction	10,5 cc/cycle - 0,003 U.S.G./cycle		
Maximum Operating Pressure	300 Bar - 4400 PSI		
Weight	3,2 Kg-7,05 lbs	3,2 Kg-7,05 lbs	3,2 Kg-7,05 lbs
Oil Temperature with NBR Seals	-20 to 80 C° (-4 to 176 F°)		
with FPM (Viton) Seals	-20 to100 C° (-4 to 212 F°)		
Oil Viscosity – Operating Range Minumum / Maximum	From 10 to 75 mm2/s - 10 / 400 mm2/s From 10 to 75 cSt - 10 / 400 cSt		
Oil Filtration	≤30 µ		
Ambiant Temperature Range	-35 to 60 C° (-31 to 140 F°)		
Internal Leakage (at 100 bar (1450 PSI), 40C° (110 F°), 46 cSt – A(B)–T)	3 cm3/min		
Max. Level Of Contamination	19/16 - ISO 4406		

Not: This catalogue shows technical specifications measured with mineral oil of 46 mm2/s-46 cSt viscosity at 40 C° temparture.

Double acting hand pumps suitable to operate single acting applications. They can be fitted also onto tank and are equipped with tapered lowering valve. They are availablewith nodular cast-iron body and nickel-plated spool.

PORTS THREADS AND STANDARD THREADS

MODEL	BSP (Iso 228)	UN-UNF (Iso 11926-1)	Metric (Iso 262)
TT-25	G 3/8"	3/4 - 16 UNF	M22x1.5
TC-25	G 3/8"	3/4 - 16 UNF	M22x1.5
CT-25	G 1/4"	3/4 - 16 UNF	M22x1.5
CC-25	G 1/4"	3/4 - 16 UNF	M22x1.5
RTC-25	G 3/8"	3/4 - 16 UNF	M22x1.5

DIMENSIONAL DATA

TT 25 - TC 25 - Single Action Hand Pump

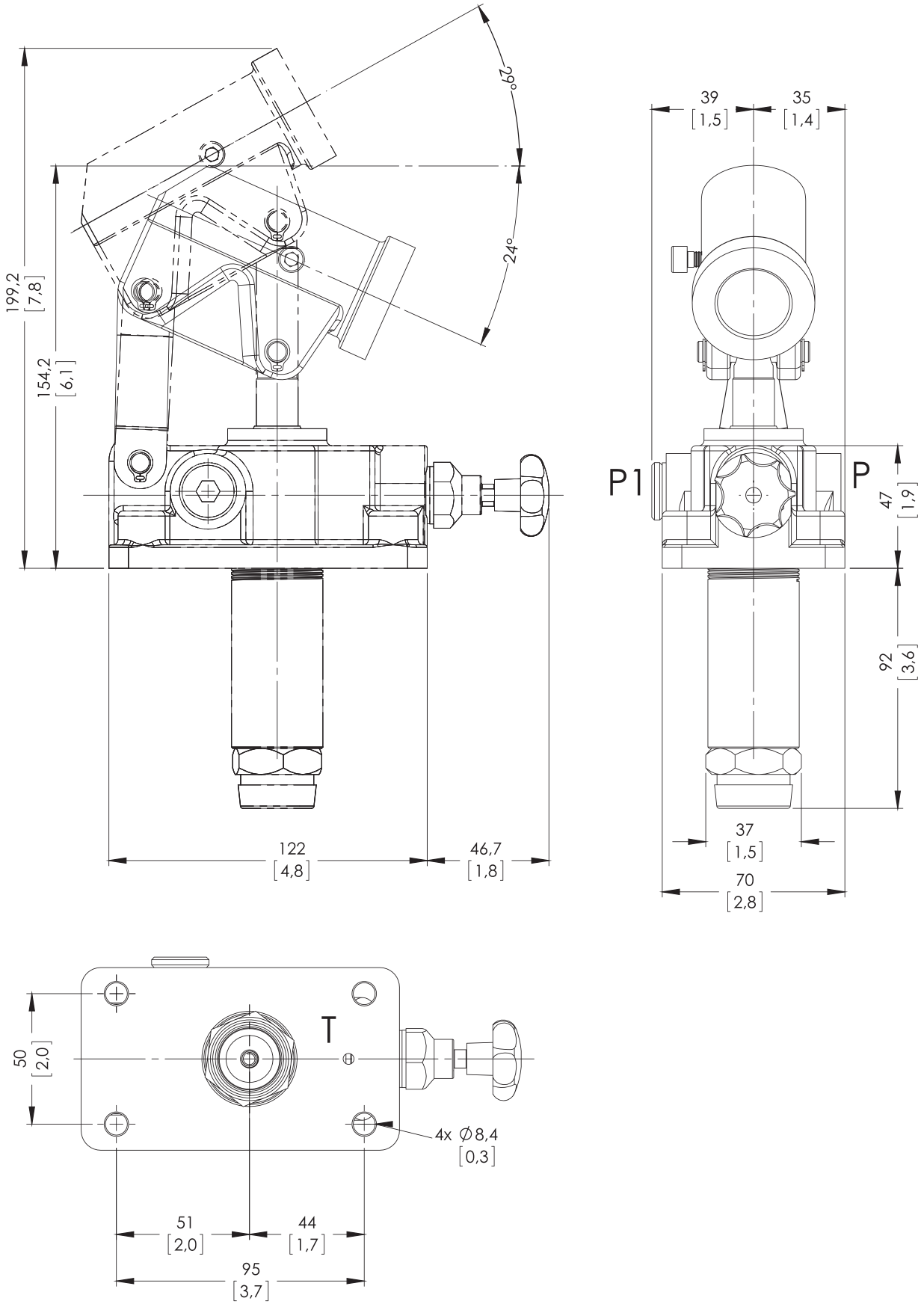

DIMENSIONAL DATA

CC 25 - CT 25 - Double Action Hand Pump

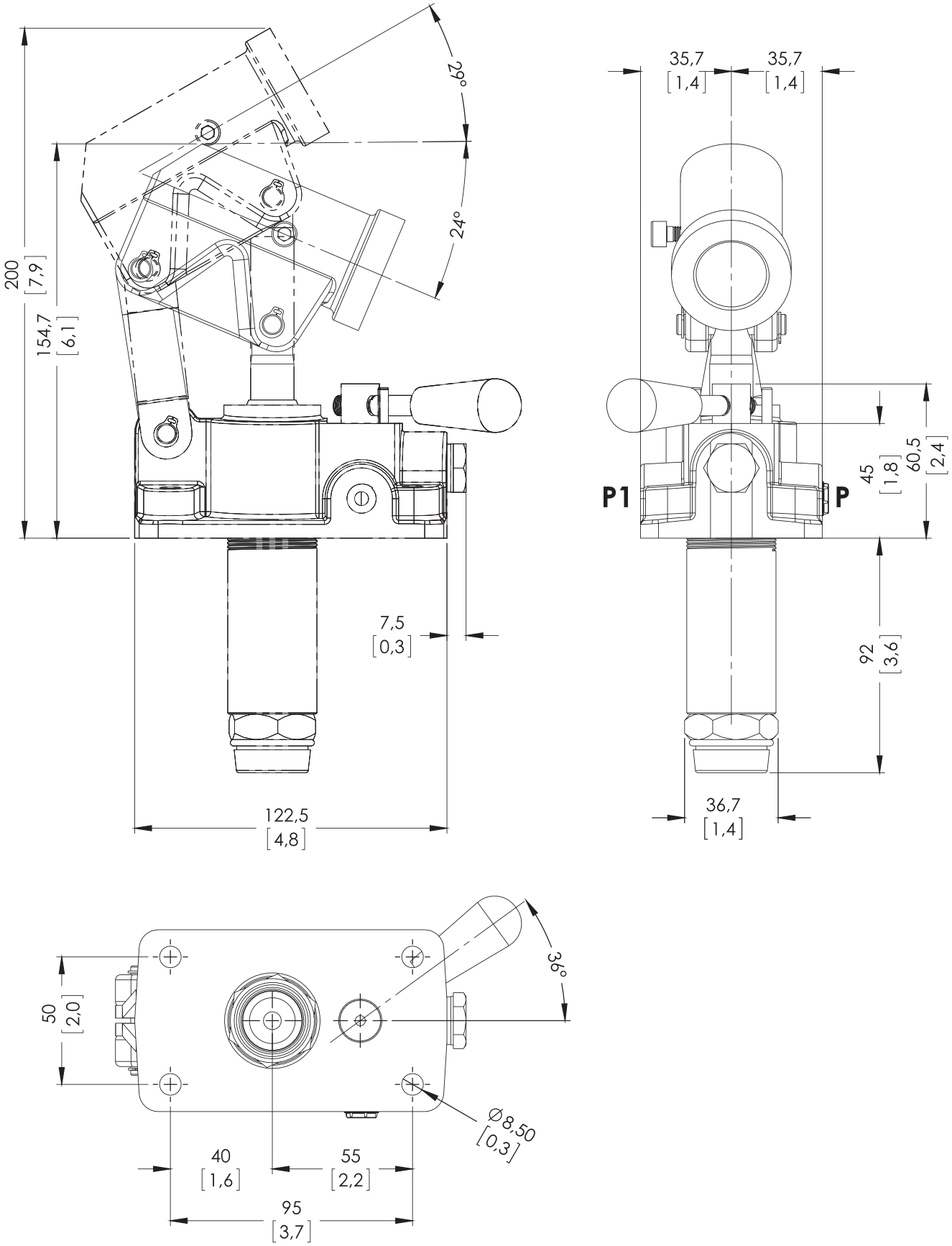

DIMENSIONAL DATA

RTC 25 - Single Action Hand Pump With Round Type

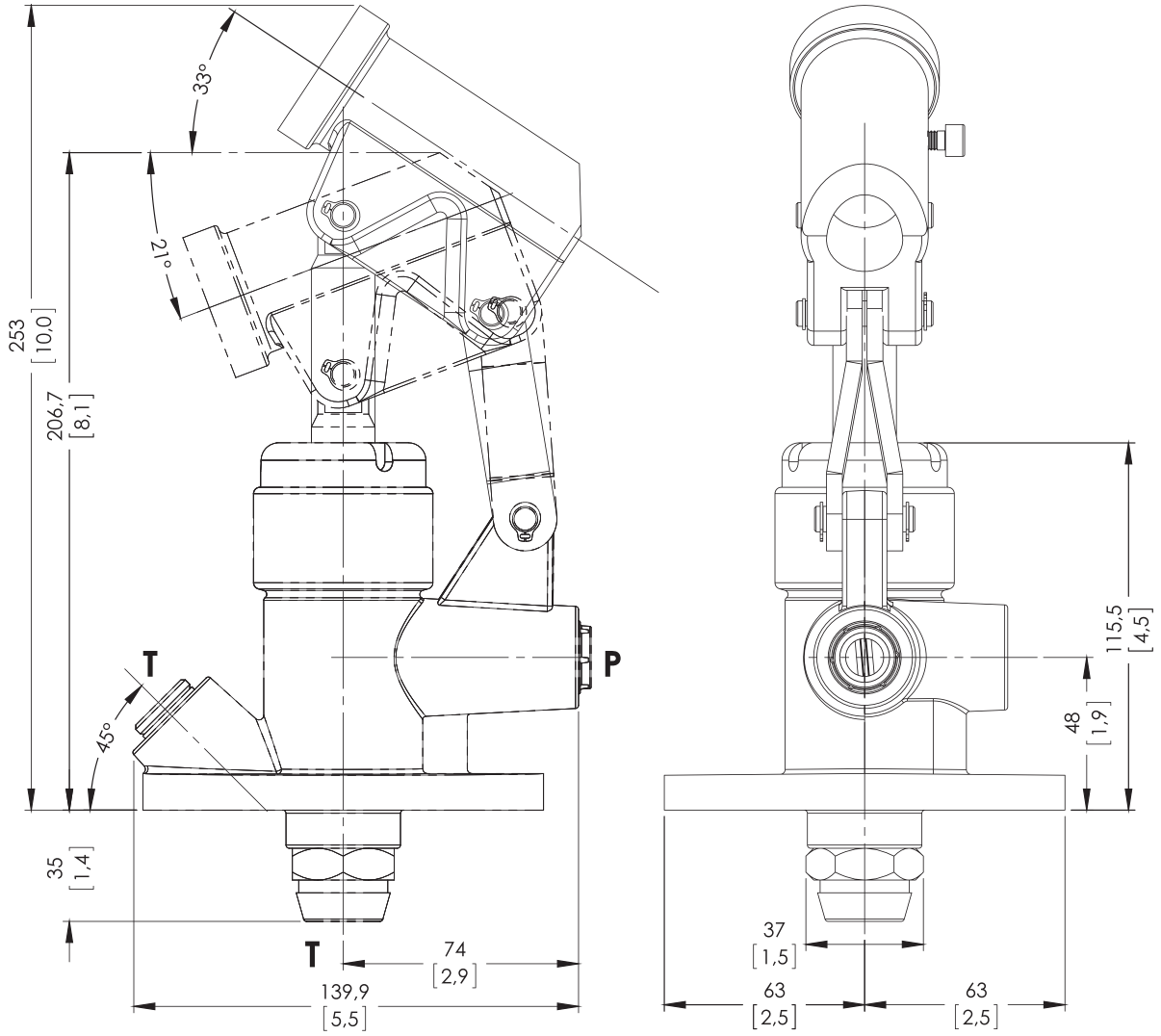

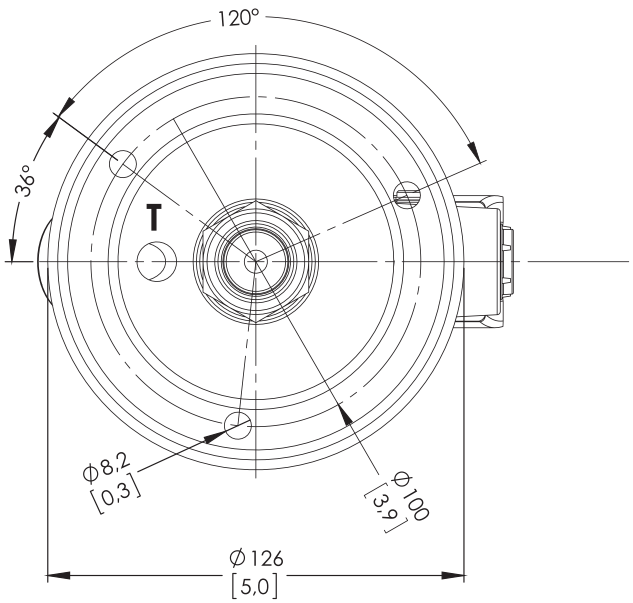

HYDRAULIC CIRCUIT

TT 25 - TC 25 - Single Action Hand Pump

Sectional Appearance

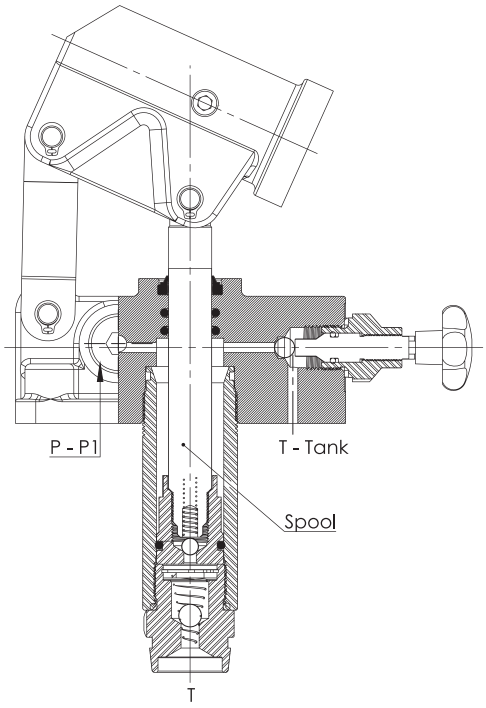

Diagram

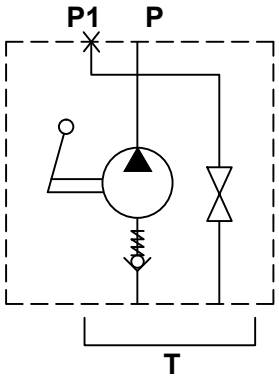

CC 25 - CT 25 - Double Action Hand Pump

Sectional Appearance

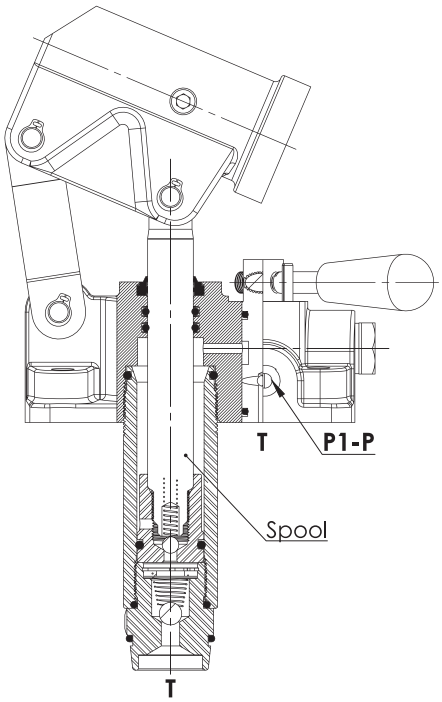

Diagram

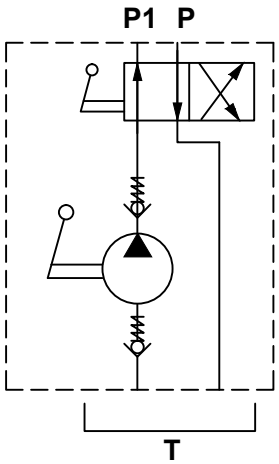

HYDRAULIC CIRCUIT

RTC 25 - Single Action Hand Pump With Round Type

Sectional Appearance

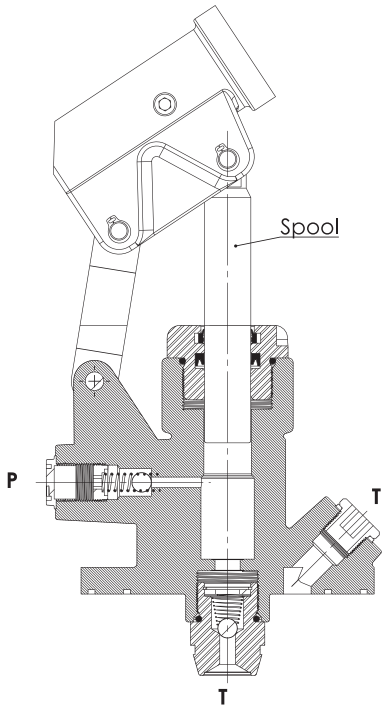

Diagram

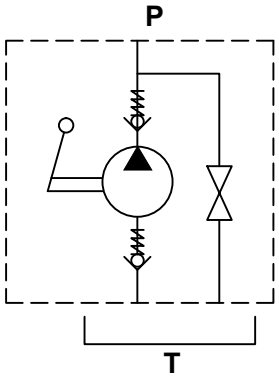

Performance Data and Curve

Force while pumping with standard lever (600 mm); Force and pressure table

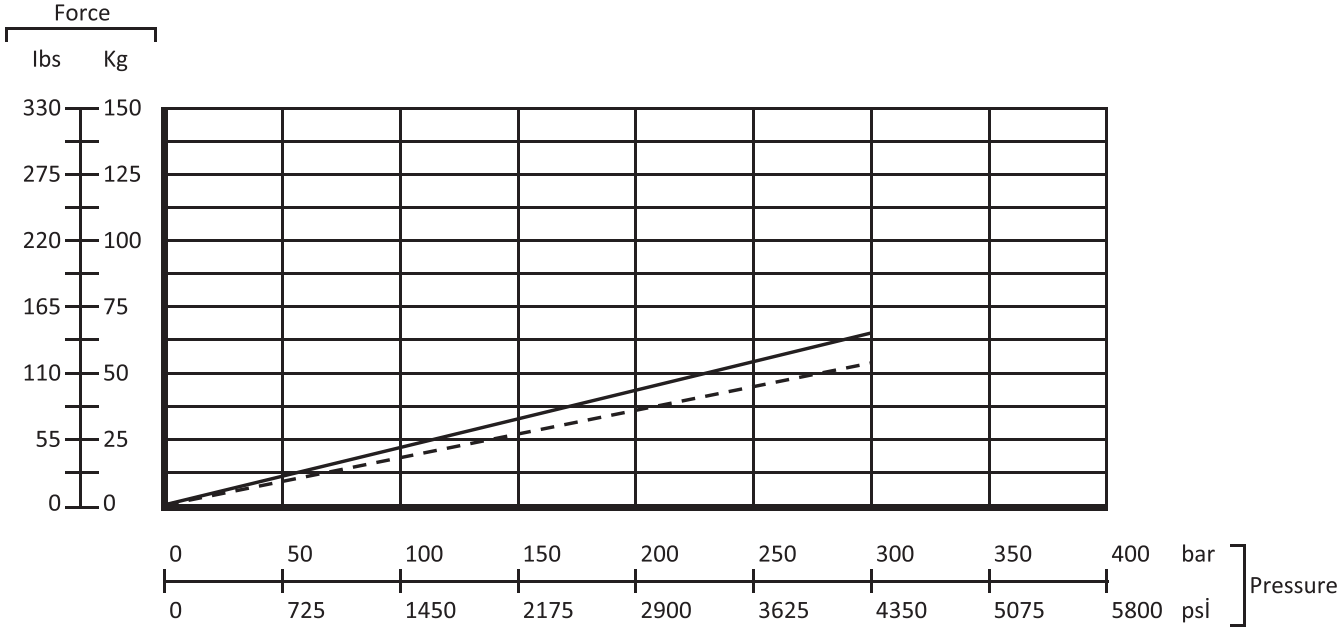

ORDERING CODES

Order Example

ORV TT - 25

- Base Code "0"
- Type
- Displacement

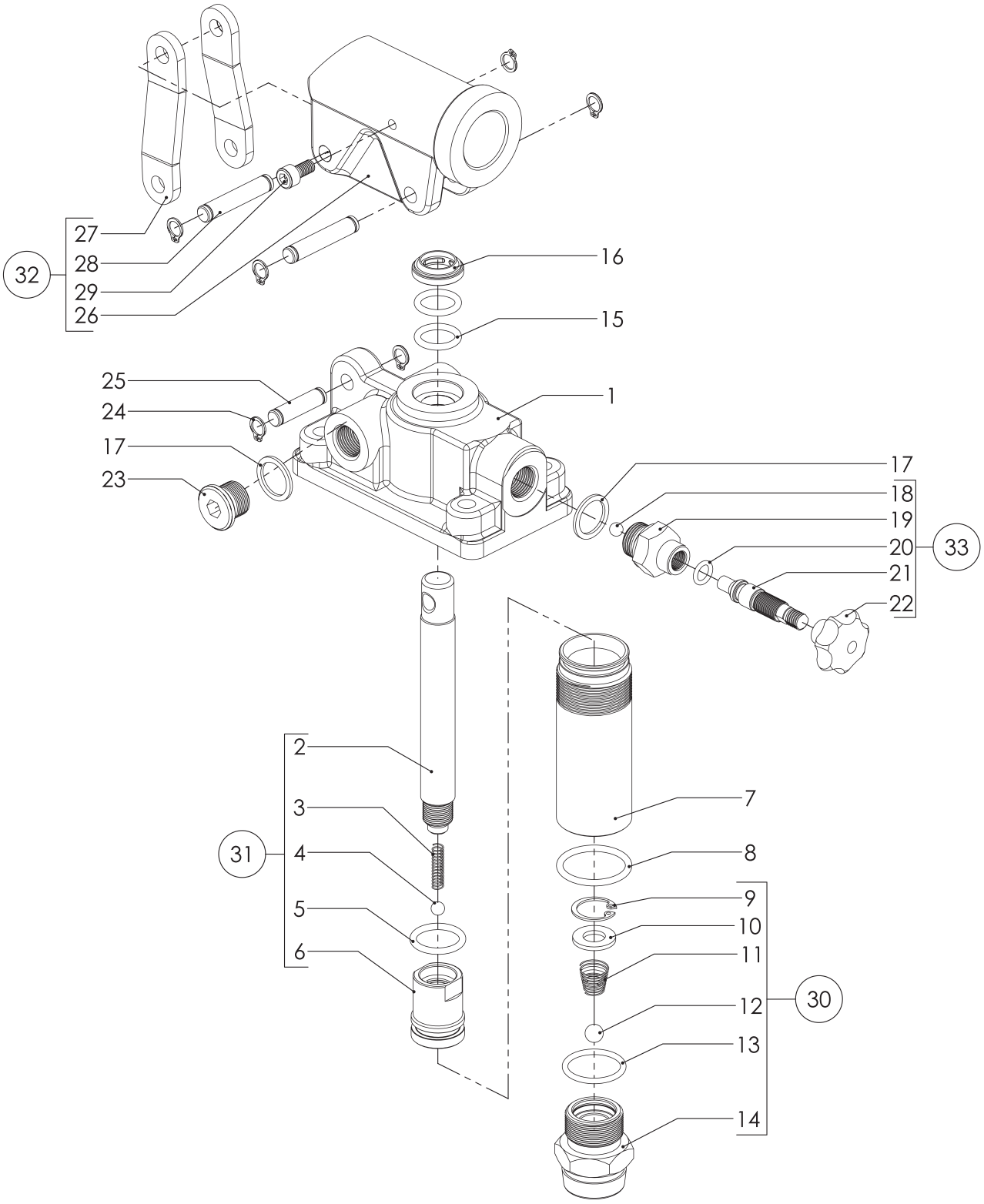

ORDERING CODES

Order Example

ORV CC - 25

Base Code "0"

Displacement

Type

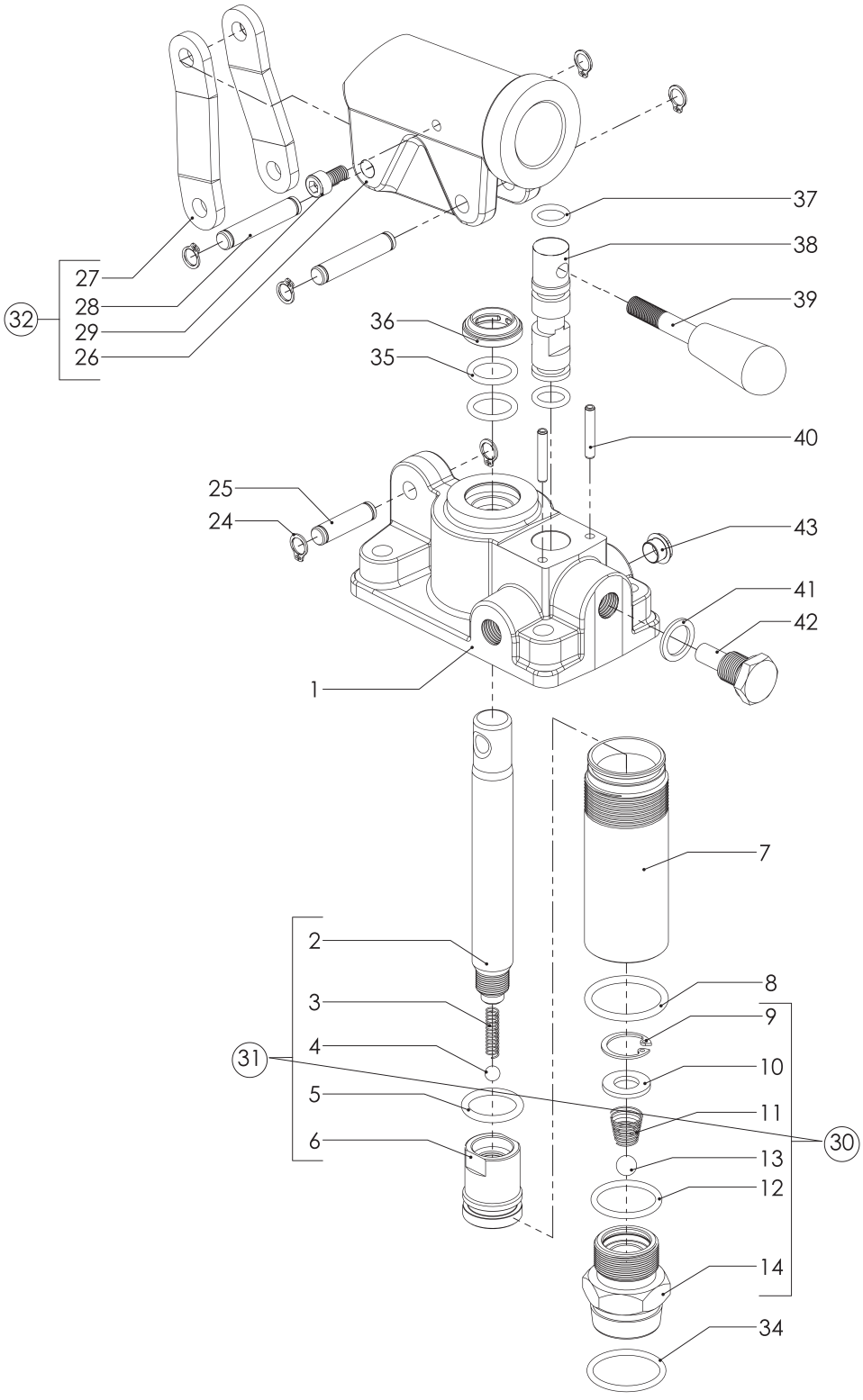

ORDERING CODES

Order Example

ORV RTC - 25

- Base Code "0"
- Type
- Displacement

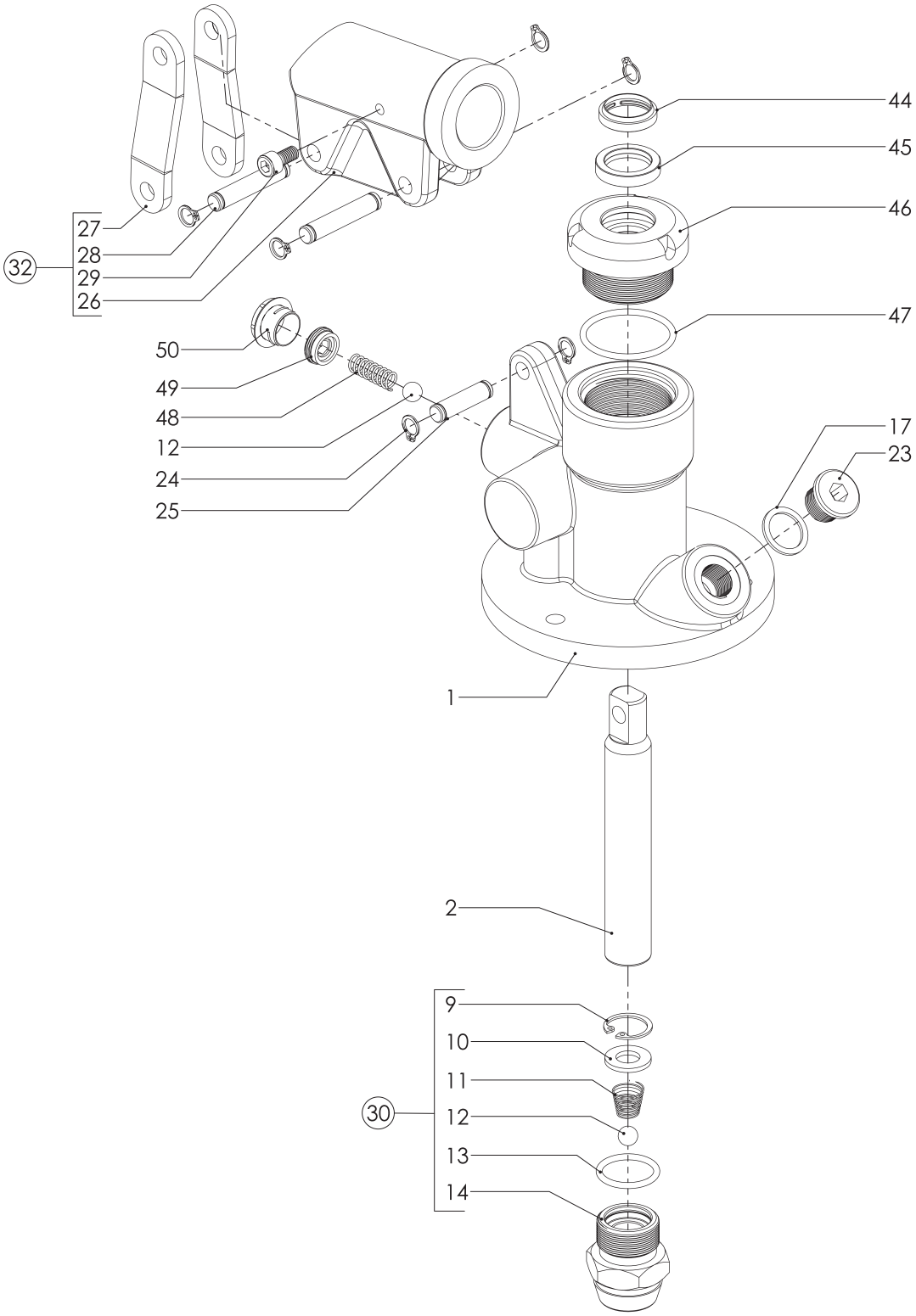

PART LIST

ITEM NO	TYPE			ORDER CODE	PART NAME	DESCRIPTION	QUANTITY
	TT-25	CC-25	RTC-25				
1a	x			1TE025100	Hand Pump Body		1
1b		x		1CE025100	Hand Pump Body		1
1c			x	1KCE025100	Hand Pump Body		1
2a	x			1TE025101	Rod		1
2b		x		1CE025101	Rod		1
2c			x	1KCE025101	Rod		1
3	x	x	x	1TE025102	Piston Spring		1
4	x	x	x	1TE025103	Piston Ball		1
5	x	x	x	1TE025104	O-ring	20x3	1
6	x	x	x	1TE025105	Piston		1
7	x	x	x	1TE025106	Steel Pipe		1
8	x	x	x	1TE025107	O-ring	29x3	1
9	x	x	x	1TE025108	Circlip	DIN472 - 20x1	1
10	x	x	x	1TE025109	Washer	M10	1
11	x	x	x	1TE02510	Suction Spring		1
12	x	x	x	1TE025111	Suction Ball		1
13	x	x	x	1TE025112	O-ring	24,5x2,58	1
14	x	x	x	1TE025113	Suction Valve Casing		1
15	x			1TE025114	O-ring	16x3	2
16	x			1TE025115	Wiper Seal	16x24x5/7	1
17	x		x	1TE025116	Washer	G 3/8"	2
18	x			1TE025117	Tank Ball		1
19	x			1TE025118	Tank Valve Casing		1
20	x			1TE025119	O-ring	8x2	1
21	x			1TE025120	Tank Pin		1
22	x			1TE025121	Knob		1
23	x		x	1TE025122	Plug	G 3/8"	1
24	x	x	x	1TE025123	Circlip	DIN 471 - 8x0,8	6
25	x	x	x	1TE025124	Short Pin		1
26	x	x	x	1TE025125	Lever Holder		1
27	x	x	x	1TE025126	Holder Bracket		2
28	x	x	x	1TE025127	Long Pin		2
29	x	x	x	1HP025101	Screw	DIN 912 - M6x12	1
30	x	x	x	1HP025102	Cylinder Group		
31	x	x	x	1HP025102	Piston Group		
32	x	x	x	1HP025103	Hinge Group		
33	x	x	x	1HP025104	Valve Group		
34		x		1CE025102	O-ring	23x2,5	1
35		x		1CE025103	O-ring	15,88x2,62	2
36		x		1CE025104	Wiper Seal	17x25x4x7	1
37		x		1CE025105	O-ring	11,3x2,4	2
38		x		1CE025106	Spool		1
39		x		1CE025107	Handle	M8	1
40		x		1CE025108	Spring Pin	ISO 8752 - 4x24	2
41		x		1CE025109	Washer	G 1/4"	1
42		x		1CE025110	Plug		1
43		x		1CE025111	Plastig Plug	G 1/4"	1
44			x	1KCE025102	Wiper Seal	20x25x4,3/6	1
45			x	1KCE025103	Rod Seal	20x28x5,5	1
46			x	1KCE025104	Rod Cover		1
47			x	1KCE025105	O-ring	36,17x2,62	1
48			x	1KCE025106	Tank Spring		1
49			x	1KCE025107	Tank Cover		1
50			x	1KCE025108	Plastig Plug	G 3/8"	1

TECHNICAL DATA

Ports Dimensional Data

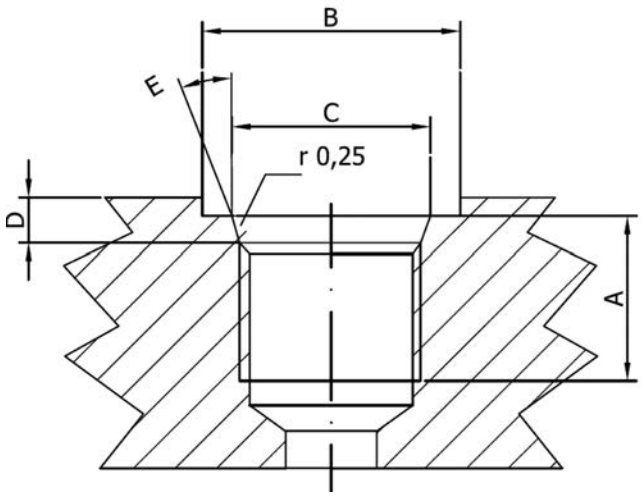

SAE UN-UNF (ISO 725)						
Dimensions		7/8-14 UNF SAE10		1"1/16-12 UN SAE12		1"5/16-12 UN SAE16	
mm	in						
A		17	0,67	20	0,79	20	0,79
B		34	1,34	41	1,61	49	1,92
C		23,9	0,94	29,2	1,15	35,5	1,40
D		2,5	0,10	3,3	0,13	3,3	0,13
E		15°		15°		15°	

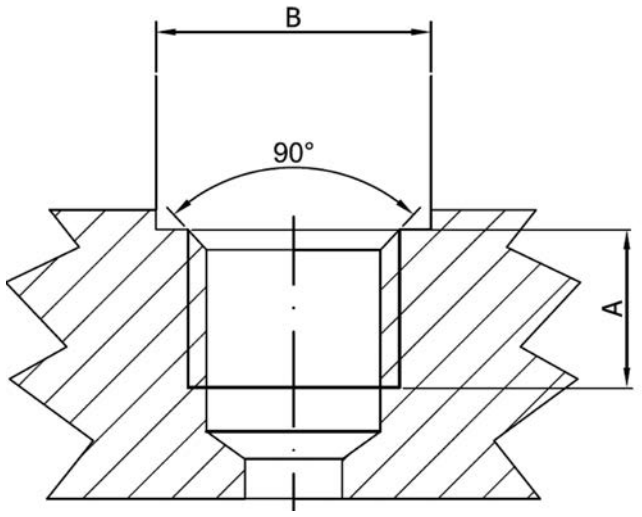

BSP (ISO 228)						
Dimensions		G 1/2"		G 3/4		G1	
mm	in						
A		16	0,63	18	0,71	20	0,79
B		27	1,06	33	1,30	40	1,57

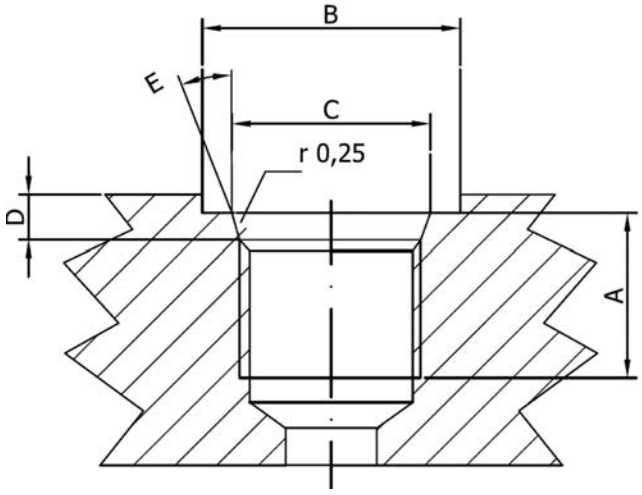

METRIC (ISO 262)					
Dimensions		M22x1,5 ISO 262		M27x2 ISO 262	
mm	in				
A		16	0,63	18	0,71
B		31,5	1,24	37,7	1,48

ORVAL HYDRAULIC

ORV HP



ORVAL HYDRAULIC

THREE WAY VALVES ORV-V



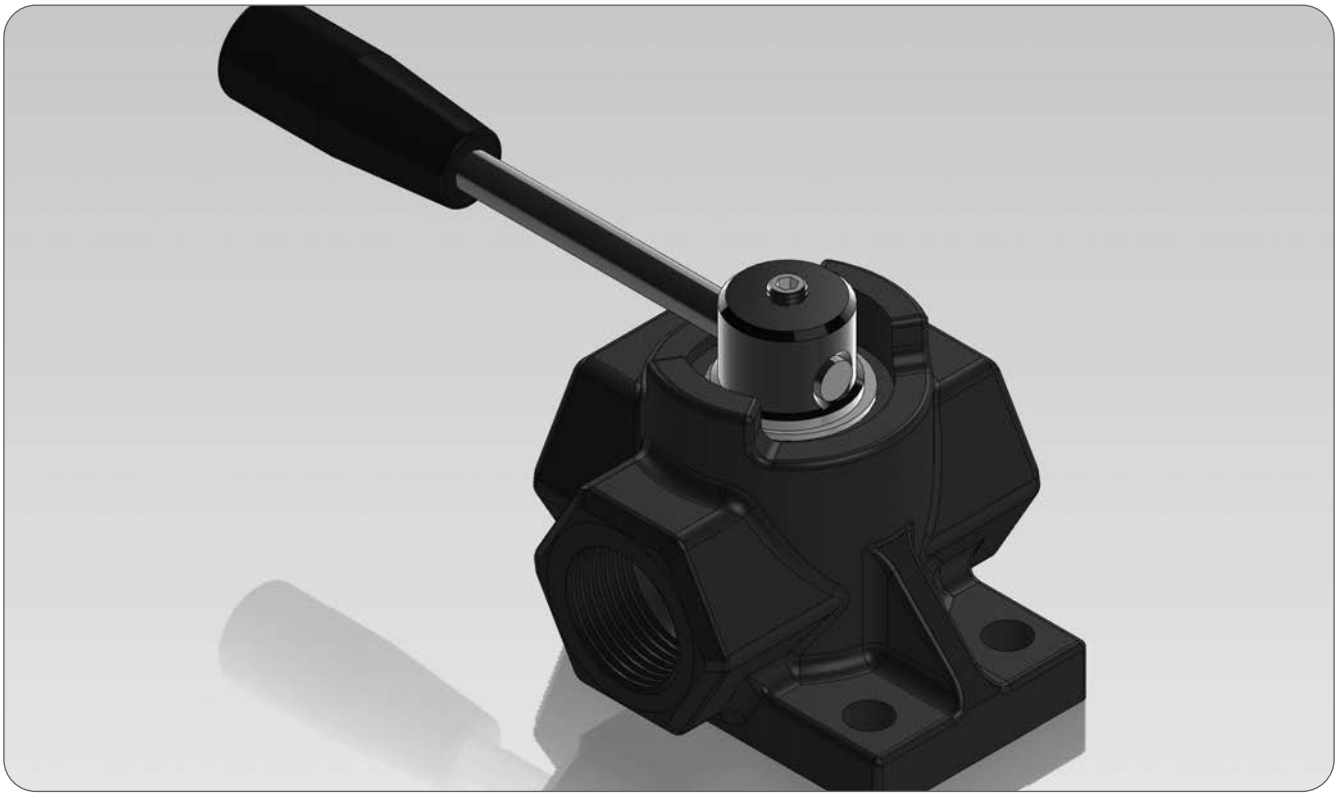

CONTENTS

Working Conditions	3
Dimensional Data	3
Dimensional Data	3
Ordering Codes	3
Technical Data	3

Additional Informations

Note: This catalog shows the product in the most standard configurations. For Other Configurations, more detailed information or special request, Please contact Customer Service Dept.

Warning! :All specifications of this catalog refer to the standard product at this date (03/2013) . ORVAL, oriented to a continuous improvement, reserves the right to discontinue, modify or revise the specifications, without notice.

ORVAL IS NOT RESPONSIBLE FOR ANY DAMAGE CAUSED BY
AN INCORRECT USE OF THE PRODUCT.

WORKING CONDITIONS

MODEL	V60	V90	V140	V200
Nominal Flow Rating / Displacement	60 l/min 21 U.S.G.P.M	90 l/min 21 U.S.G.P.M	140 l/min 21 U.S.G.P.M	200 l/min 21 U.S.G.P.M
Maximum Operating Pressure	315 Bar 4600 PSI	315 Bar 4600 PSI	315 Bar 4600 PSI	250 Bar 3600 PSI
Number of Available Ways	3	3	3	3
Oil Temperture with NBR Seals	-20 to 80 C° (-4 to 176 F °)			
with FPM (Viton) Seals	-20 to 100 C° (-4 to 212 F °)			
Oil Viscosity – Operating Range Minumum / Maximum	From 10 to 75 mm2/s - 10 / 400 mm2/s From 10 to 75 cSt - 10 / 400 cSt			
Oil Filtration	≤30 µ			
Ambiant Temperture Range	-35 to 60 C° - (-31 to 140 F °)			
İnternal Leakage (at 100 bar (1450 PSI), 40C° (110 F°), 46 cSt – A(B)—T)	3 cm3/min 0,18 in3/min			
Max. Level Of Contamination	19/16 - ISO 4406			

Not: This catalogue shows technical specifications measured with mineral oil of 46 mm2/s-46 cSt viscosity at 40 C° temparture. V Rotary spool diverter valve position cannot be changed when valve is pressurized.

PORTS THREADS AND STANDARD THREADS

MODEL	BSP (Iso 228)	UN-UNF (Iso 11926-1)	Metric (Iso 262)
V 60	G 3/8	3/4 - 16 UNF	M18x1.5
V 90	G 1/2	7/8 - 14 UNF	M22x1,5
V 140	G 3/4	1 1/16 – 12 UNF	M27x2
V 200	G 1	1 5/16 – 12 UNF	-

DIMENSIONAL DATA

3 – Way V 60/3 valve

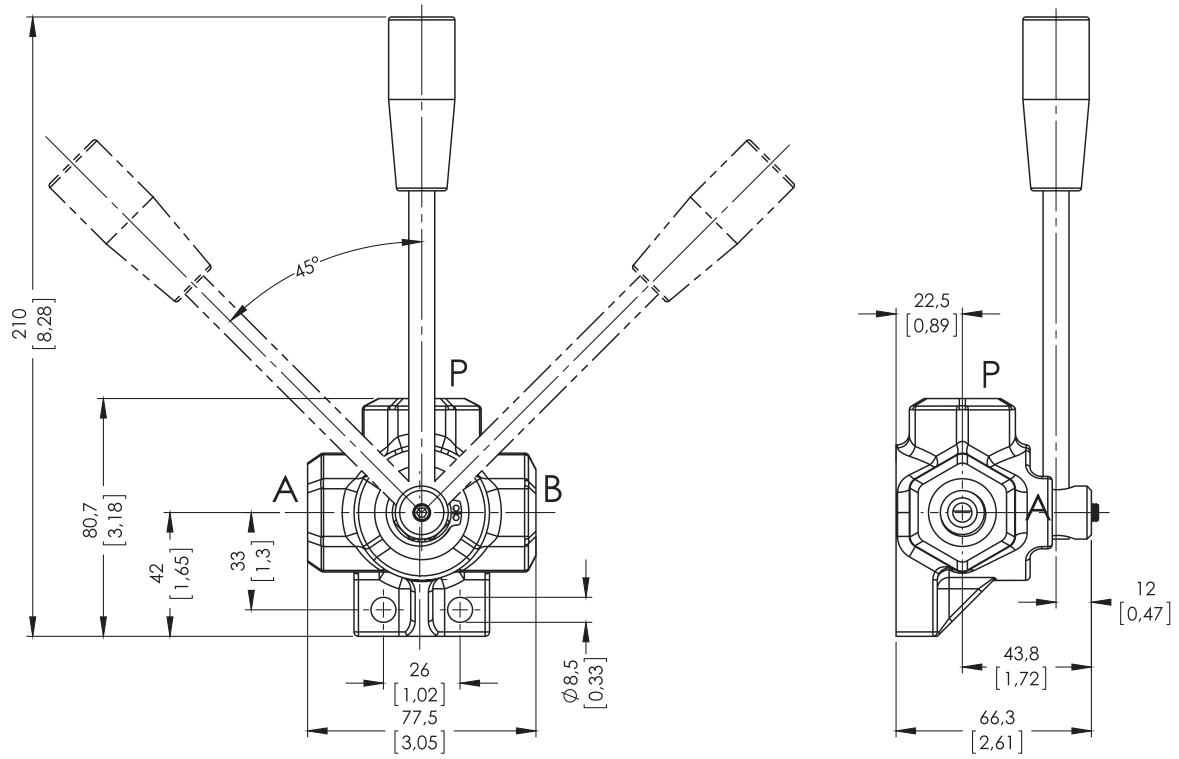

3 – Way V 90/3 valve

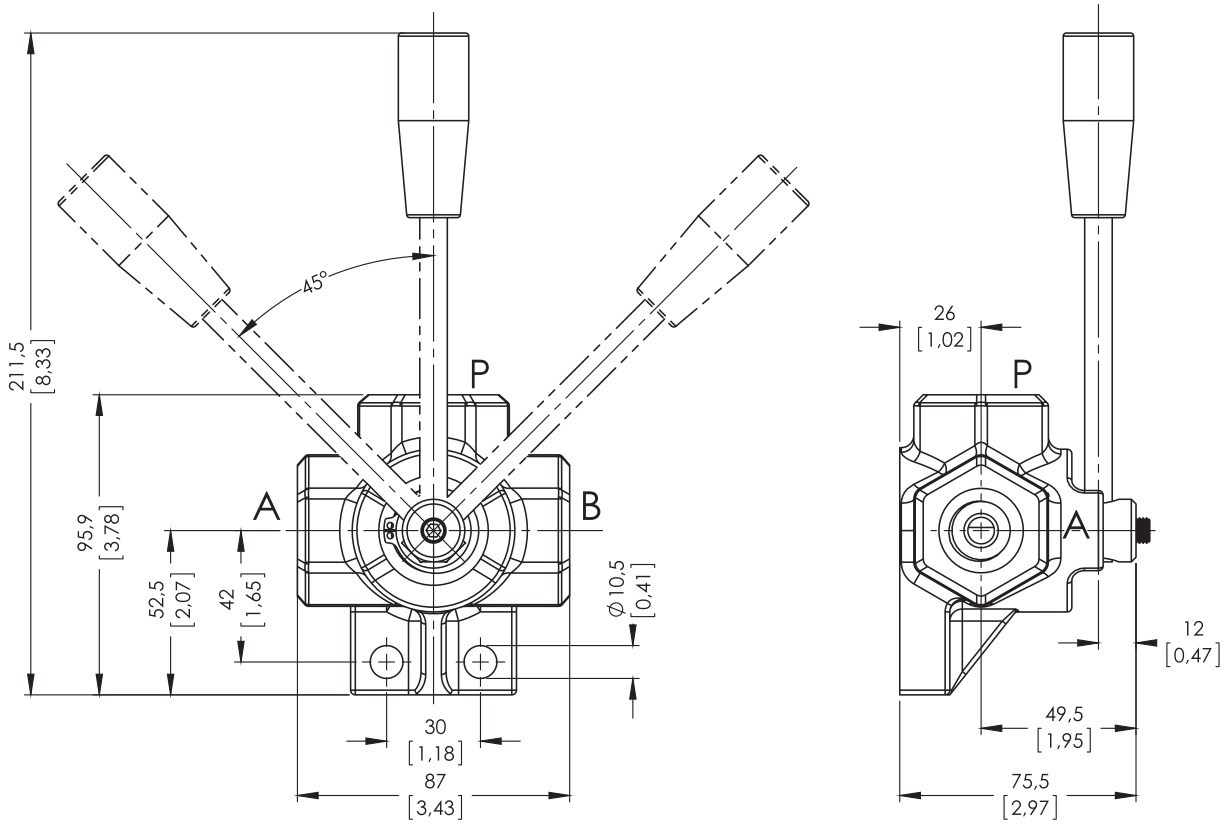

DIMENSIONAL DATA

3 – Way V 140/3 valve

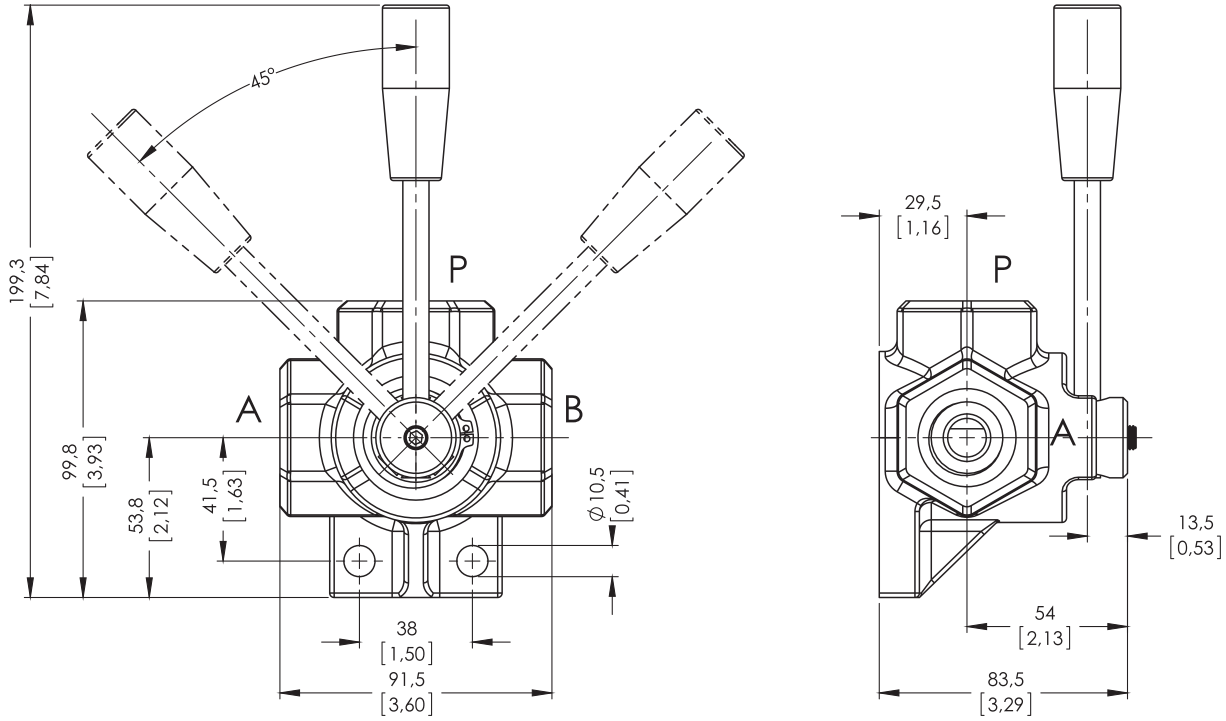

3 – Way V 200/3 valve

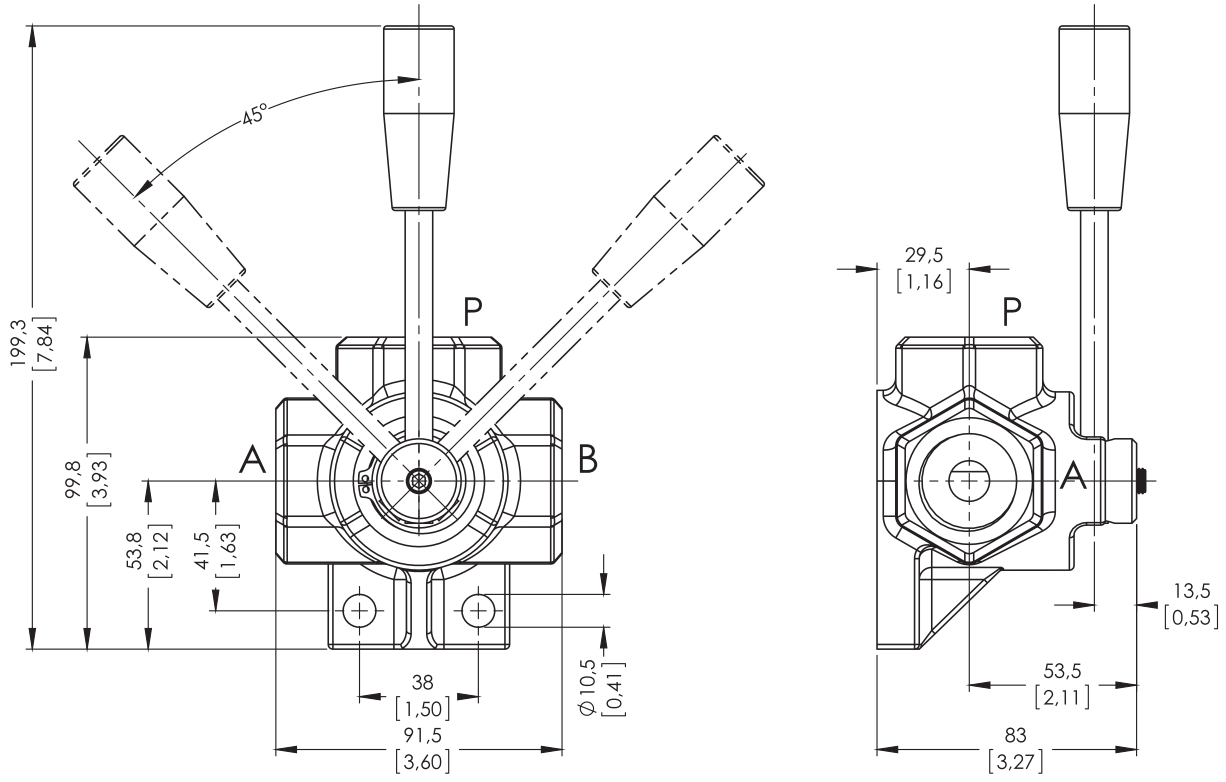

HYDRAULIC CIRCUIT

3-Way valve - (V Series)

Spool type **A**

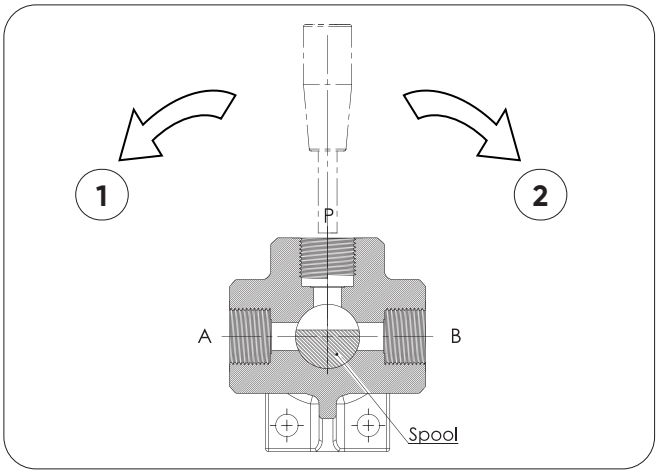

Spool type **B**

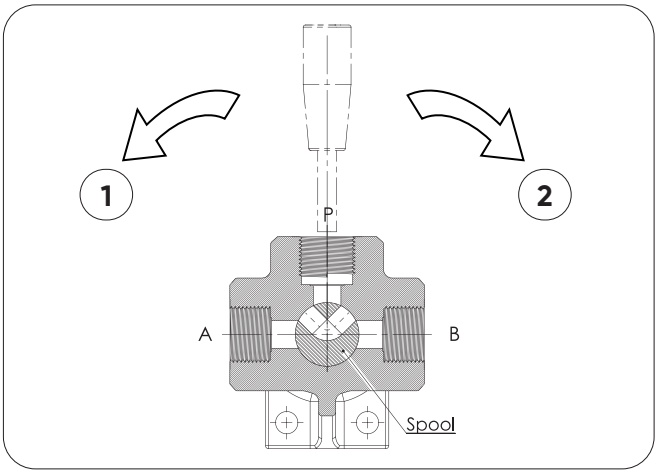

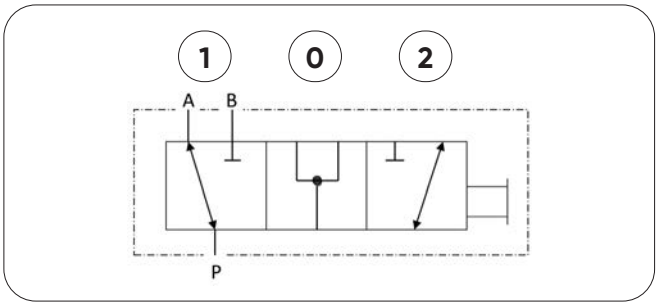

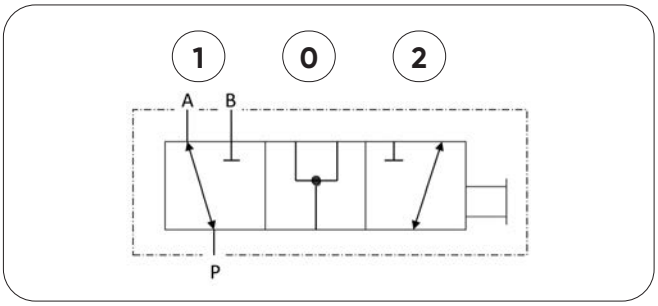

Performance Data And Curve

Pressure drop versus flow P → A (B): spool in position 1 (2)

V60

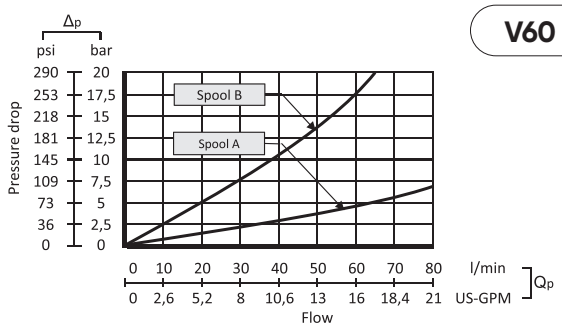

V90

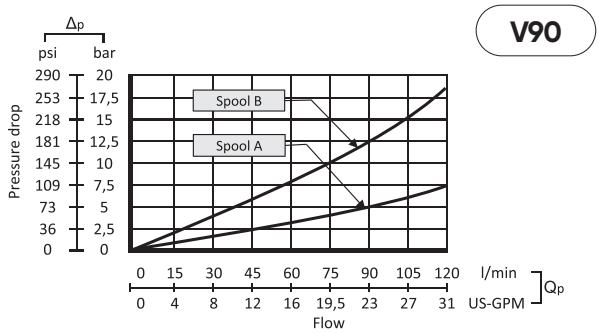

V140

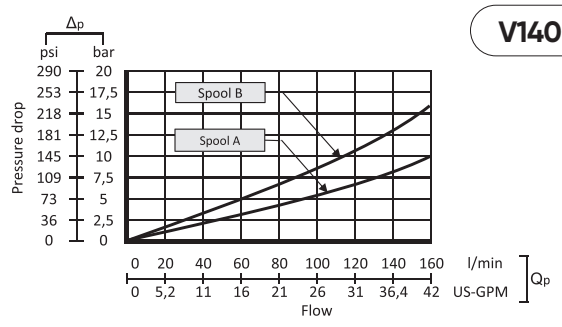

V200

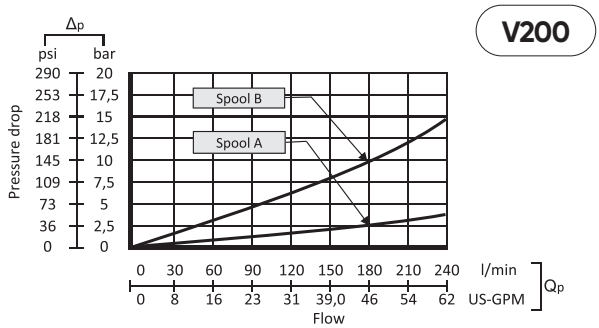

ORDERING CODES

Order Example

ORV V140 / 3 - A

Base Code "0" — 1 — 2 — N. of ways

1- Body

V 60	= 3/8" Output – 60 lt Body	(1BV60100)
V 90	= 1/2" Output – 90 lt Body	(1BV90100)
V 140	= 3/4" Output – 140 lt Body	(1BV140100)
V 200	= 1" Output – 200 lt Body	(1BV20 0100)

2- Spool

V60 -A = Open Center	(2O60100)
V60 - B = Closed Center	(2C60100)
V90 - A = Open Center	(2O90100)
V90 - B = Closed Center	(2C90100)
V140/V200 - A = Open Center	(2O140100)
V140/V200 - B = Closed Center	(2C140100)

3-4 O-ring

V60 Series 16x3 and 20x3 O-rings	(3SO60100)
V90 Series 19x3 and 24x3 O-rings	(3SO90100)
V140 Series 25x3 and 30x3 O-rings	(3SO14100)
V200 Series 25x3 and 30x3 O-rings	(3SO20100)

5- Circlip

V60 Series 20x1,2	(3SO80100)
V90 Series 24x1,2	(3TO80100)
V140 Series 30x1,5	(3TCO80100)
V200 Series 30x1,5	(3TCO80100)

6-7- HandLevel

L = Standard HandLever (L=120mmxM8) - (7L040100)

8-V60 Series = M6x10	(8S060100)
V90, V140, V200 = M8x200	(8S090100)

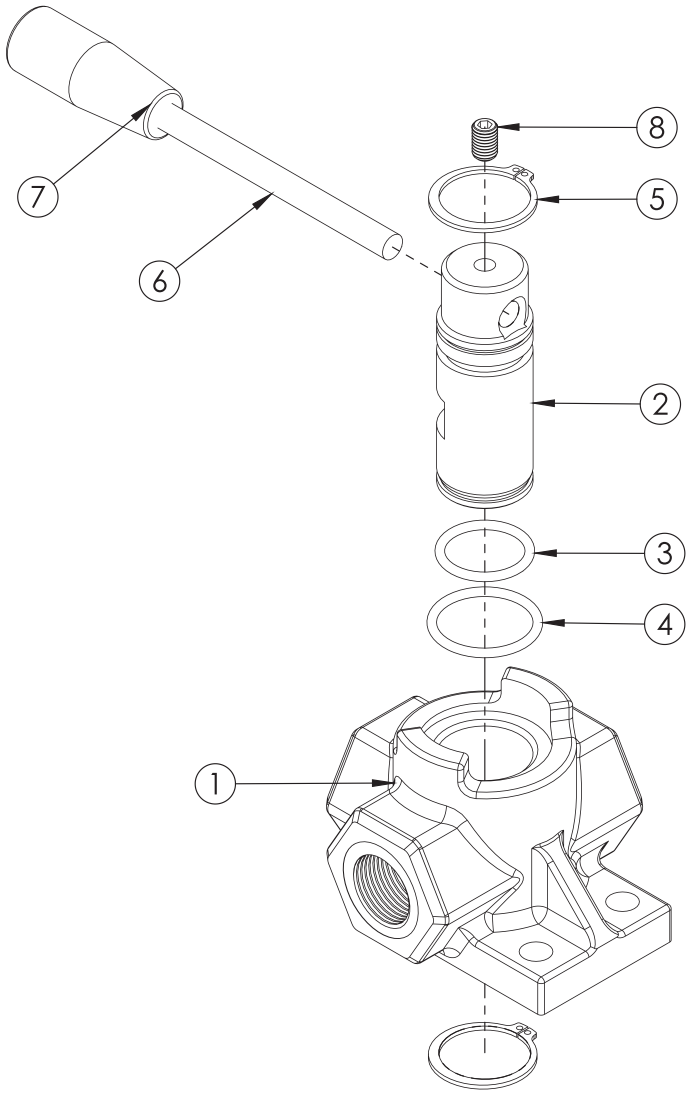

TECHNICAL DATA

Ports Dimensional Data

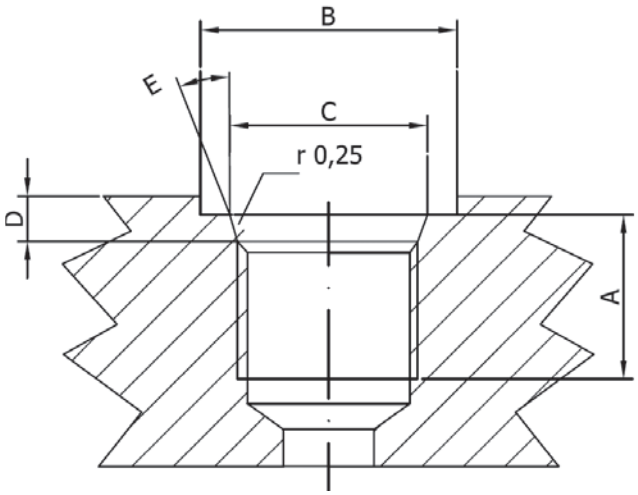

SAE UN-UNF (ISO 725)						
Dimensions		7/8-14 UNF SAE10		1"1/16-12 UN SAE12		1"5/16-12 UN SAE16	
mm	in						
A		17	0,67	20	0,79	20	0,79
B		34	1,34	41	1,61	49	1,92
C		23,9	0,94	29,2	1,15	35,5	1,40
D		2,5	0,10	3,3	0,13	3,3	0,13
E		15°		15°		15°	

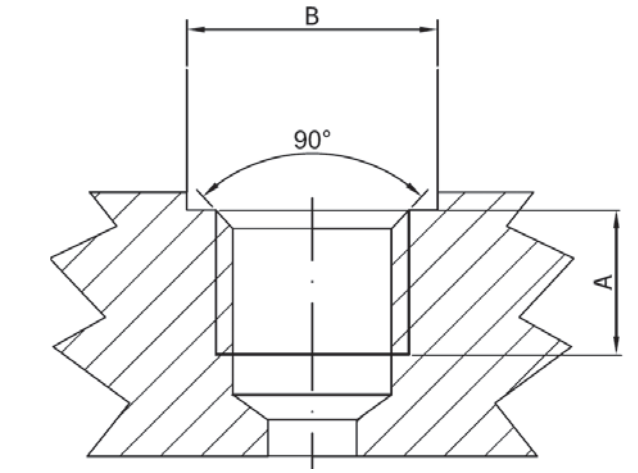

BSP (ISO 228)						
Dimensions		G 1/2"		G 3/4		G 1	
mm	in						
A		16	0,63	18	0,71	20	0,79
B		27	1,06	33	1,30	40	1,57

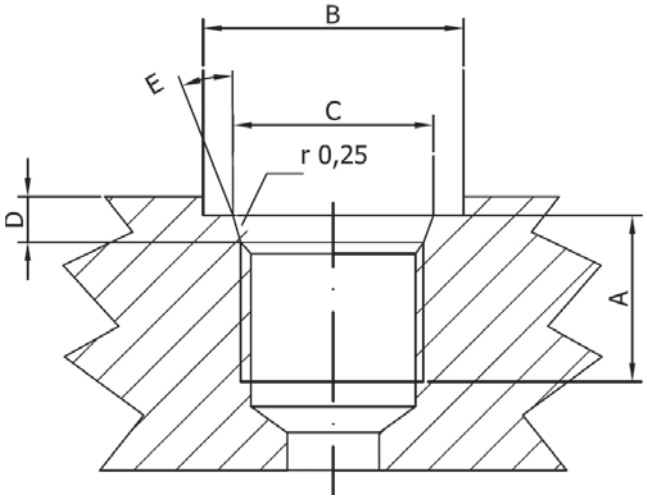

METRIC (ISO 262)					
Dimensions		M22x1,5 ISO 262		M27x2 ISO 262	
mm	in				
A		16	0,63	18	0,71
B		31,5	1,24	37,7	1,48

ORVAL HYDRAULIC

ORIGINAL VALVE



orval.com.tr

ORIGINAL VALVE

ORVAL HYDRAULIC

Büsan Org. San. Fevzi Çakmak Mah. Kosgeb Cad.
10641. Sk. No: 37 Karatay/KONYA/TÜRKİYE

+90 332 **345 29 29** +90 332 **345 29 23**

satis@**orval**.com.tr bilgi@**orval**.com.tr